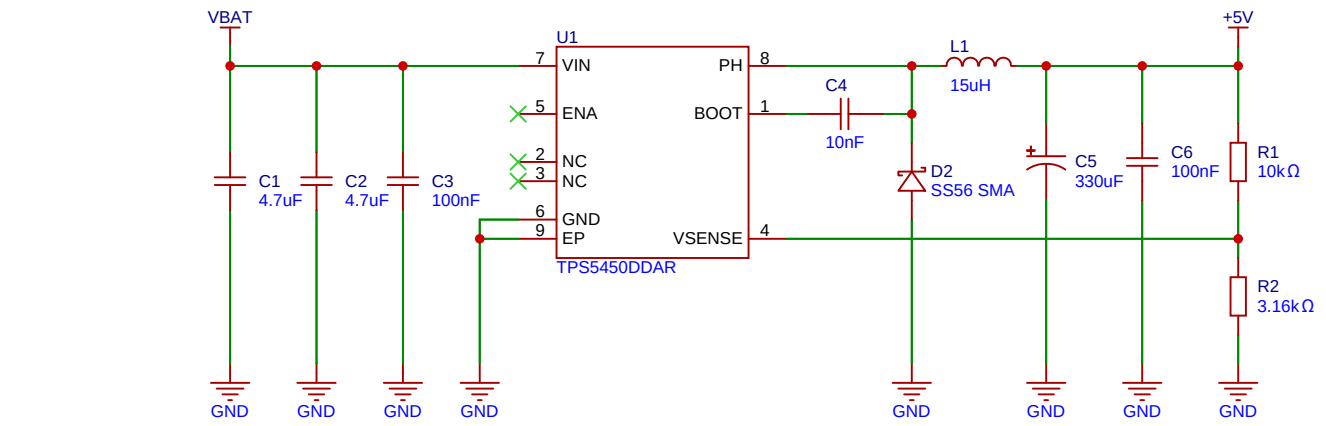

DC-DC BUCK 2S~9S

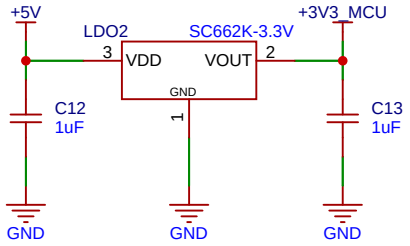

3V3 To MCU

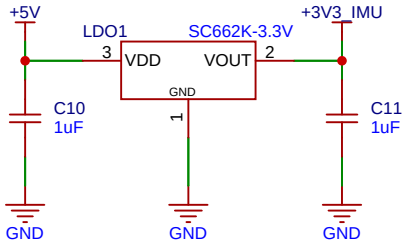

3V3 To IMU

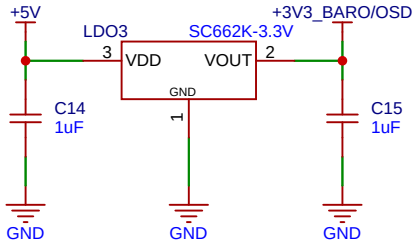

3V3 To Baro&OSD

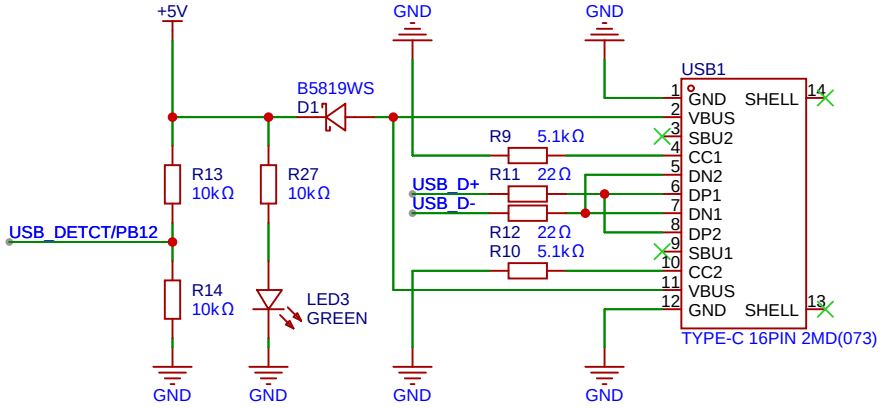

Type-C

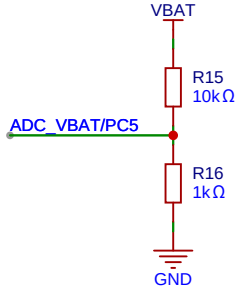

ADC From VBT

VBT 2S~9S →	DC DC VBT→5V →	→LDO_MCU	→MCU、SD、SBUS
		→LDO_IMU	→IMU
		→LDO_BARO/OSD	→BARO、OSD
	↑ Type-C +5V		

电流路径

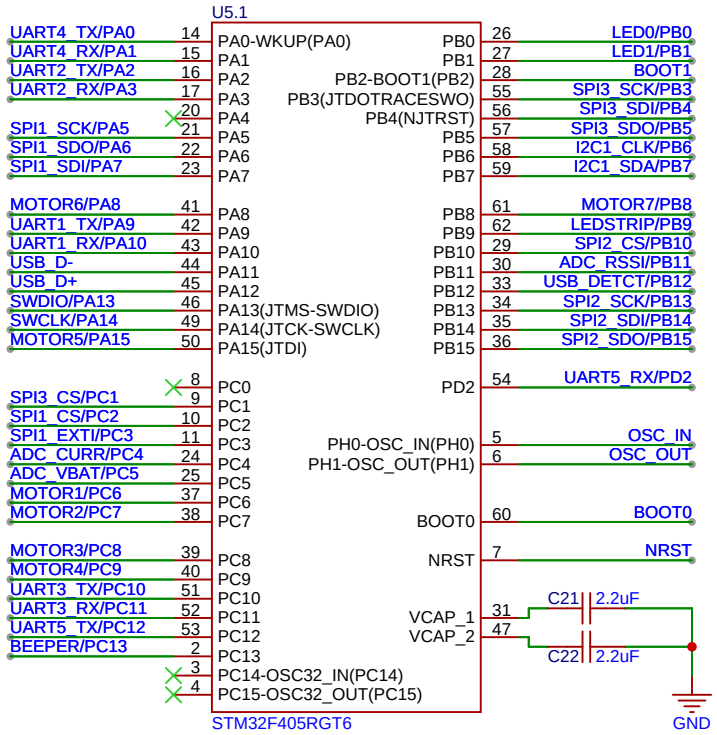

MCU

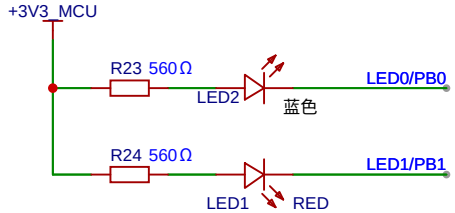

LEDS

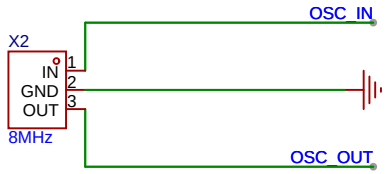

HSE 8MHz

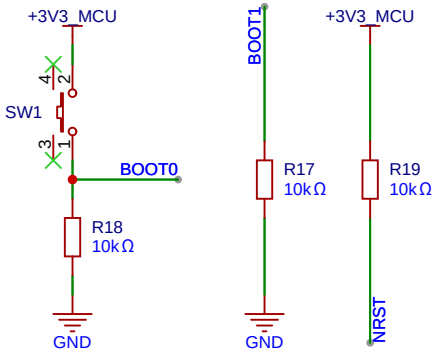

BOOT

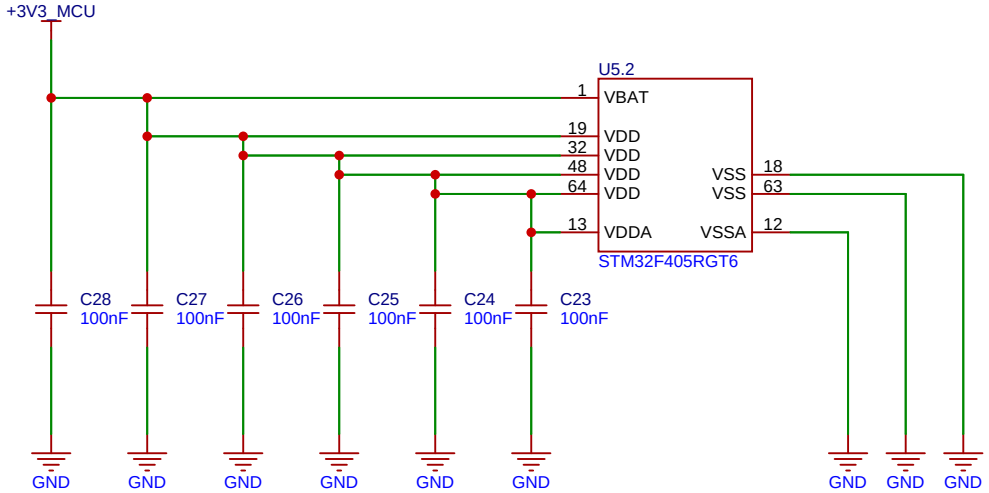

CAPS

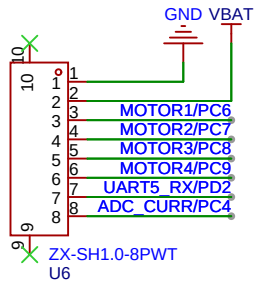

4To1 ESC

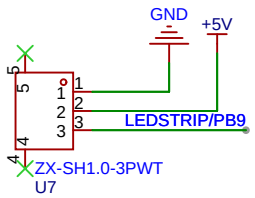

WS2812

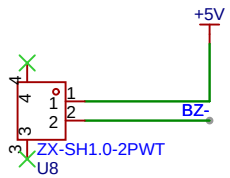

BEEPER

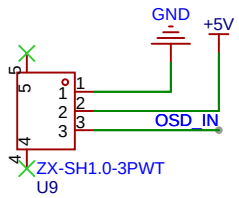

CAM

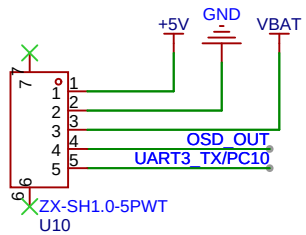

VTX

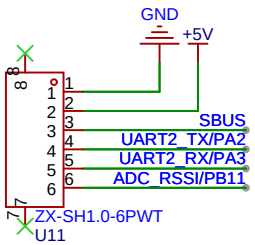

RECEIVER

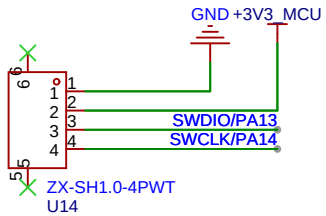

DOWNLOAD

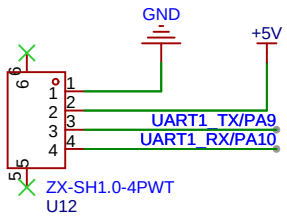

GPS

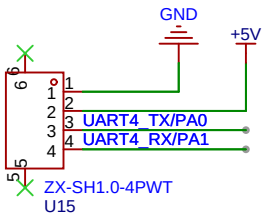

UART4

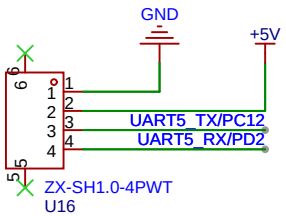

UART5

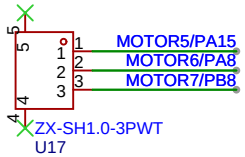

Motor5~7

UART1 --> GPS √
UART2 --> SBUS / TBS √
UART3 --> VTX √ RX未使用
UART4 --> 空闲
UART5 --> ESC √ 空闲

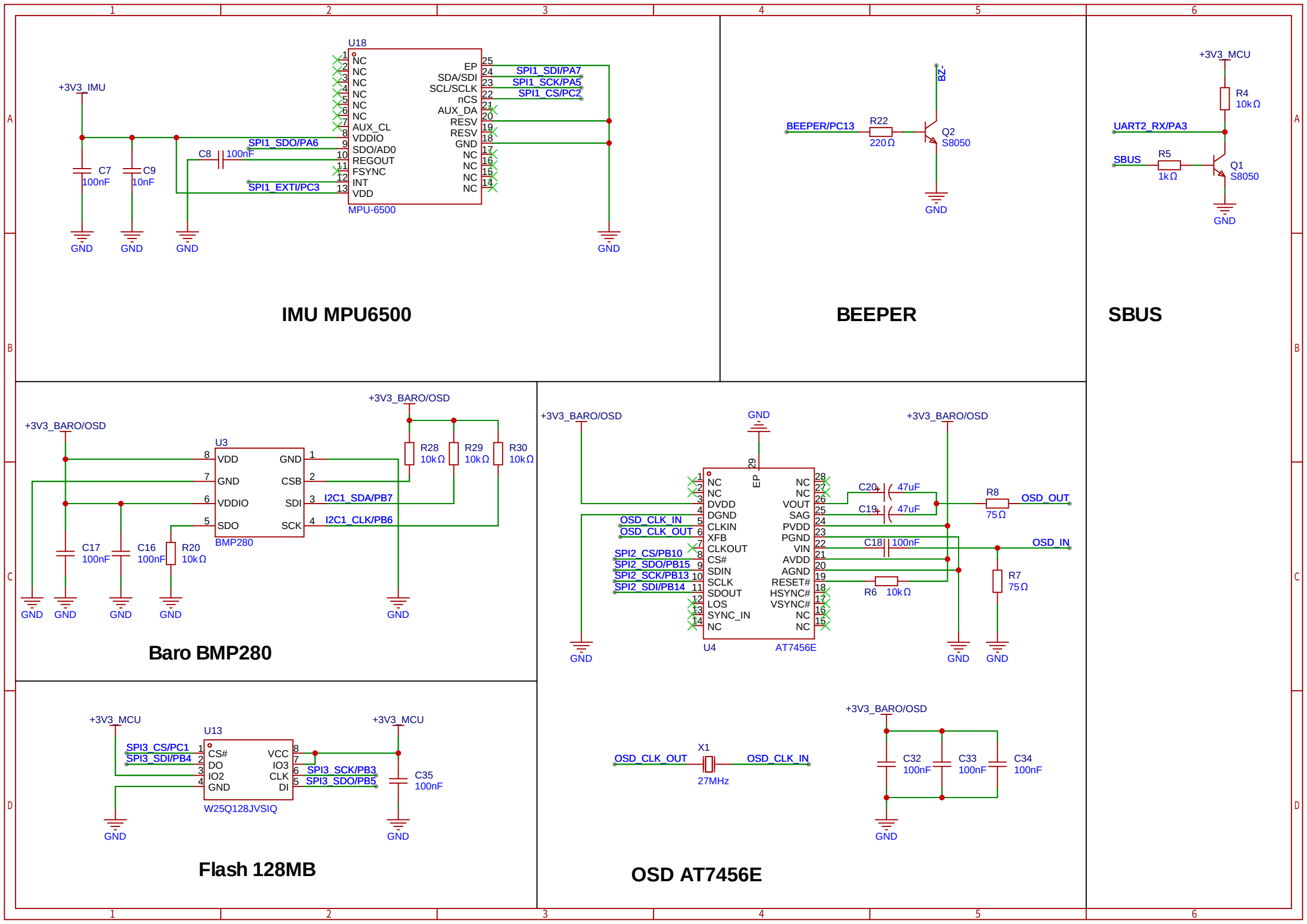
U18
MPU-6500
+3V3_IMU
C7 100nF
C9 10nF
C8 100nF
SPI1_SDO/PA6
SPI1_EXTI/PC3
SPI1_SDI/PA7
SPI1_SCK/PA5
SPI1_CS/PC2
NC
AUX_CL
VDDIO
SDO/AD0
REGOUT
FSYNC
INT
VDD
EP
SDA/SDI
SCL/SCLK
nCS
AUX_DA
RESV
GND
IMU MPU6500
BZ-
BEEPER/PC13
R22 220Ω
Q2 S8050
BEEPER
+3V3_MCU
R4 10kΩ
UART2_RX/PA3
SBUS
R5 1kΩ
Q1 S8050
SBUS
+3V3_BARO/OSD
U3
BMP280
VDD
GND
VDDIO
SDO
CSB
SDI
SCK
I2C1_SDA/PB7
I2C1_CLK/PB6
R28 10kΩ
R29 10kΩ
R30 10kΩ
C17 100nF
C16 100nF
R20 10kΩ
Baro BMP280
U4
AT7456E
EP
DVDD
DGND
CLKIN
XFB
CLKOUT
CS#
SDIN
SCLK
SDOUT
LOS
SYNC_IN
VOUT
SAG
PVDD
PGND
VIN
AVDD
AGND
RESET#
HSYNC#
VSYNC#
OSD_CLK_IN
OSD_CLK_OUT
SPI2_CS/PB10
SPI2_SDO/PB15
SPI2_SCK/PB13
SPI2_SDI/PB14
C20 47uF
C19 47uF
C18 100nF
R6 10kΩ
R8 75Ω
R7 75Ω
OSD_OUT
OSD_IN
X1 27MHz
C32 100nF
C33 100nF
C34 100nF
OSD AT7456E
U13
W25Q128JVSIQ
CS#
DO
IO2
VCC
IO3
CLK
DI
SPI3_CS/PC1
SPI3_SDI/PB4
SPI3_SCK/PB3
SPI3_SDO/PB5
C35 100nF
Flash 128MB