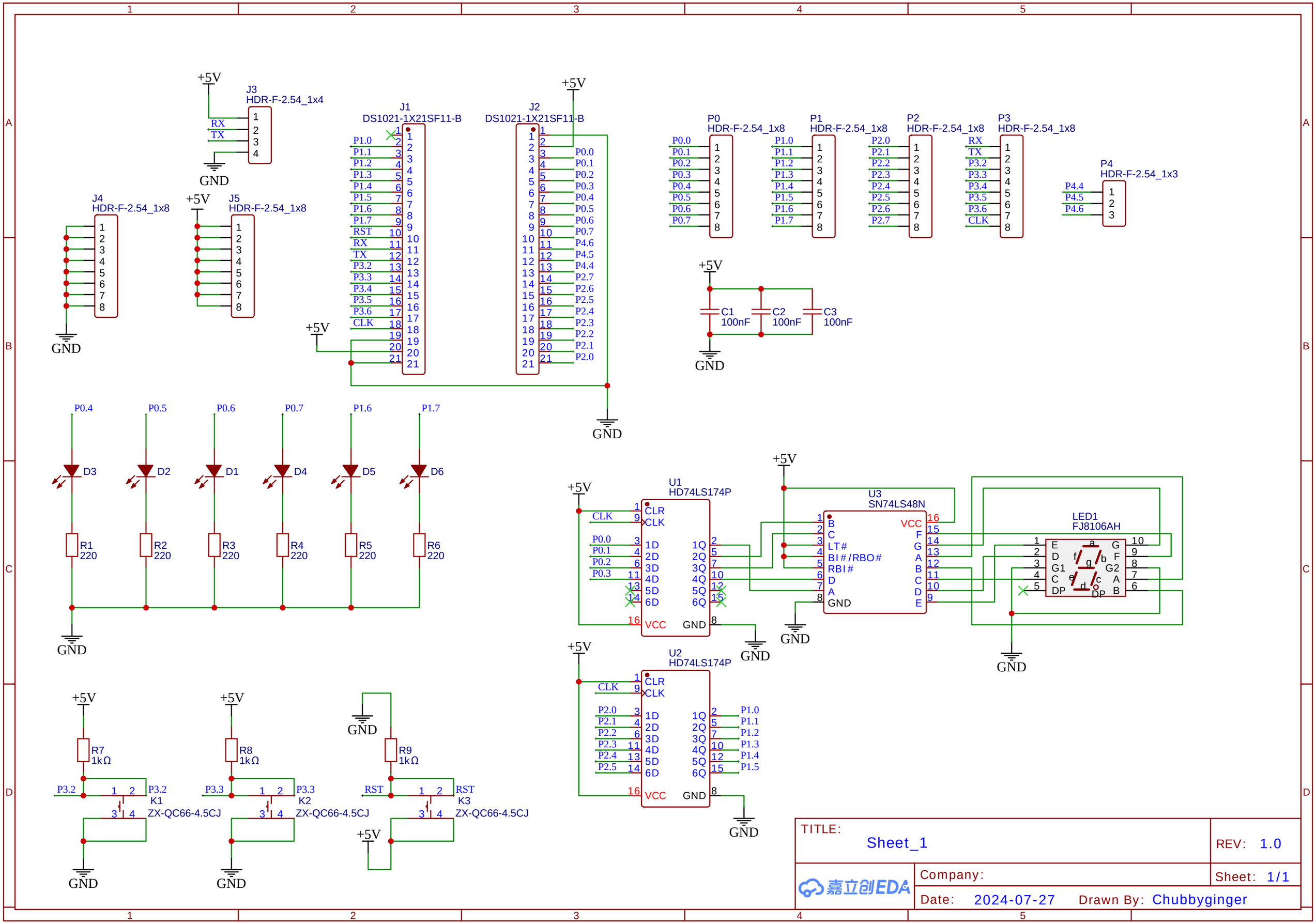
J3
HDR-F-2.54_1x4
RX
TX
+5V
GND
J4
HDR-F-2.54_1x8
J5
HDR-F-2.54_1x8
J1
DS1021-1X21SF11-B
J2
DS1021-1X21SF11-B
P0
HDR-F-2.54_1x8
P1
HDR-F-2.54_1x8
P2
HDR-F-2.54_1x8
P3
HDR-F-2.54_1x8
P4
HDR-F-2.54_1x3
C1
100nF
C2
100nF
C3
100nF
D1
D2
D3
D4
D5
D6
R1
220
R2
220
R3
220
R4
220
R5
220
R6
220
U1
HD74LS174P
U2
HD74LS174P
U3
SN74LS48N
LED1
FJ8106AH
R7
1kΩ
R8
1kΩ
R9
1kΩ
K1
ZX-QC66-4.5CJ
K2
ZX-QC66-4.5CJ
K3
ZX-QC66-4.5CJ
TITLE:
Sheet_1
REV: 1.0
Company:
Sheet: 1/1
Date: 2024-07-27
Drawn By: Chubbyginger