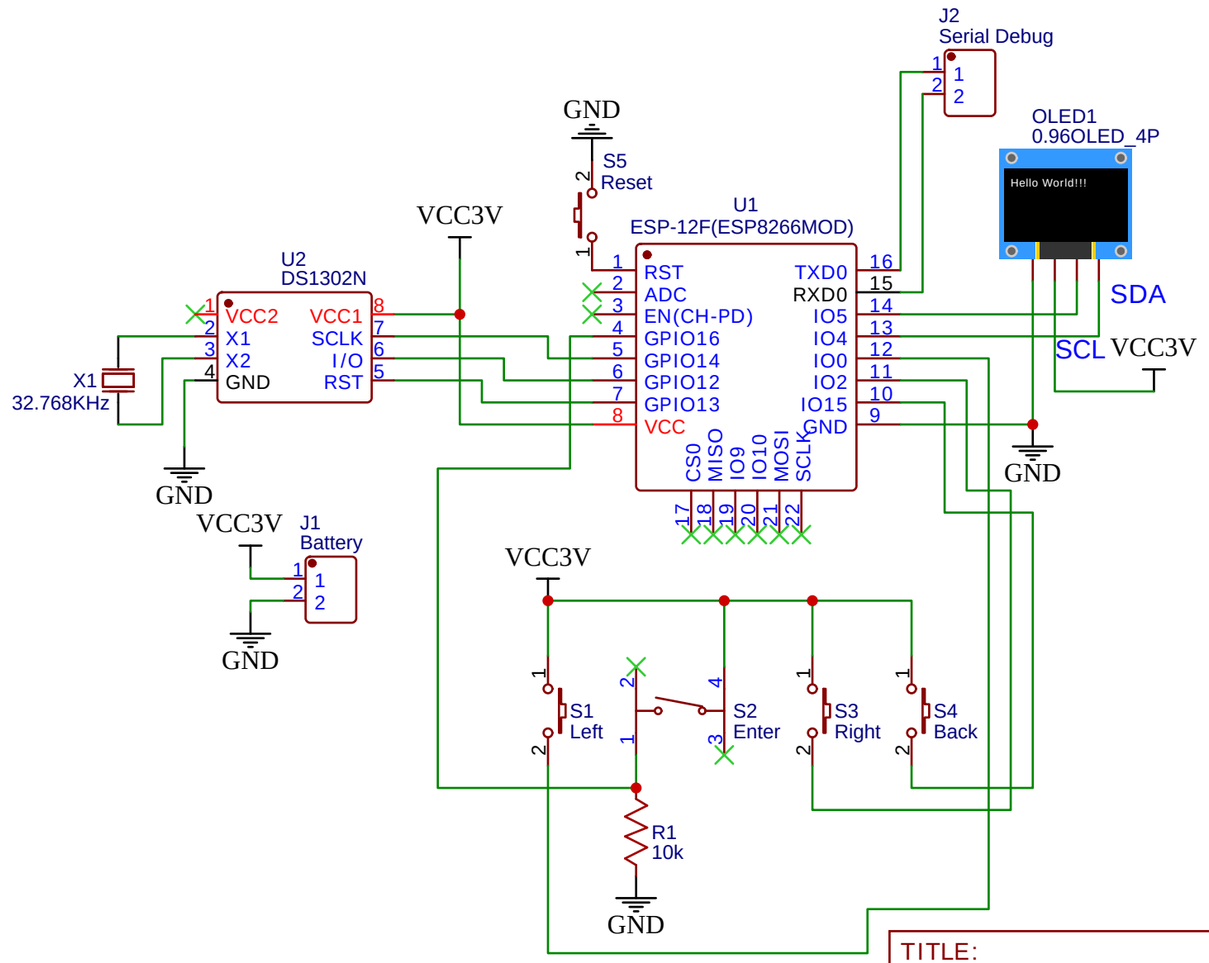

TITLE: ESP8266Watch		REV: v1
立创EDA	Company: yangshunhuai	Sheet: 1/1
	Date: 2021-08-17 Drawn By: yangshunhuai	