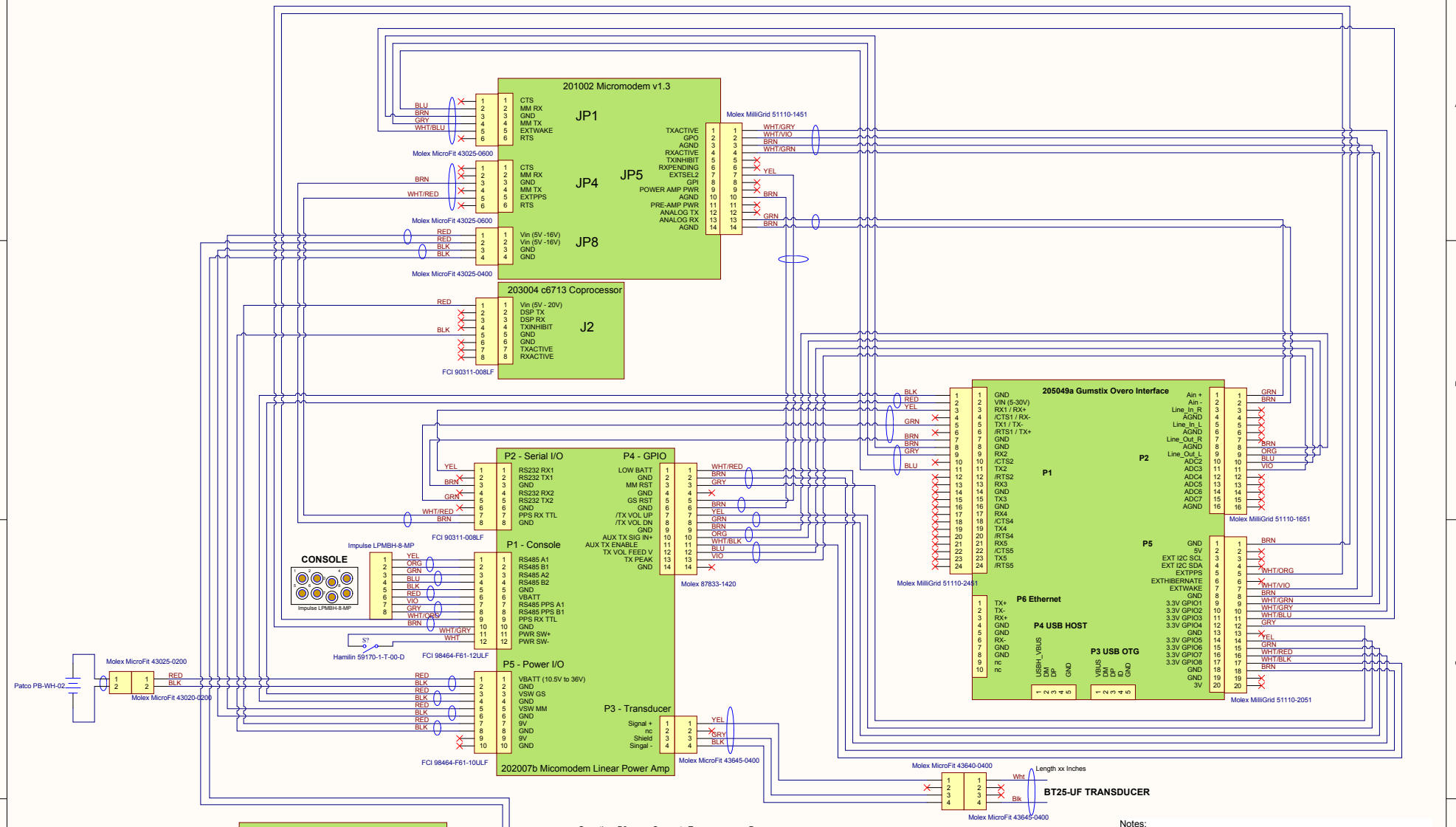

Gumstix -- P2	Connects To:	Purpose:
Ain +	MM Analog RX	Use to record RX signals.
Ain -	MM AGND	
Line Out L	LPL AUX TX Sig +	Use to transmit TX signals from GS through LPL
ADC2	TX VOL FEED V	PGA voltage feedback to verify volume changes.
ADC3	TX PEAK	Use to measure peak output voltage.
Gumstix -- P5		
EXTPPS	LPL PPS RX TTL	PPS that is received via RS485 from topside.
EXTWAKE	MM GPO	Use MM GPO to wake GS from hibernation.
3.3V GPIO 1	MM RXACTIVE	Use as a trigger for MM signal captures relative to RX signal.
3.3V GPIO 2	MM TXACTIVE	Use as a trigger for MM signal captures relative to TX signal.
3.3V GPIO 3	MM EXTWAKE	Use to wake MM from hibernation.
3.3V GPIO 4	LPL MM RST	Use to power cycle MM. Hold high for 6s-15s.
3.3V GPIO 5	LPL /TX VOL UP	Use to increase TX volume level.
3.3V GPIO 6	LPL /TX VOL DN	Use to decrease TX volume level.
3.3V GPIO 7	LPL LOW BATT	Use to monitor battery level. Line will go high when battery voltage is low.
3.3V GPIO 8	LPL AUX TX ENABLE	Must be used to provide gating signal for TX signal.
Micromodem -- JP5		
EXTSEL2	LPL GS RST	Use to power cycle GS. Hols high for 6s-15s.

Notes:

1. All Wires to be 24 AWG Teflon Insulated unless otherwise specified.
2. Wiring to be neatly routed and secured using chassis PEMS.
3. Group all wires as indicated on schematic and/or sample.

Woods Hole Oceanographic Institution
86 Water Street Dept 4 MS 18
Woods Hole, MA 02543

Cage Code: 88846
Drawn By: Keenan Ball
Date Drawn: 1/10/2012

Title: Small Shallow Water Node Multi-Channel Configuration RS485 to Power Amplifer

Drawing Number: **251005-SCH**
Rev: **A**

Sheet 1 of 1