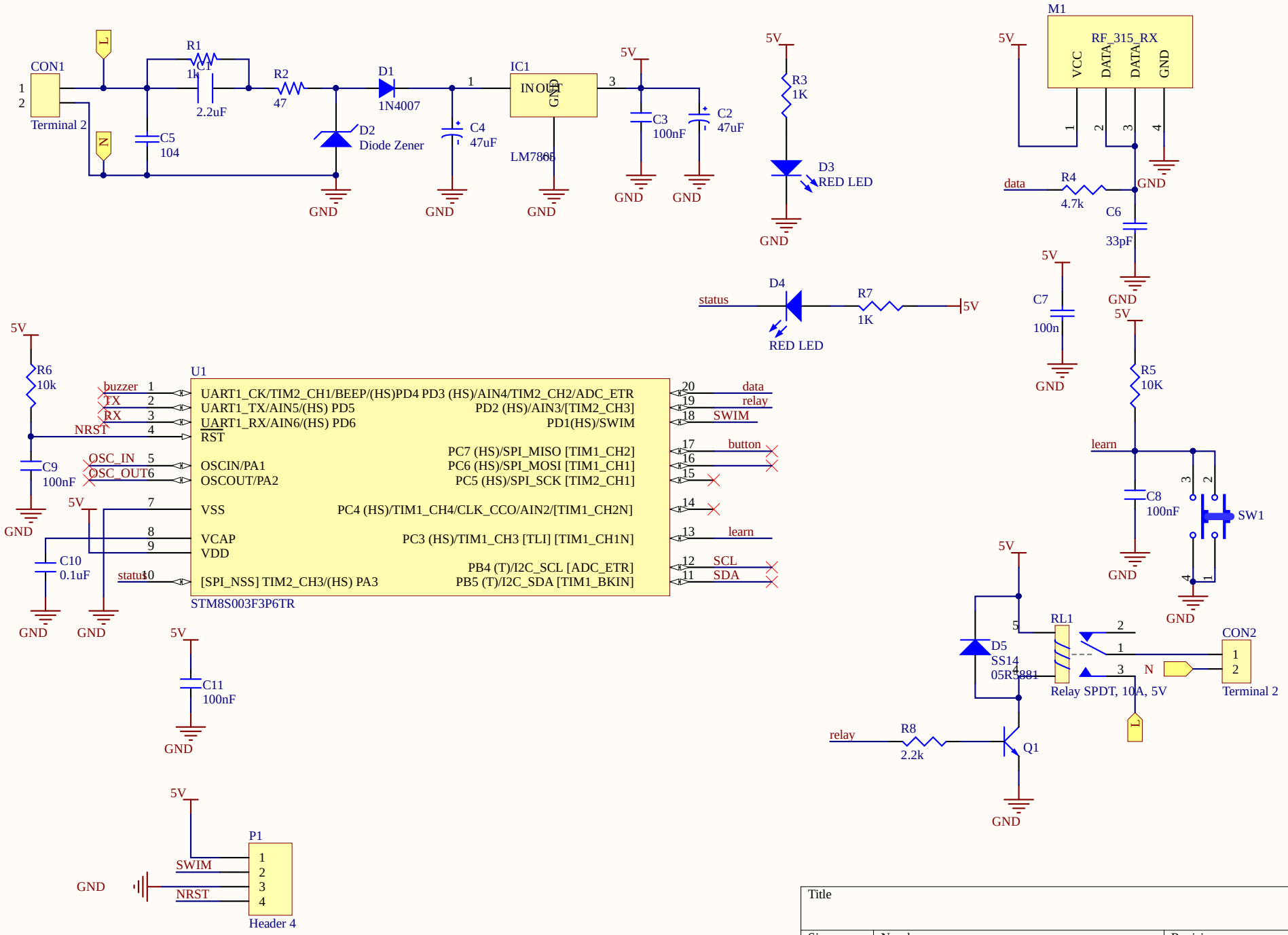
CON1
Terminal 2
L
N
R1
1k
C1
2.2uF
C5
104
R2
47
D1
1N4007
D2
Diode Zener
C4
47uF
IC1
IN OUT
GND
LM7805
C3
100nF
C2
47uF
5V
GND
R3
1K
D3
RED LED
M1
RF_315_RX
VCC
DATA
DATA
GND
data
R4
4.7k
C6
33pF
D4
status
R7
1K
RED LED
C7
100n
R5
10K
learn
C8
100nF
SW1
R6
10k
C9
100nF
C10
0.1uF
U1
buzzer
TX
RX
NRST
OSC_IN
OSC_OUT
status
UART1_CK/TIM2_CH1/BEEP/(HS)PD4
UART1_TX/AIN5/(HS) PD5
UART1_RX/AIN6/(HS) PD6
RST
OSCIN/PA1
OSCOUT/PA2
VSS
VCAP
VDD
[SPI_NSS] TIM2_CH3/(HS) PA3
PD3 (HS)/AIN4/TIM2_CH2/ADC_ETR
PD2 (HS)/AIN3/[TIM2_CH3]
PD1(HS)/SWIM
PC7 (HS)/SPI_MISO [TIM1_CH2]
PC6 (HS)/SPI_MOSI [TIM1_CH1]
PC5 (HS)/SPI_SCK [TIM2_CH1]
PC4 (HS)/TIM1_CH4/CLK_CCO/AIN2/[TIM1_CH2N]
PC3 (HS)/TIM1_CH3 [TLI] [TIM1_CH1N]
PB4 (T)/I2C_SCL [ADC_ETR]
PB5 (T)/I2C_SDA [TIM1_BKIN]
data
relay
SWIM
button
learn
SCL
SDA
STM8S003F3P6TR
C11
100nF
RL1
Relay SPDT, 10A, 5V
CON2
Terminal 2
D5
SS14
05R3881
R8
2.2k
Q1
P1
SWIM
NRST
Header 4
Title
Size
A
Number
Revision
Date: 11/8/2017
Sheet of
File: E:\Project\..\RF-learn-command-1relay-220V-expander.SchDoc
Drawn By:

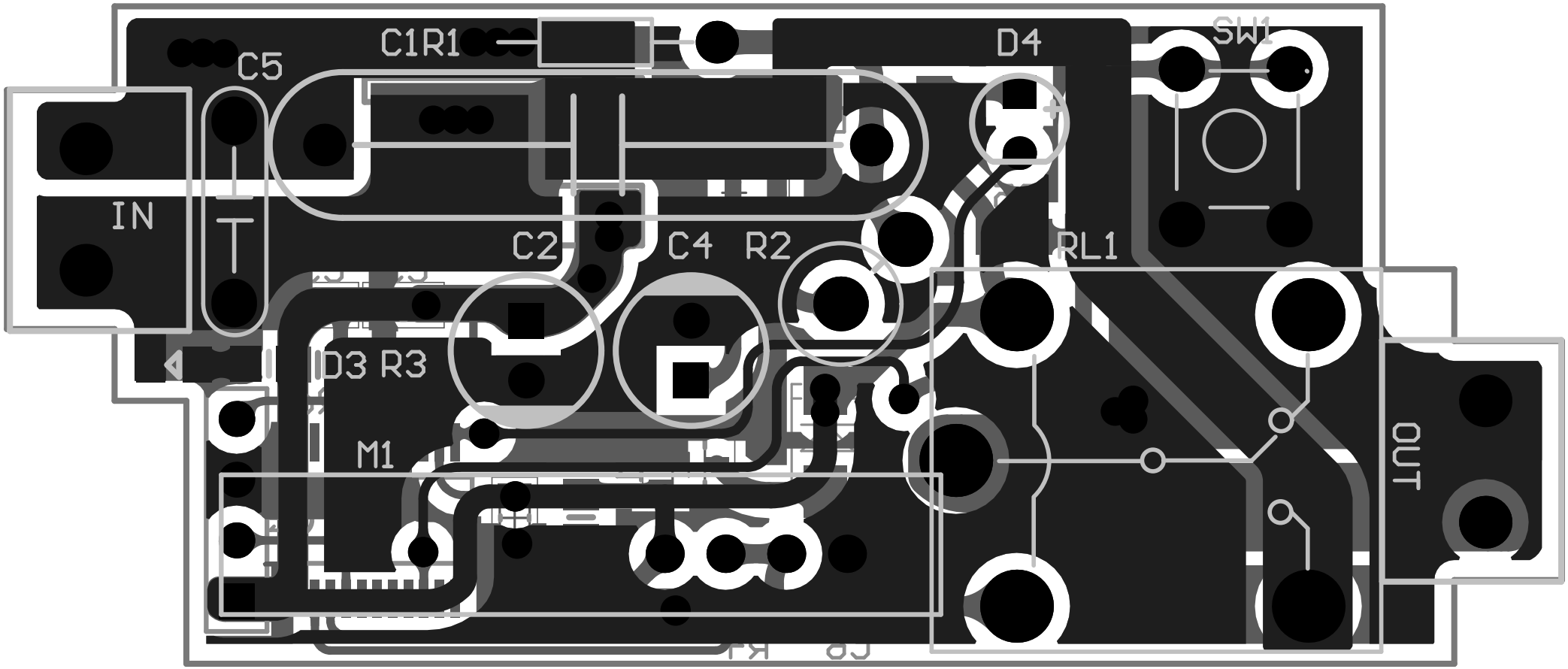
C1R1
C5
D4
SW1
IN
C2
C4
R2
RL1
D3 R3
M1
OUT

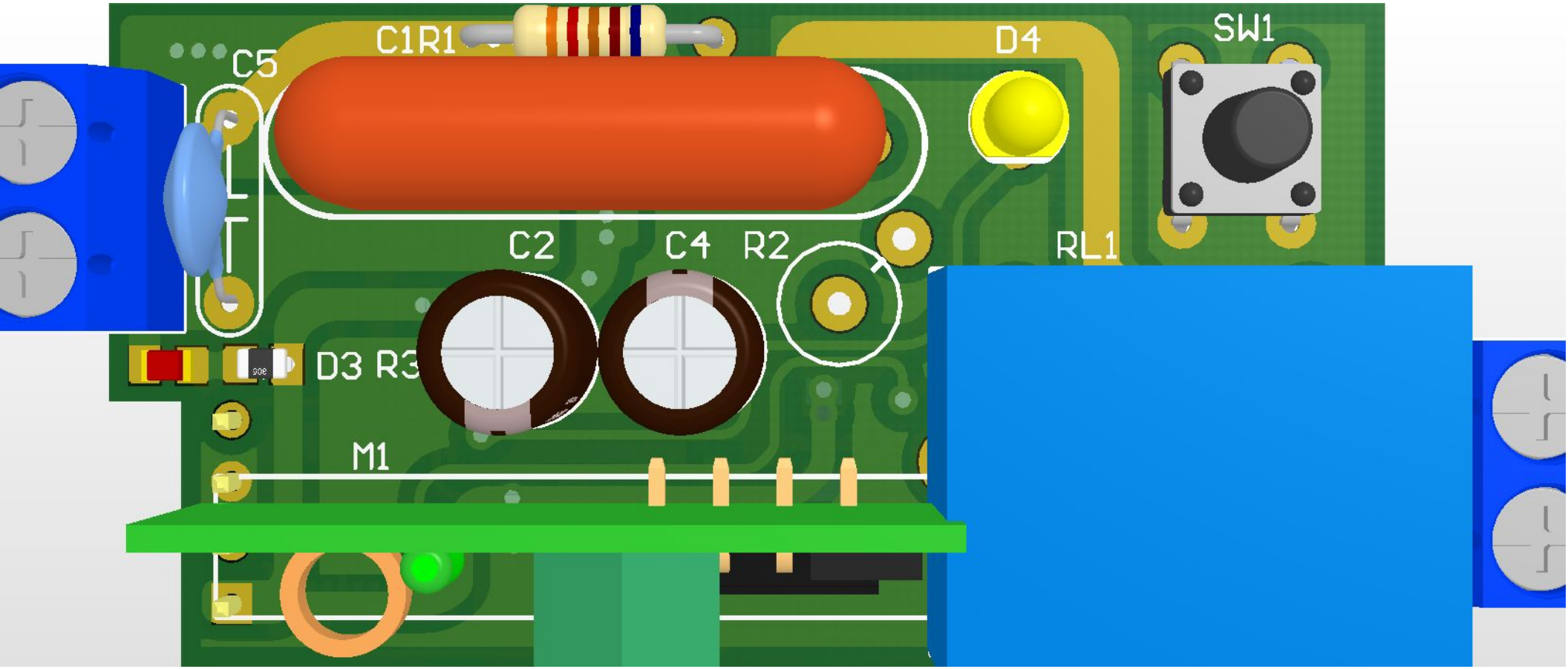
C5
C1R1
D4
SW1
C2
C4
R2
RL1
D3
R3
M1

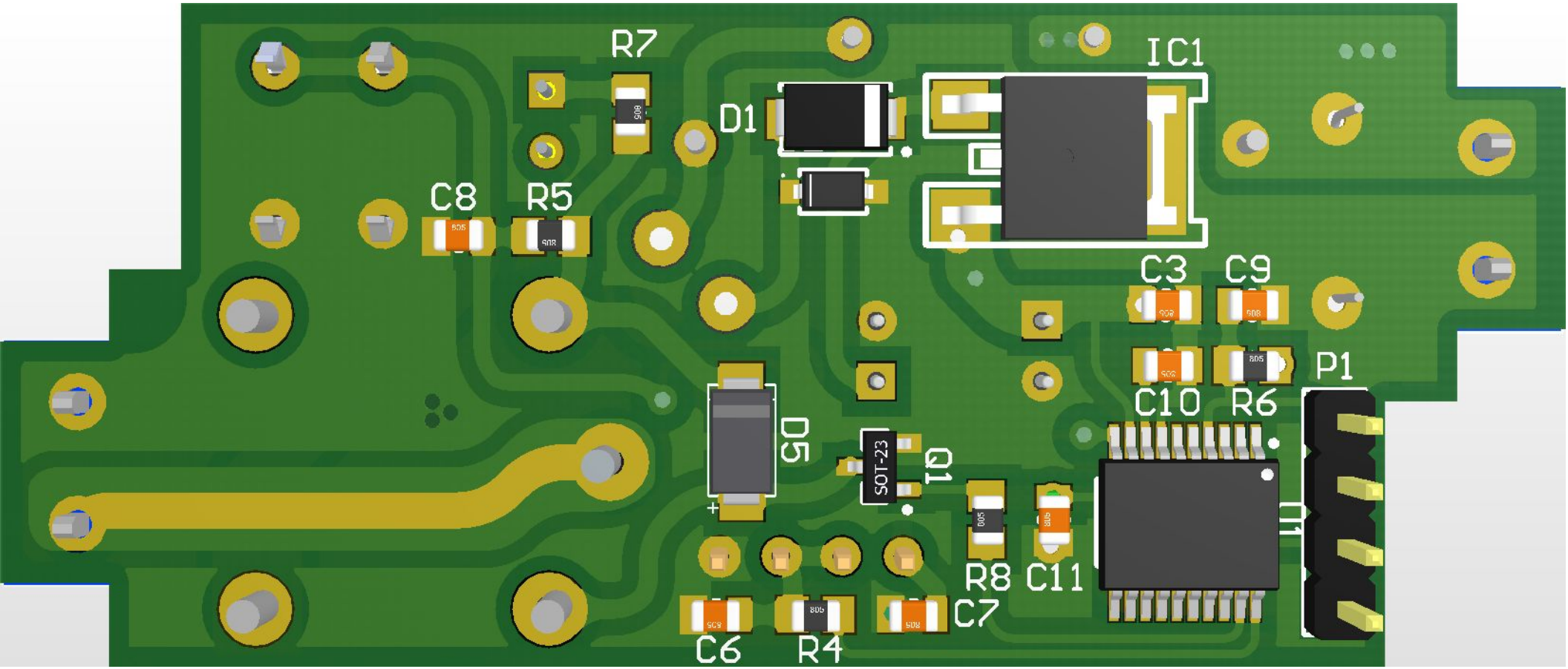
R7
D1
IC1
C8
R5
C3
C9
P1
C10
R6
D5
Q1
SOT-23
R8
C11
C7
C6
R4