Confidential
Security C

TSMC Confidential Information 556786 PGC PROGATE GROUP CORPORATION 07/15/2013

TSMC18 PDK usage guide:

An introduction on the usage of TSMC process design kits (PDK)

PDK Version: v1.0a Jan .07

Empowering Innovation SM

TSMC018 PDK Usage Guide

Confidential
Security C

Introduction:

- This document describes the TSMC process design kits (PDK) parameterized cell (Pcell) software, which provides a graphical user interface that lets user create parameterized cells for placement in design layout.
- It is assumed that the user is familiar with the development and design of integrated circuits and with the cadence Virtuoso Layout Editor.
- All the information and data contained hereunder constitute TSMC's proprietary and confidential information. Unless TSMC agrees otherwise in writing, you can only use the information contained herein for evaluation purpose. Further, you should treat the information as confidential information and exercise due care to prevent its disclosure to any persons, provided you may disclose it to your employees on a need to know basis in case they agree to similar duty of confidentiality to protect the information herein. You cannot disclose such information to any third party unless TSMC agrees in advance by writing. However, requirements hereunder shall not serve to supersede or change any existing contracts regulating similar issues between you and TSMC.

TSMC Confidential Information 556786 PGC PROGATE GROUP CORPORATION 07/15/2013

Empowering Innovation SM

TSMC018 PDK Usage Guide

Confidential
Security C

Overview:

- The Symbol Display Information.

  This section describes the symbol display information include four terminal NMOS symble, four terminal PMOS symbol, three terminal NMOS symbol, three terminal PMOS symbol, three terminal npn BJT symbol, three terminal pnp BJT symbol, two terminal diode symbol, two terminal resister symbol, three terminal resister symbol and two terminal varactor symbol.
- Device Table

  This section show the total device in this PDK. The user can check the page number in the device table to find out the CDF parameter and Pcell function.
- MOS Parameterized Cell Function Introduction
- BJT Parameterized Cell Function Introduction
- Diode Parameterized Cell Function Introduction
- Resistance Parameterized Cell Function Introduction
- Inductor Parameterized Cell Function Introduction
- Varactor Parameterized Cell Function Introduction
- Capacitor Parameterized Cell Function Introduction
- CDF Parameter Description
- Appendix

  Appendix A – Stretch Handles *Fast link*

  Appendix B – The three terminal MOS substrate pin *Fast link*

  Appendix C – AS AD PS PD NRS NRD methodology *Fast link*

  Appendix D – SA SB methodology *Fast link*

TSMC Confidential Information 556786 PGC PROGATE GROUP CORPORATION 07/15/2013

Empowering Innovation SM

TSMC018 PDK Usage Guide

Confidential
Security C

- **The Symbol Display Information:**
  - The following figure shows the symbol for a 3 terminal NMOS :

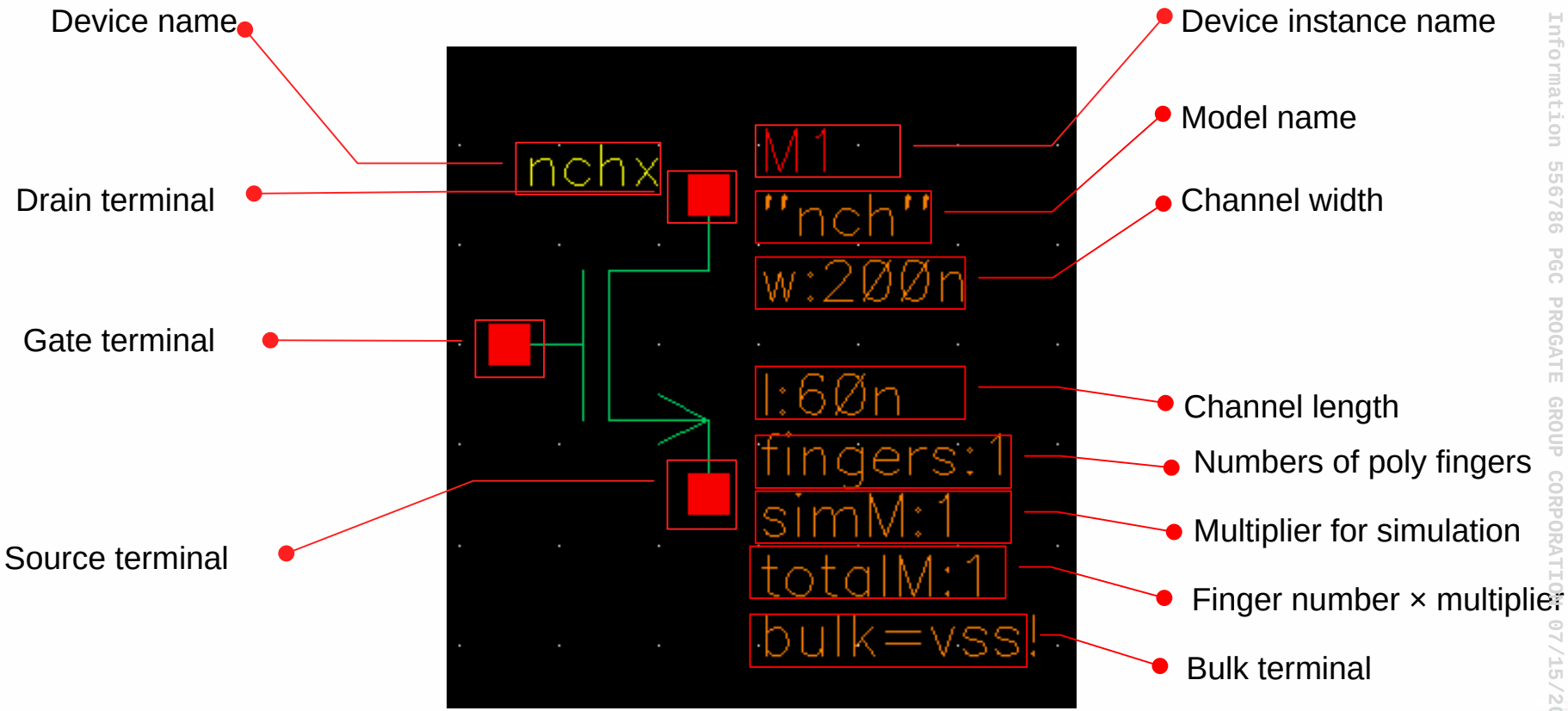

TSMC Confidential Information 556786 PGC PROGATE GROUP CORPORATION 07/15/2013

Empowering Innovation SM

TSMC018 PDK Usage Guide

Confidential
Security C

- **The Symbol Display Information:**
  - The following figure shows the symbol for a 3 terminal PMOS :

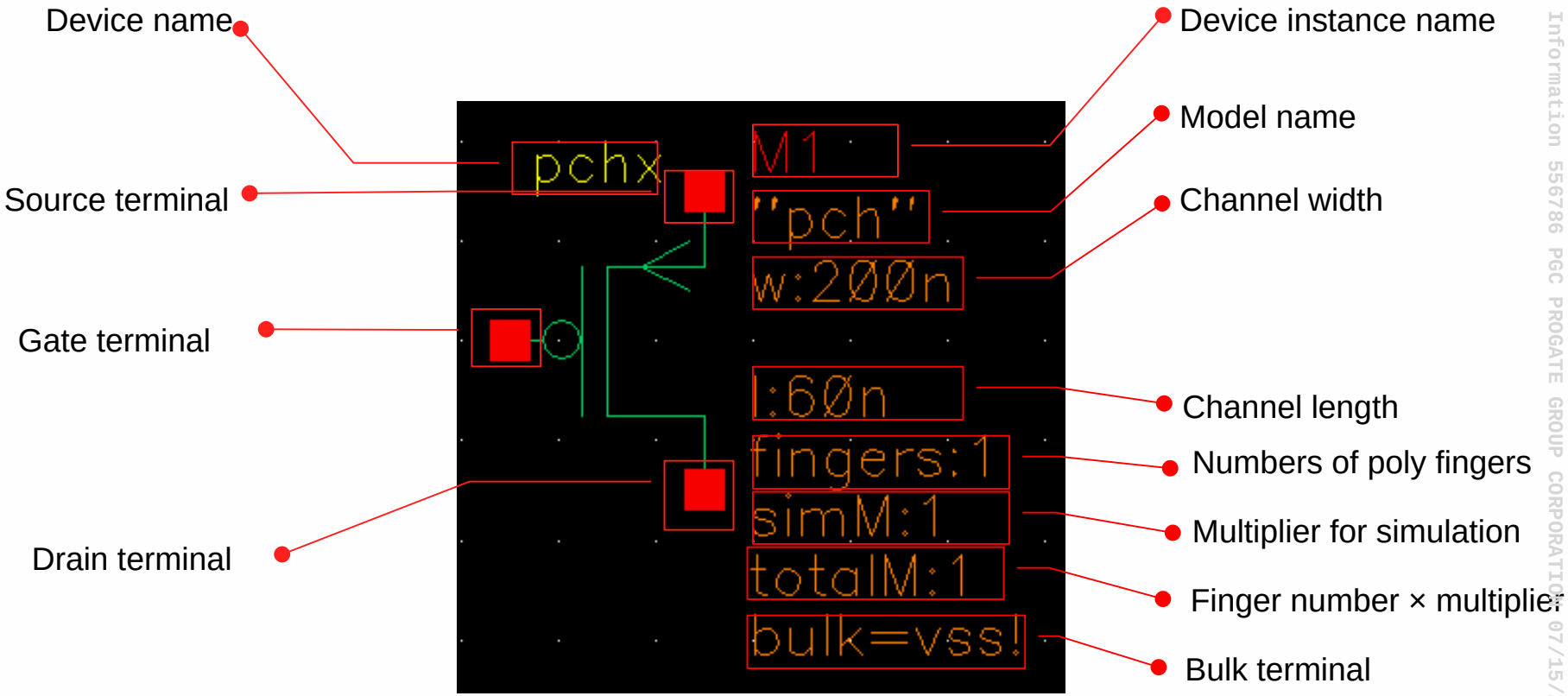

TSMC Confidential Information 556786 PGC PROGATE GROUP CORPORATION 07/15/2013

Empowering Innovation SM

TSMC018 PDK Usage Guide

Confidential
Security C

- **The Symbol Display Information:**
  - The following figure shows the symbol for a 4 terminal NMOS:

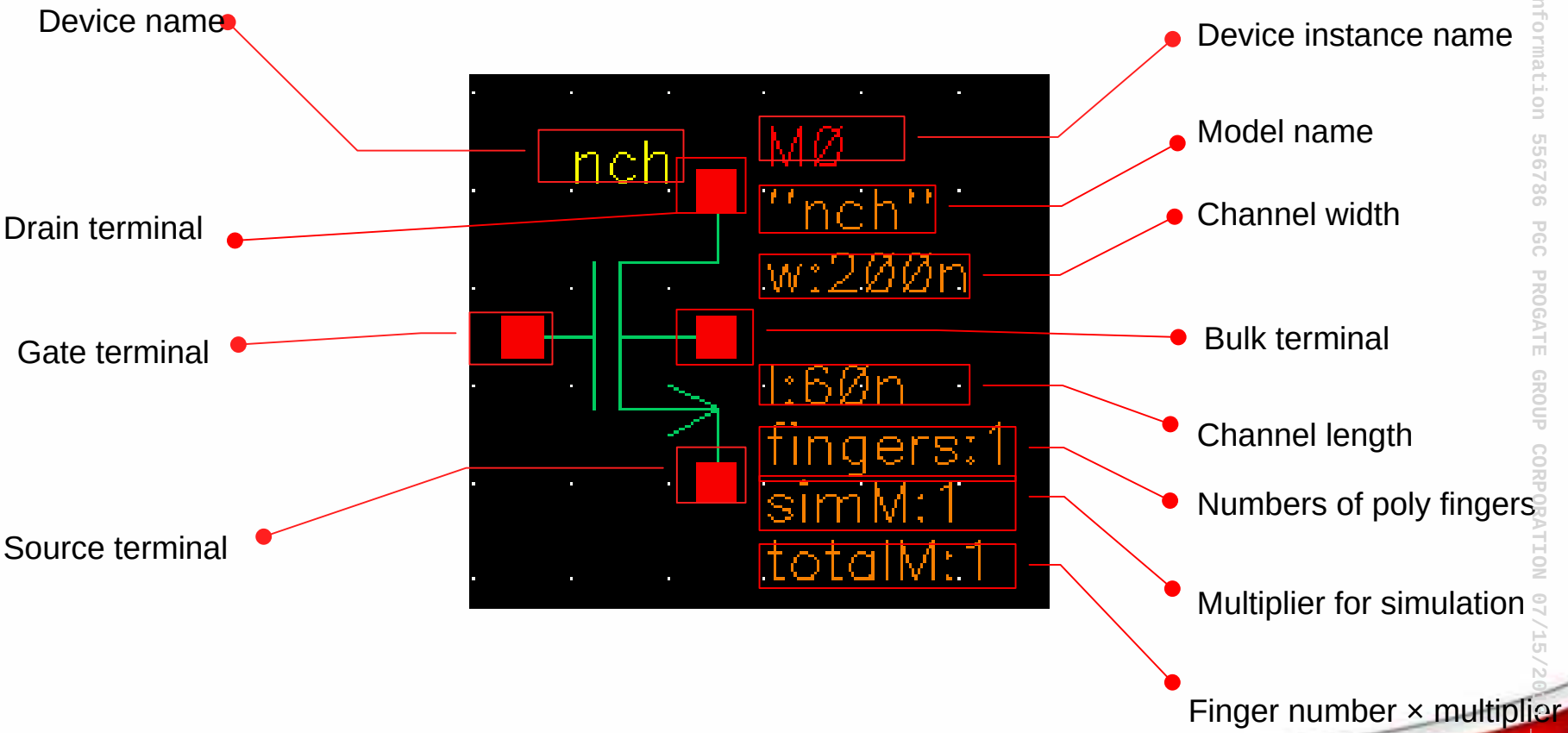

TSMC Confidential Information 556786 PGC PROGATE GROUP CORPORATION 07/15/20

Empowering Innovation SM

TSMC018 PDK Usage Guide

- **The Symbol Display Information:**
  - The following figure shows the symbol for a 4 terminal PMOS:

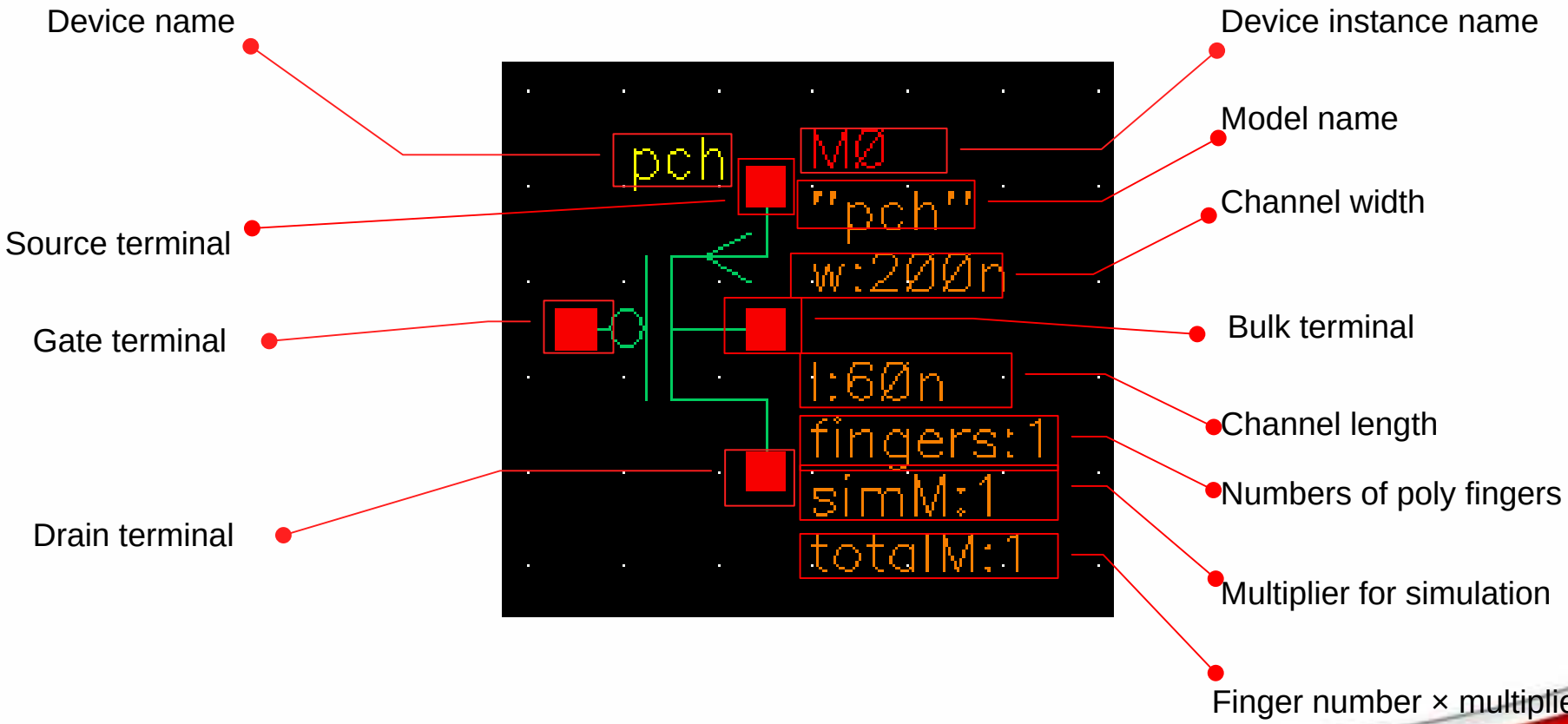

TSMC Confidential Information 556786 PGC PROGATE GROUP CORPORATION 07/15/20

Empowering Innovation SM

TSMC018 PDK Usage Guide

Confidential
Security C

- **The Symbol Display Information:**
  - The following figure shows the symbol for a 5 terminal RF_PMOS:

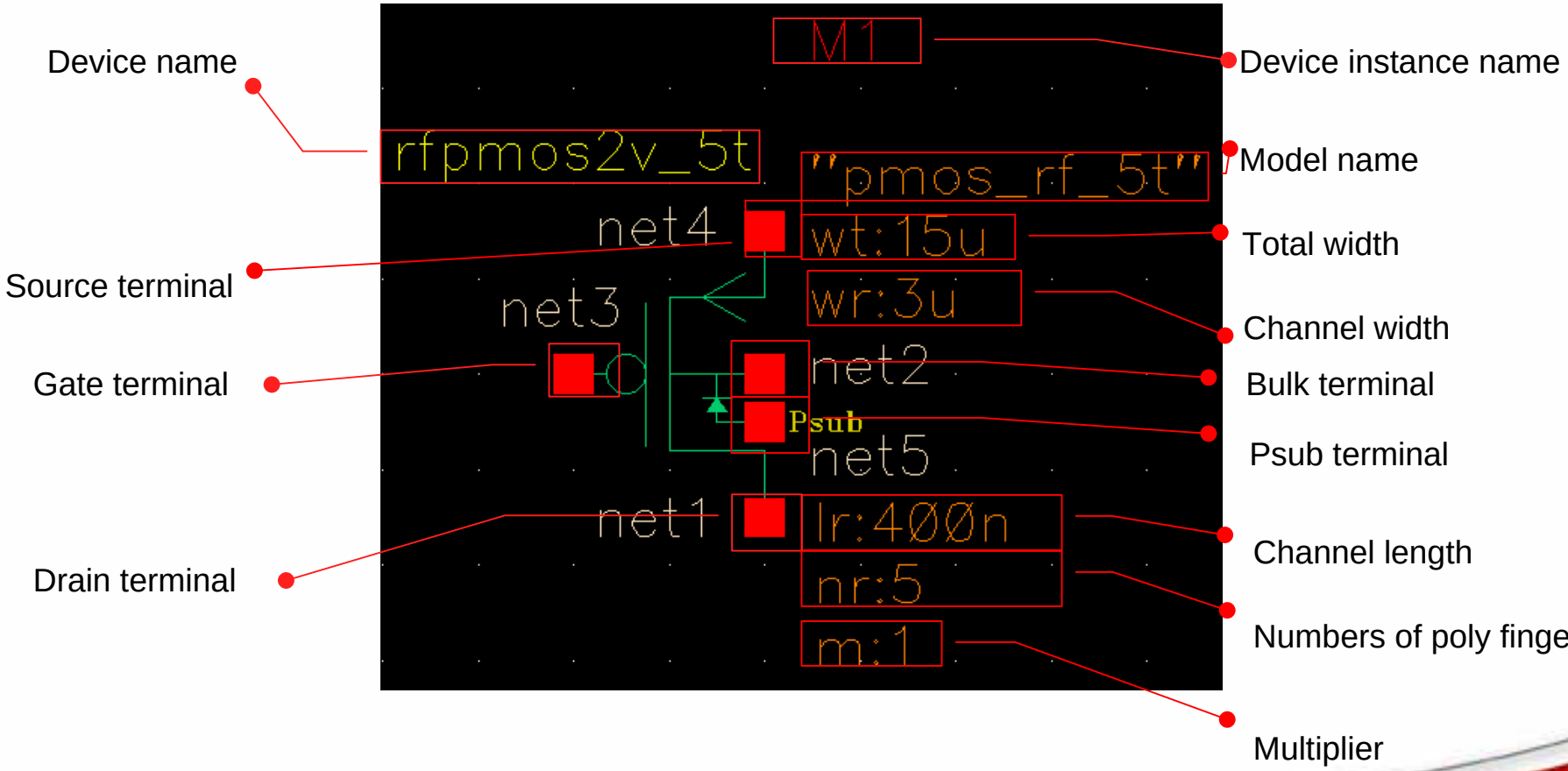

TSMC Confidential Information 556786 PGC PROGATE GROUP CORPORATION 07/15/2013

Empowering Innovation SM

TSMC018 PDK Usage Guide

Confidential
Security C

- **The Symbol Display Information:**
  - The following figure shows the symbol for a 6 terminal RF_PMOS:

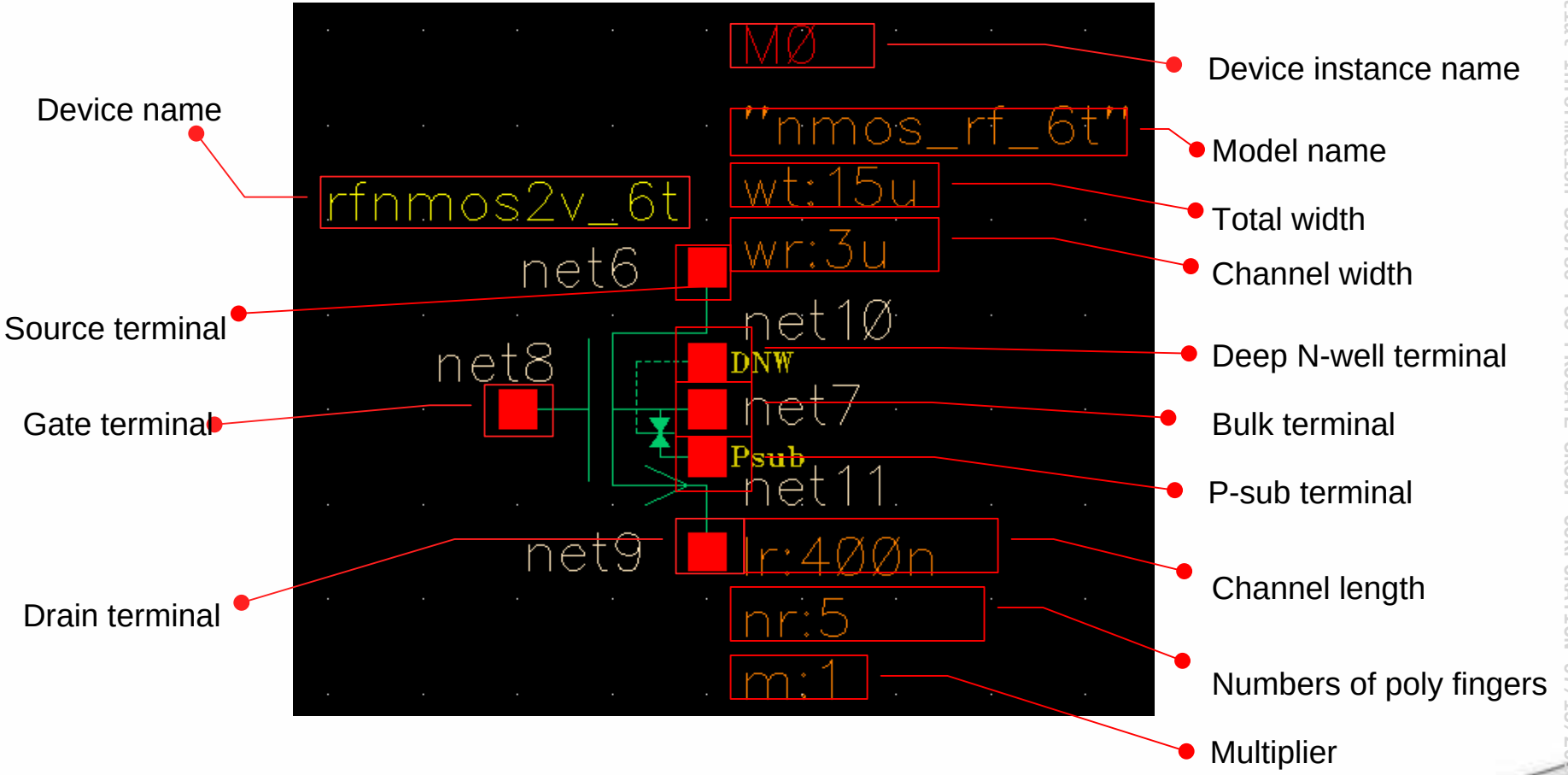

TSMC Confidential Information 556786 PGC PROGATE GROUP CORPORATION 07/15/2013

Empowering Innovation SM

Confidential
Security C

- **The Symbol Display Information:**
  - The following figure shows the symbol for a 6 terminal RF_PMOS:

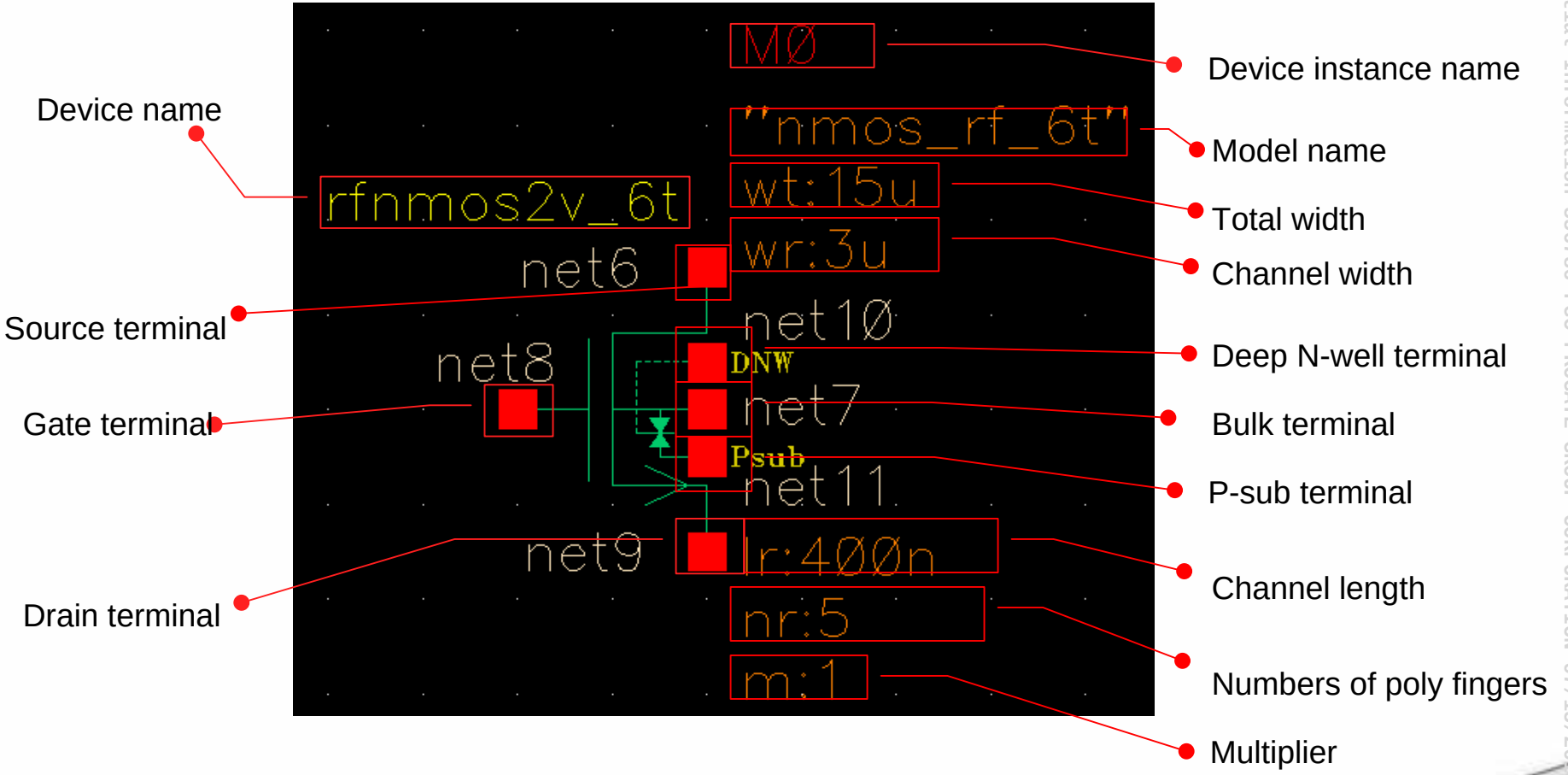

TSMC Confidential Information 556786 PGC PROGATE GROUP CORPORATION 07/15/2013

Empowering Innovation SM

Confidential
Security C

- **The Symbol Display Information:**
  - The following figure shows the symbol for a 2 terminal resister

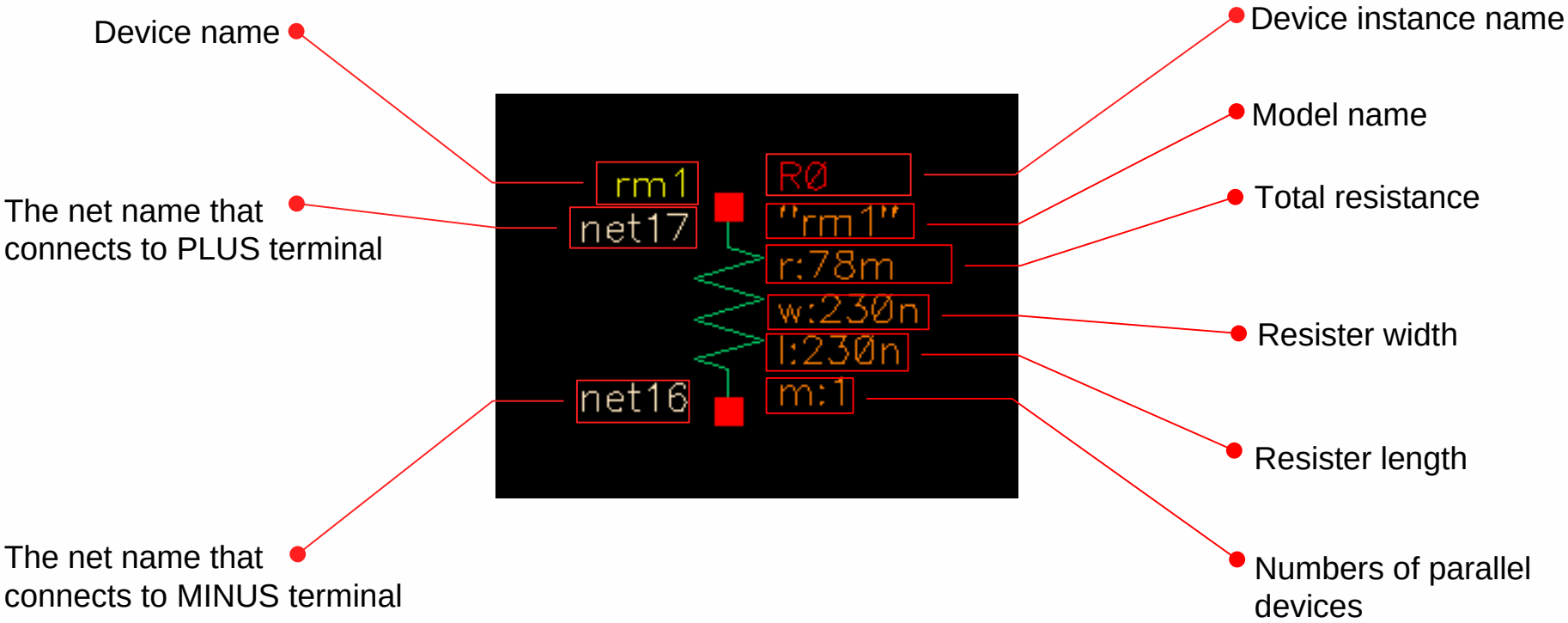

TSMC Confidential Information 556786 PGC PROGATE GROUP CORPORATION 07/15/2013

Empowering Innovation SM

TSMC018 PDK Usage Guide

Confidential
Security C

- **The Symbol Display Information:**
  - The following figure shows the symbol for a 3 terminal resister

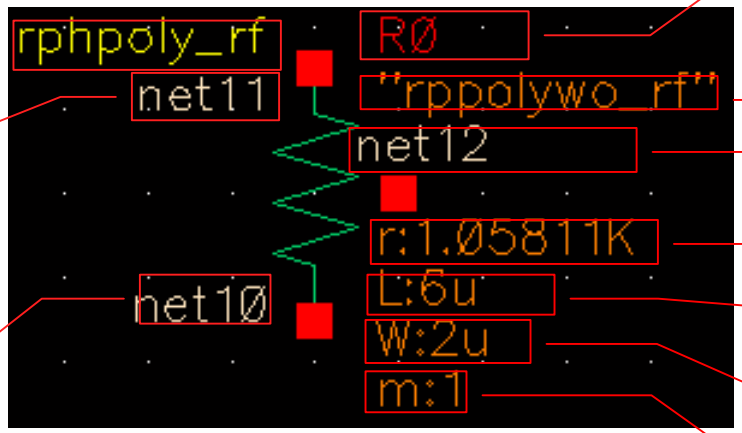

Device name

Device instance name

Model name

The net name that connect to BULK terminal

The net name that connects to PLUS terminal

Total resistance

Resister length

Resister width

The net name that connects to MINUS terminal

Numbers of parallel devices

TSMC Confidential Information 556786 PROGATE GROUP CORPORATION 07/15/2003

Empowering Innovation SM

Confidential
Security C

- **The Symbol Display Information:**
  - The following figure shows the symbol for a 3 terminal npn BJT:

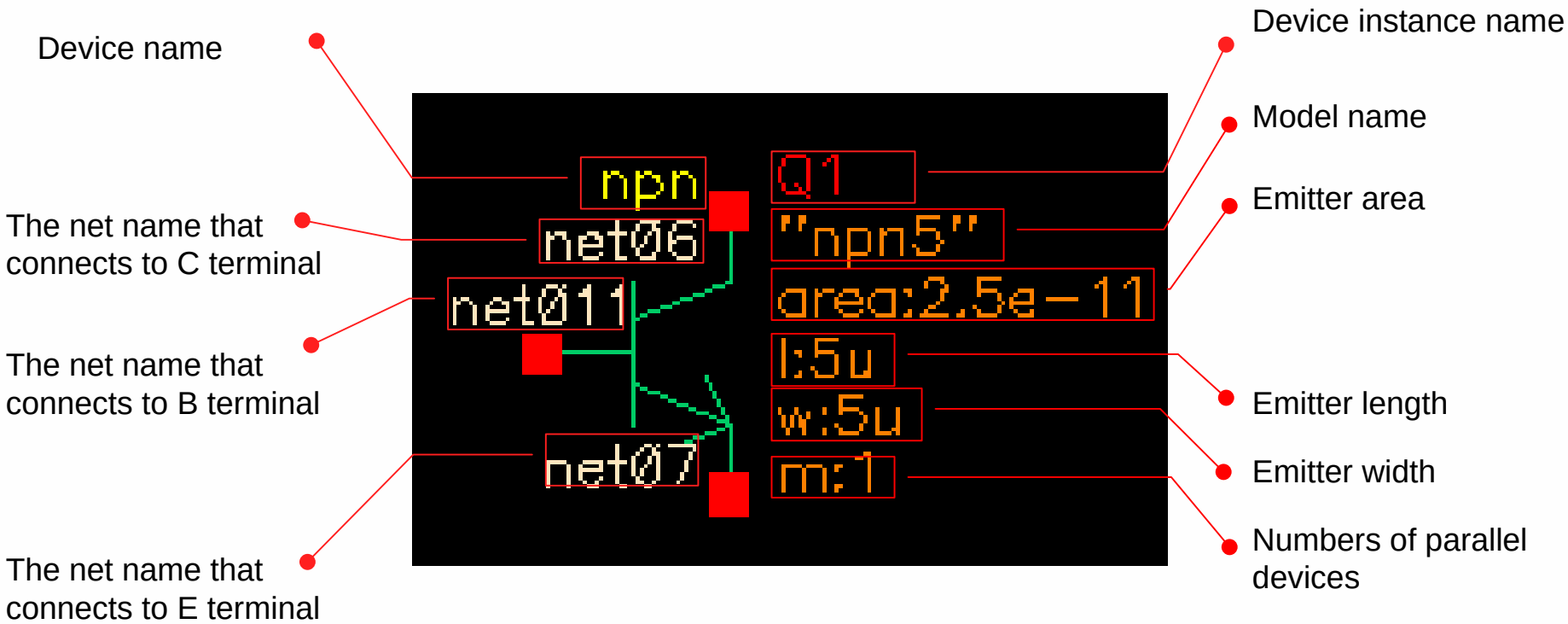

TSMC Confidential Information 556786 PGC PROGATE GROUP CORPORATION 07/15/2013

Empowering Innovation SM

Confidential
Security C

- **The Symbol Display Information:**
  - The following figure shows the symbol for a 3 terminal pnp BJT:

Device name

The net name that connects to E terminal

The net name that connects to B terminal

The net name that connects to C terminal

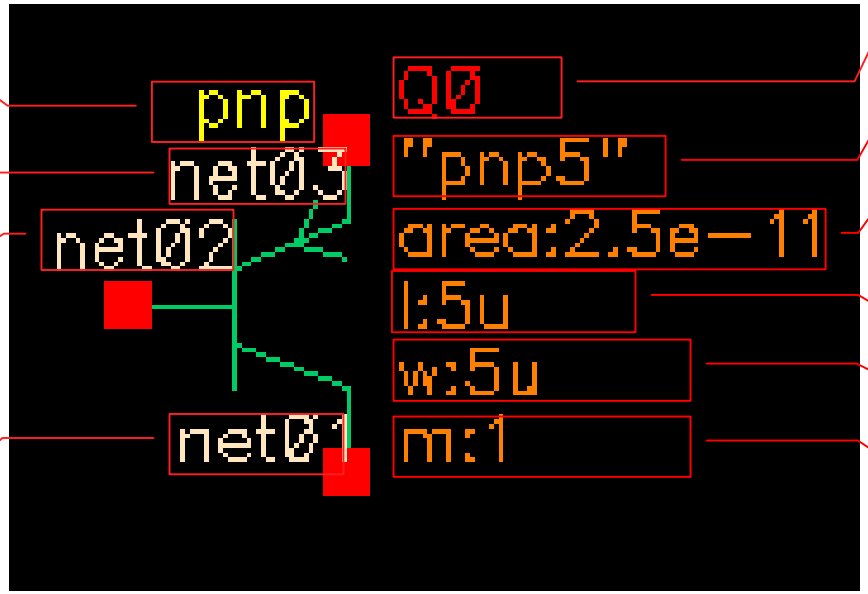

Device instance name

Model name

Emitter area

Emitter length

Emitter width

Numbers of parallel devices

TSMC Confidential Information 556786 PGC PROGATE GROUP CORPORATION 07/15/2013

Empowering Innovation SM

Confidential
Security C

- **The Symbol Display Information:**
  - The following figure shows the symbol for a 2 terminal diode:

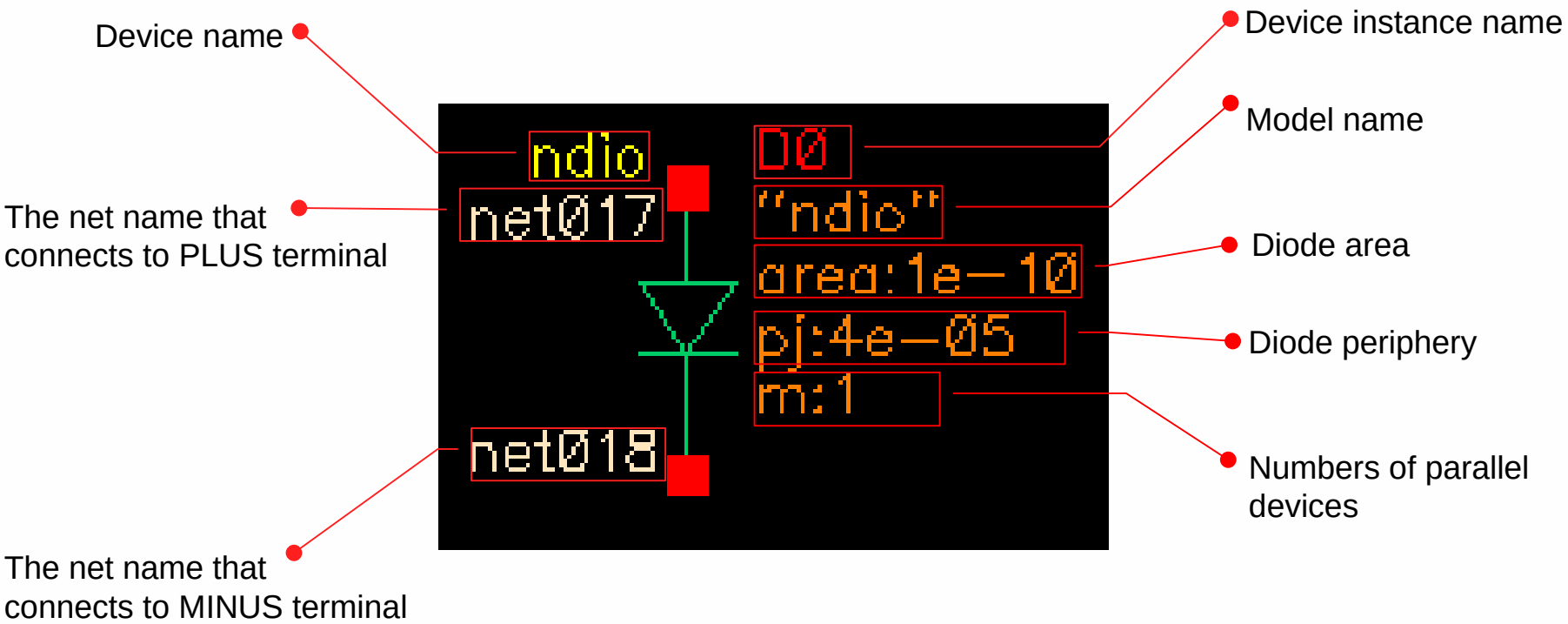

TSMC Confidential Information 556786 PGC PROGATE GROUP CORPORATION 07/15/2013

Empowering Innovation SM

Confidential
Security C

- **The Symbol Display Information:**
  - The following figure shows the symbol for a 3 terminal diode:

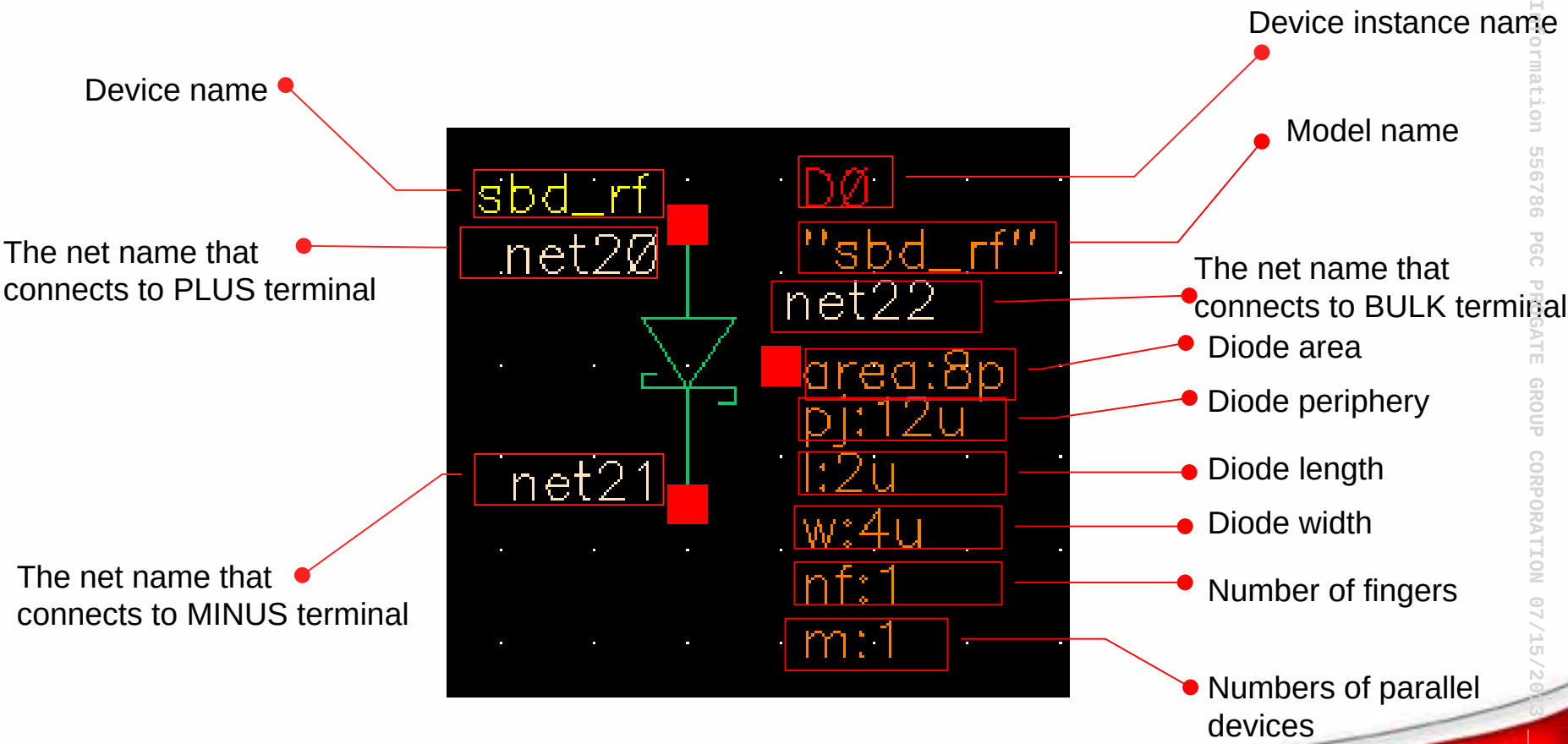

TSMC Confidential Information 556786 PGC PROGATE GROUP CORPORATION 07/15/2003

Empowering Innovation SM

TSMC018 PDK Usage Guide

- **The Symbol Display Information:**
  - The following figure shows the symbol for a 2 terminal capacitor:

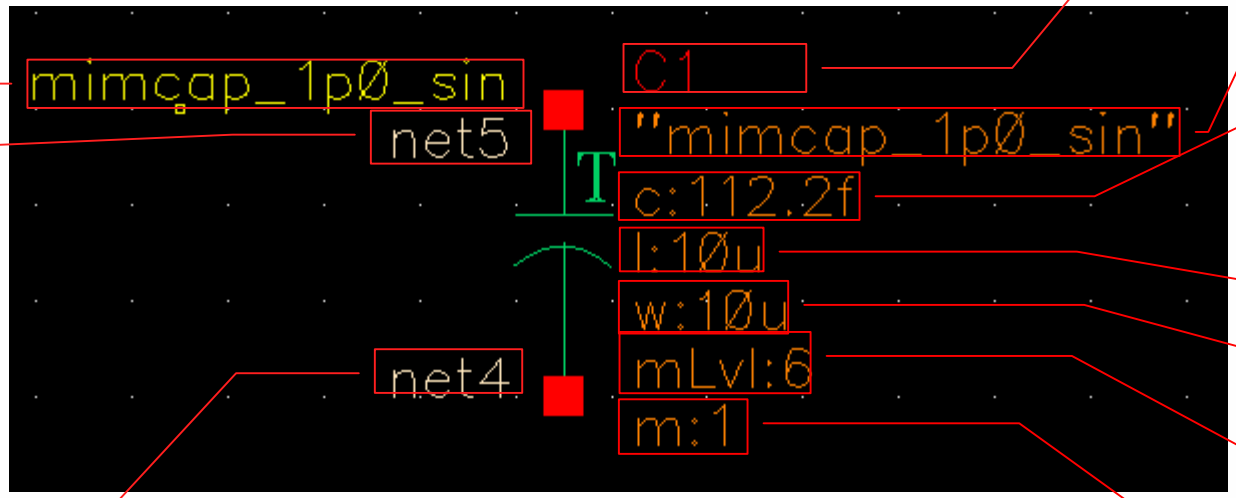

Device name

The net name that connects to PLUS terminal

The net name that connects to MINUS terminal

Device instance name

Model name

Total capacitance

Capacitor length

Capacitor width

Contact Metal layer

Numbers of parallel devices

TSMC Confidential Information 556786 PGC PROGATE GROUP CORPORATION 07/15/2013

Confidential
Security C

- **The Symbol Display Information:**
  - The following figure shows the symbol for a 3 terminal capacitor:

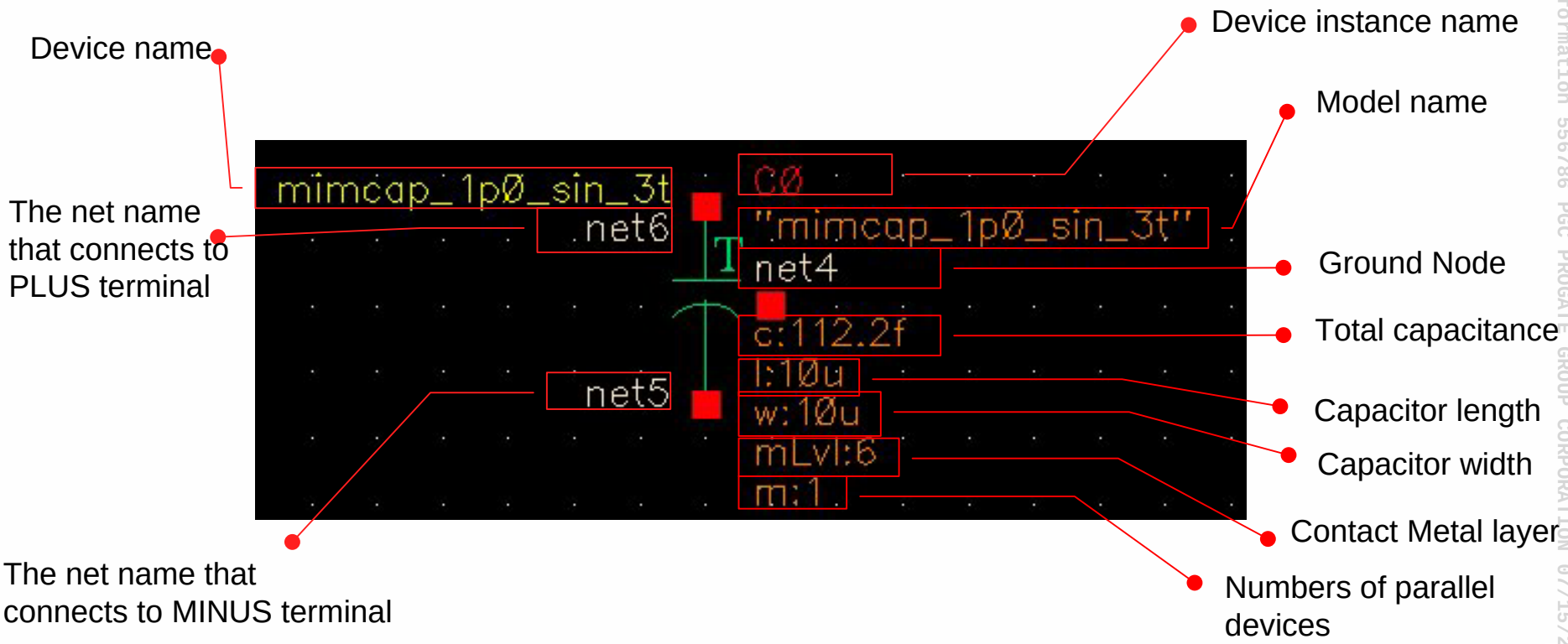

TSMC Confidential Information 556786 PGC PROGATE GROUP CORPORATION 07/15/2013

Empowering Innovation SM

TSMC018 PDK Usage Guide

- **The Symbol Display Information:**
  - The following figure shows the symbol for a 5 terminal capacitor:

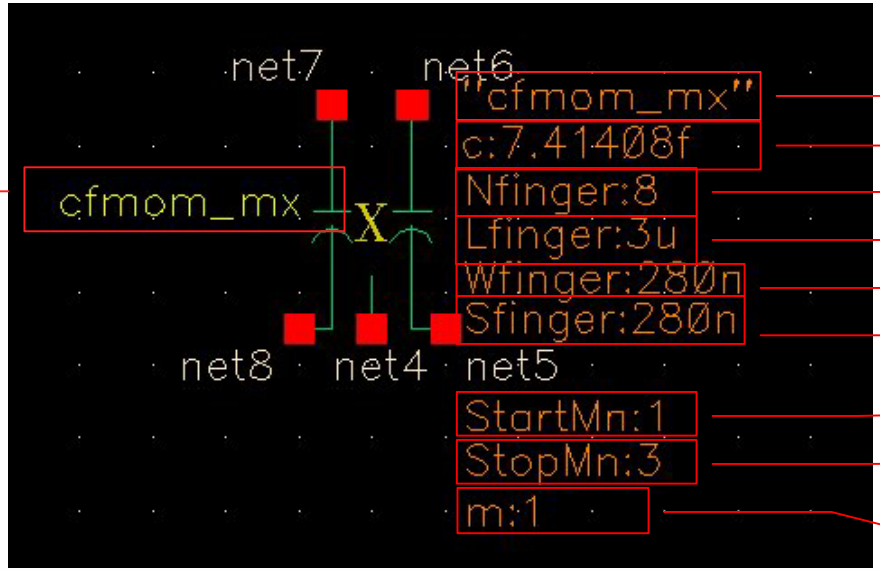

Model name

Single capacitance

Device name

Number of fingers

Fingers length

Fingers width

Fingers space

rtmom bottom metal layer

rtmom top metal layer

multiplier

TSMC Confidential Information 556786 PGC PROGATE GROUP CORPORATION 07/15/2003

TSMC018 PDK Usage Guide

Confidential
Security C

- **The Symbol Display Information:**
  - The following figure shows the symbol for a 3 terminal capacitor:

Device name

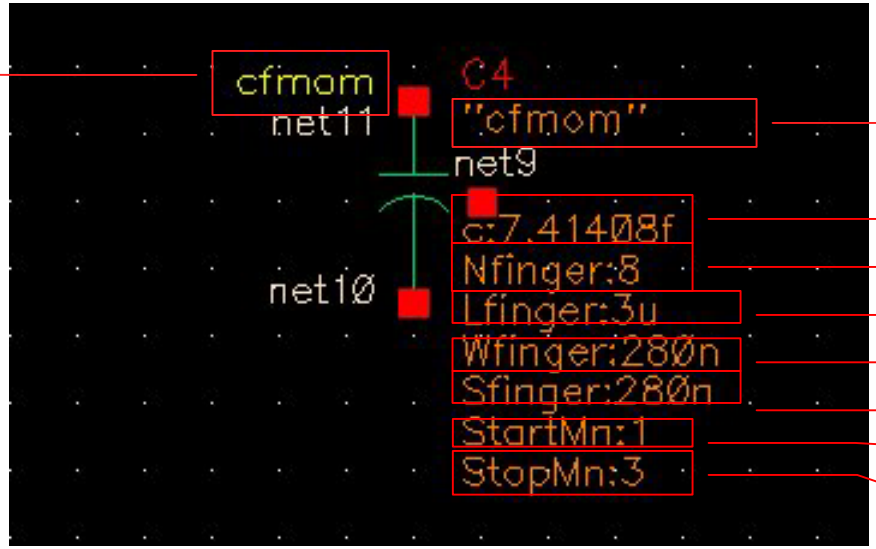

Model name

capacitance

Number of fingers

Fingers length

Fingers width

Fingers space

rtmom bottom metal layer

rtmom top metal layer

TSMC Confidential Information 556786 PGC PROGATE GROUP CORPORATION 07/15/2003

Empowering Innovation SM

TSMC018 PDK Usage Guide

- **The Symbol Display Information:**
  - The following figure shows the symbol for a 3 terminal capacitor:

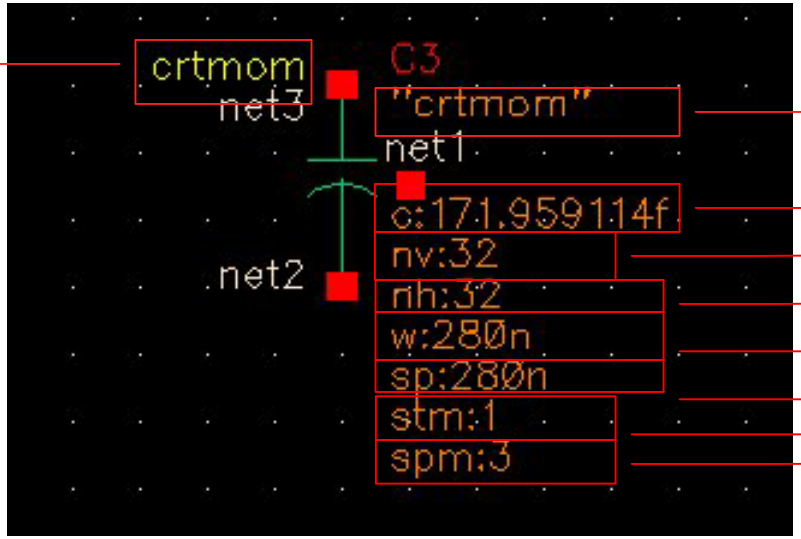

Device name

Model name

capacitance

Number of vertical fingers

Number of horizontal fingers

Fingers width

Fingers space

rtmom bottom metal layer

rtmom top metal layer

TSMC Confidential Information 556786 PROGATE GROUP CORPORATION 07/15/2013

Confidential
Security C

- **The Symbol Display Information:**
  - The following figure shows the symbol for a 2 terminal varactor:

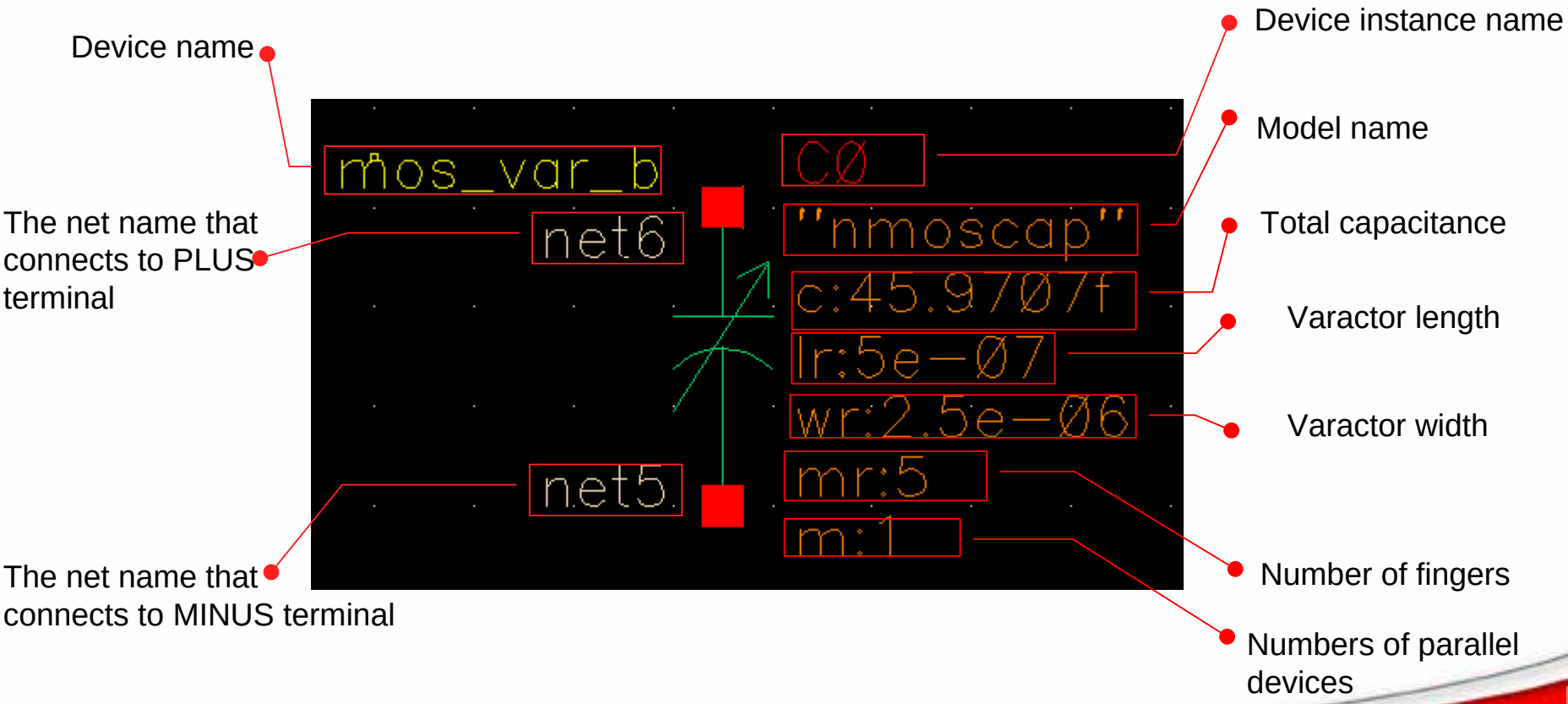

TSMC Confidential Information 556786 PGC PROGATE GROUP CORPORATION 07/15/2003

Empowering Innovation SM

Confidential
Security C

- **The Symbol Display Information:**
  - The following figure shows the symbol for a 3 terminal varactor:

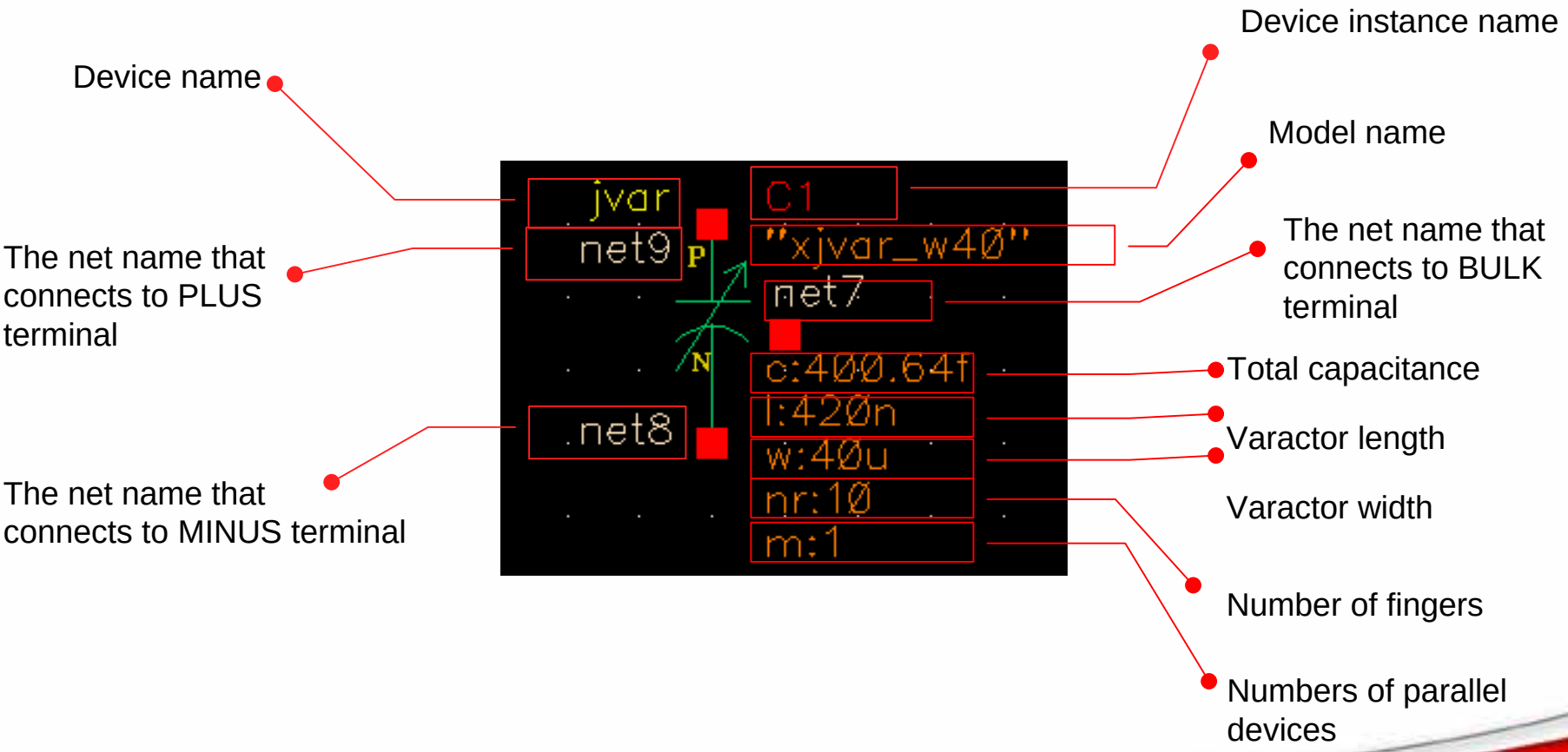

TSMC Confidential Information 556786 PGC PROGATE GROUP CORPORATION 07/15/2003

Empowering Innovation SM

TSMC018 PDK Usage Guide

Confidential
Security C

- **The Symbol Display Information:**
  - The following figure shows the symbol for a 3 terminal inductor:

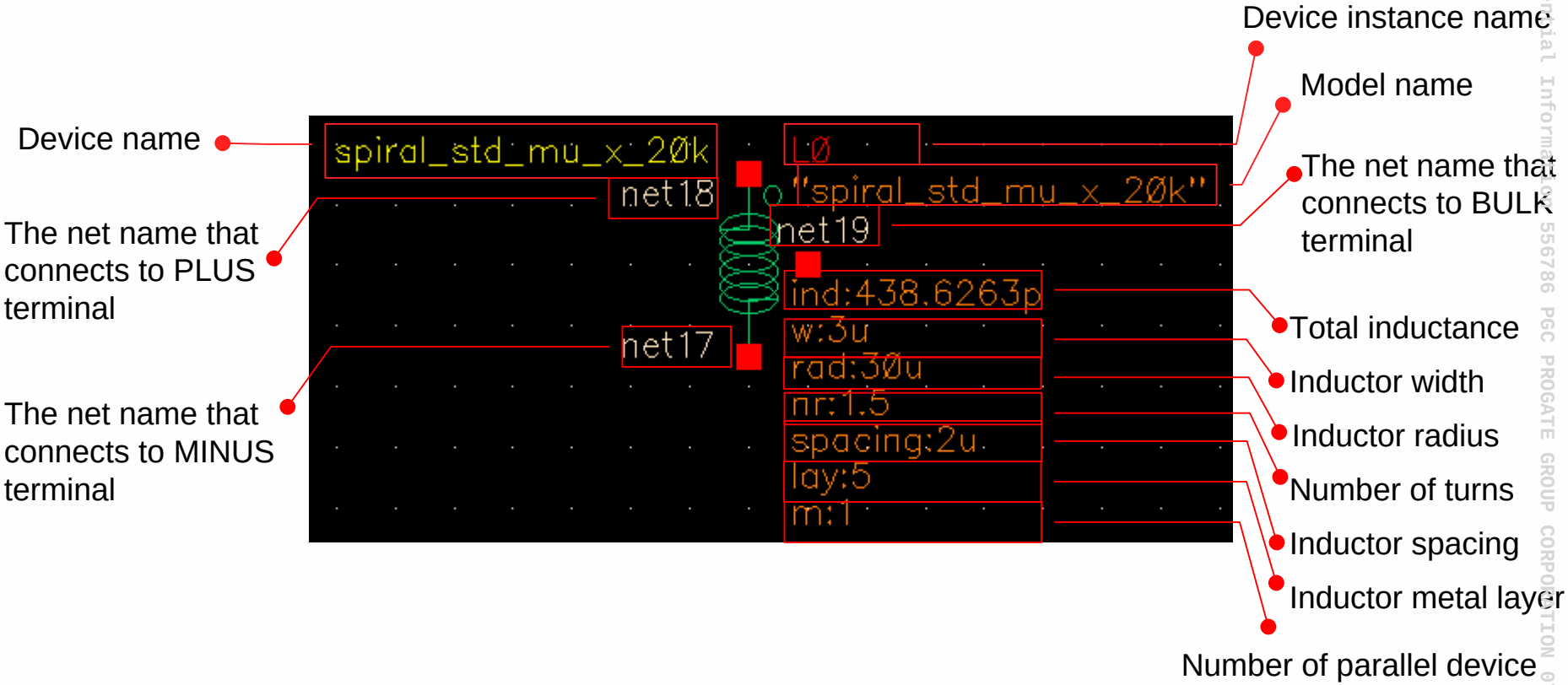

TSMC Confidential Information 556786 PGC PROGATE GROUP CORPORATION 07/15/2003

Empowering Innovation SM

Confidential
Security C

- **The Symbol Display Information:**
  - The following figure shows the symbol for a 4 terminal inductor:

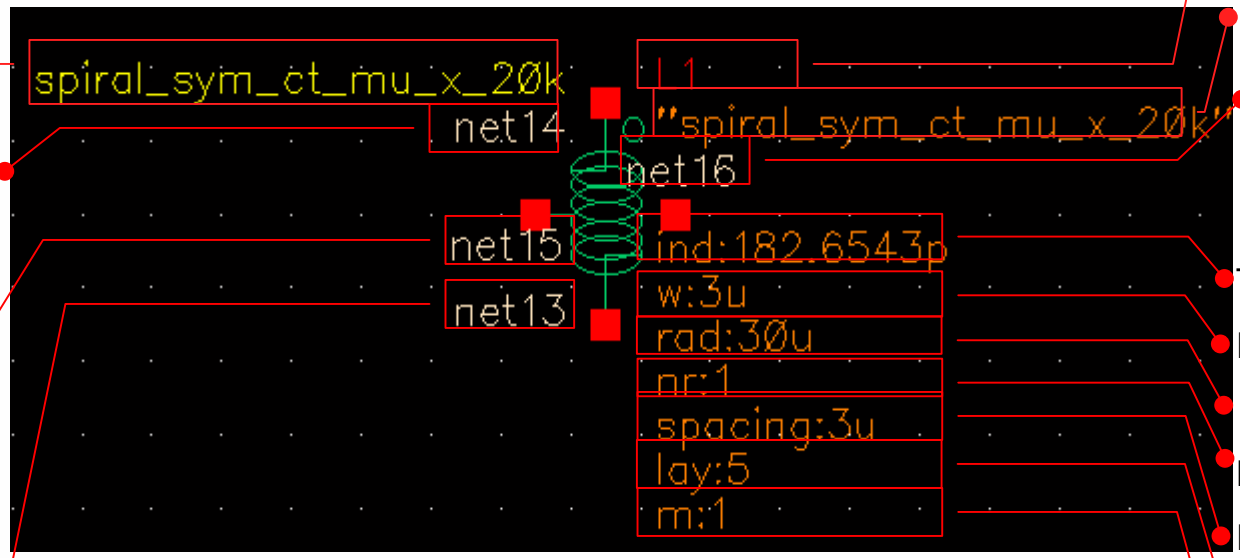

Device name

The net name that connects to PLUS terminal

The net name that connects to CTAP terminal

The net name that connects to MINUS terminal

Device instance name

Model name

The net name that connects to BULK terminal

Total inductance

Inductor width

Inductor radius

Number of turns

Inductor spacing

Inductor metal layer

Number of parallel device

TSMC Confidential Information 556786 PGC PROGATE GROUP CORPORATION 07/15/2003

Empowering Innovation SM

Confidential
Security C

- **The Symbol Display Information:**
  - The following figure shows the symbol for a 2 terminal pad_device:

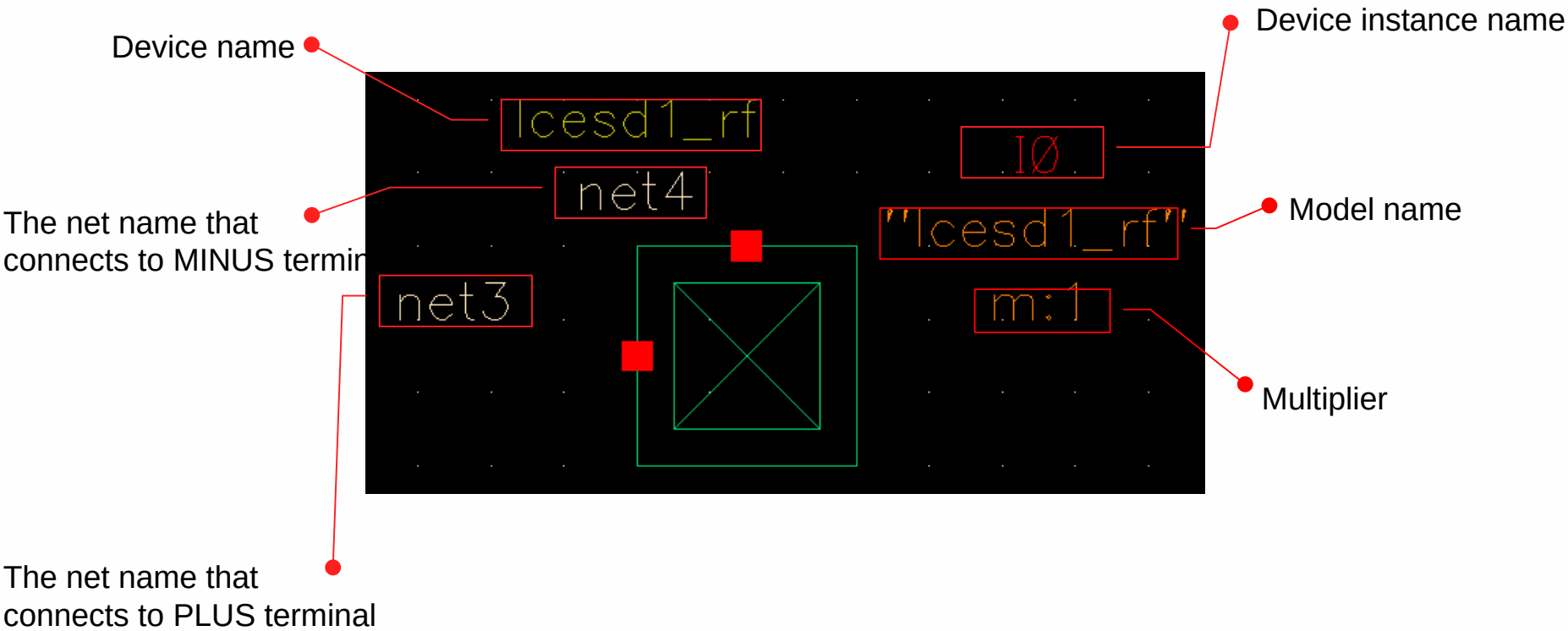

TSMC Confidential Information 556786 PGC PROGATE GROUP CORPORATION 07/15/2013

Empowering Innovation SM

TSMC018 PDK Usage Guide

Confidential
Security C

- **The Symbol Display Information:**
  - The following figure shows the symbol for an inverter gate :

P: P pin

Pb: Pb pin

inv

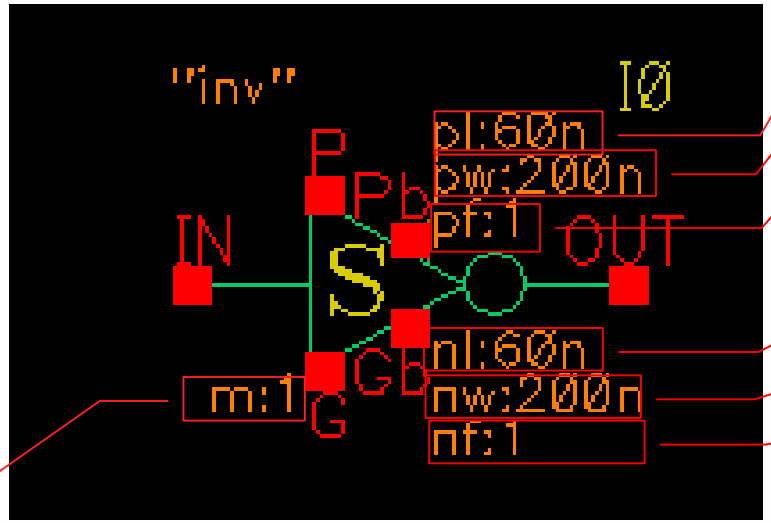

IN: Input terminal

PMOS length

PMOS width

PMOS fingers

OUT: Output terminal

NMOS length

NMOS width

NMOS fingers

Numbers of parallel devices

G: G pin

Gb: Gb pin

TSMC Confidential Information 556786 PGC PROGATE GROUP CORPORATION 07/15/2013

Empowering Innovation SM

TSMC018 PDK Usage Guide

Confidential
Security C

- **The Symbol Display Information:**
  - The following figure shows the symbol for a nand-2T gate :

P: P pin

Pb: Pb pin

nand2

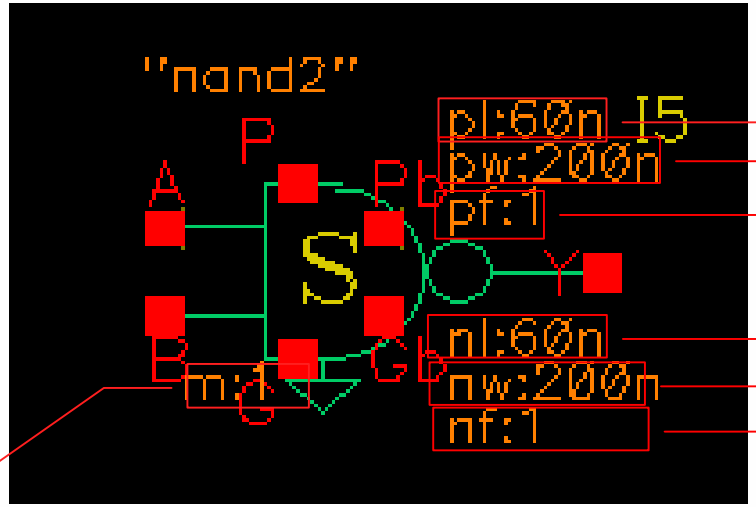

PMOS length

PMOS width

PMOS fingers

A: First input terminal

B: Second input terminal

Y: Output terminal

NMOS length

NMOS width

NMOS fingers

Numbers of parallel devices

G: G pin

Gb: Gb pin

TSMC Confidential Information 556786 PGC PROGATE GROUP CORPORATION 07/15/2003

Empowering Innovation SM

Confidential
Security C

- **The Symbol Display Information:**
  - The following figure shows the symbol for a nand-3T gate :

P: P pin

Pb: Pb pin

nand3

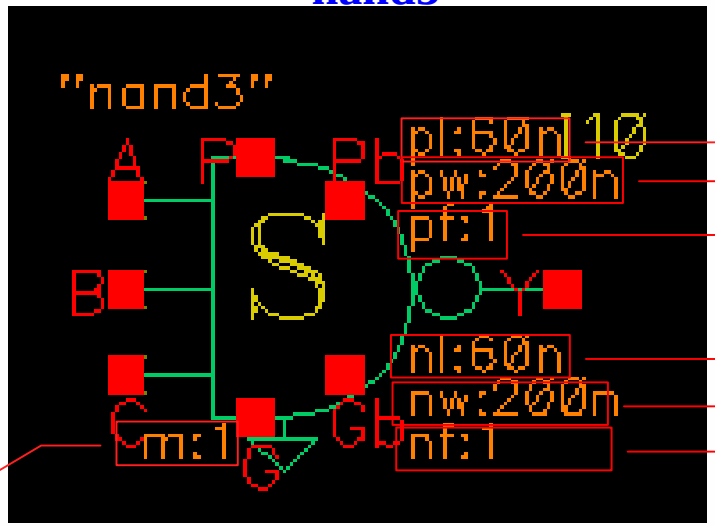

PMOS length

PMOS width

PMOS fingers

A: First input terminal

B: Second input terminal

C: Third input terminal

Y: Output terminal

NMOS length

NMOS width

NMOS fingers

Numbers of parallel devices

G: G pin

Gb: Gb pin

TSMC Confidential Information 556786 PGC PROGATE GROUP CORPORATION 07/15/2003

Empowering Innovation SM

Confidential
Security C

- **The Symbol Display Information:**
  - The following figure shows the symbol for a nand-4T gate :

P: P pin

Pb: Pb pin

nand4

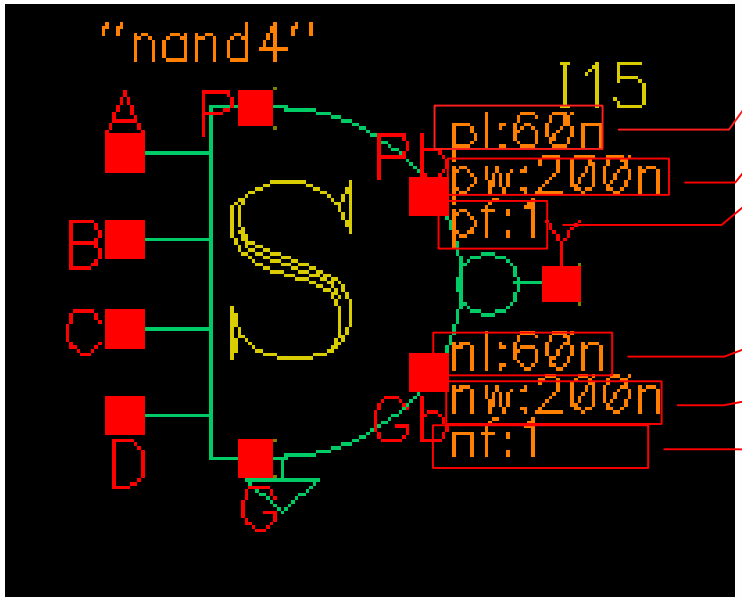

G: G pin

Gb: Gb pin

A: First input terminal

B: Second input terminal

C: Third input terminal

D: Fourth input terminal

- PMOS length
- PMOS width
- PMOS fingers

Y: Output terminal

- NMOS length
- NMOS width
- NMOS fingers

TSMC Confidential Information 556786 PGC PROGATE GROUP CORPORATION 07/15/2013

Empowering Innovation SM

TSMC018 PDK Usage Guide

- **The Symbol Display Information:**
  - The following figure shows the symbol for a nor-2T gate :

P: P pin

Pb: Pb pin

nor2

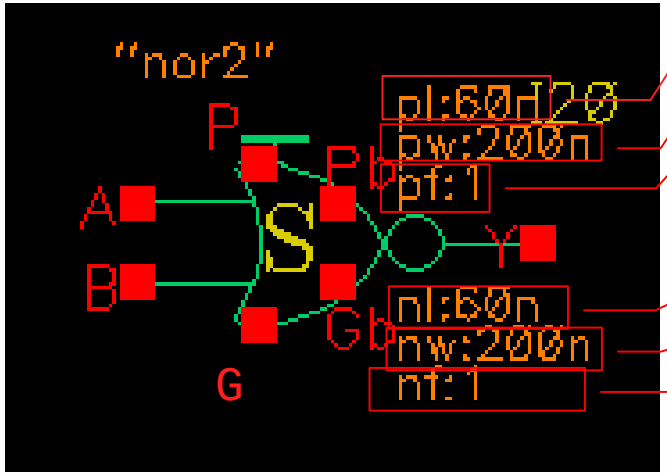

PMOS length

PMOS width

PMOS fingers

Y: Output terminal

A: First input terminal

B: Second input terminal

NMOS length

NMOS width

NMOS fingers

G: G pin

Gb: Gb pin

TSMC Confidential Information 556786 PGC PROGATE GROUP CORPORATION 07/15/2013

TSMC018 PDK Usage Guide

- **The Symbol Display Information:**
  - The following figure shows the symbol for a nor-3T gate :

P: P pin

Pb: Pb pin

nor3

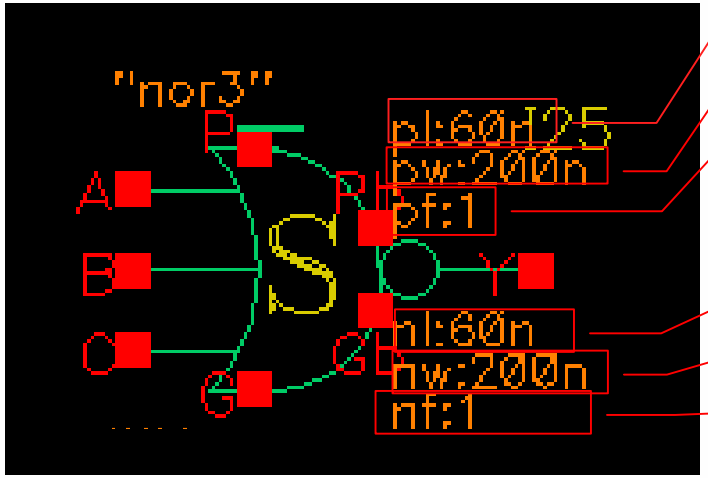

PMOS length

PMOS width

PMOS fingers

Y: Output terminal

NMOS length

NMOS width

NMOS fingers

A: First input terminal

B: Second input terminal

C: Third input terminal

G: G pin

Gb: Gb pin

TSMC Confidential Information 556786 PGC PROGATE GROUP CORPORATION 07/15/2013

Empowering Innovation SM

Confidential
Security C

- **The Symbol Display Information:**
  - The following figure shows the symbol for a nor-4T gate :

P: P pin

Pb: Pb pin

nor4

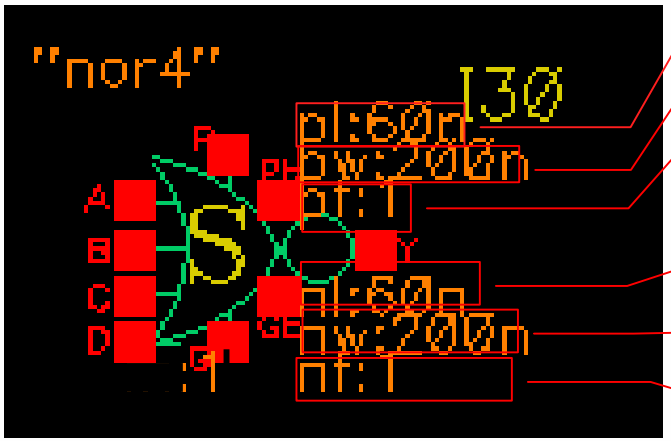

PMOS length

PMOS width

PMOS fingers

A: First input terminal

B: Second input terminal

C: Third input terminal

D: Fourth input terminal

Y: Output terminal

NMOS length

NMOS width

NMOS fingers

G: G pin

Gb: Gb pin

TSMC Confidential Information 556786 PGC PROGATE GROUP CORPORATION 07/15/2003

Empowering Innovation SM

Confidential
Security C

- **The Symbol Display Information:**
  - The following figure shows the symbol for a pass gate :

P: P pin

Cb: Cb pin

pass

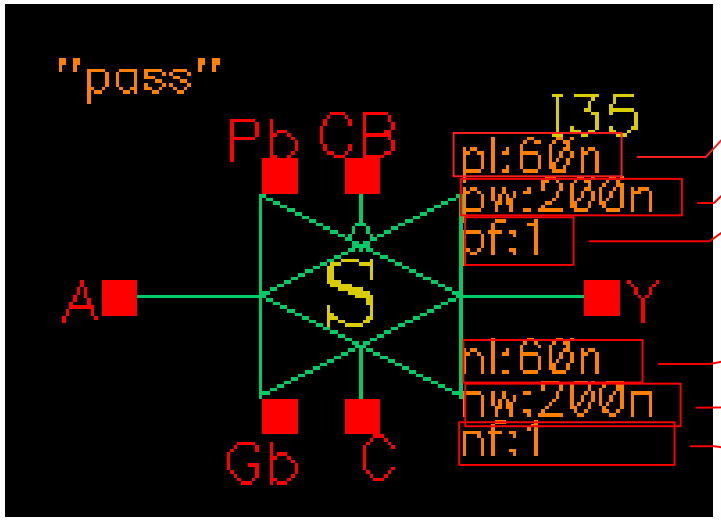

PMOS length

PMOS width

PMOS fingers

Y: Output terminal

A: First input terminal

NMOS length

NMOS width

NMOS fingers

G: G pin

C: C pin

TSMC Confidential Information 556786 PGC PROGATE GROUP CORPORATION 07/15/2013

Empowering Innovation SM

TSMC018 PDK Usage Guide

Confidential
Security C

- **The Symbol Display Information:**
  - The following figure shows the symbol for a Tri state inverter gate :

P: P pin

Cb: Cb pin

tir

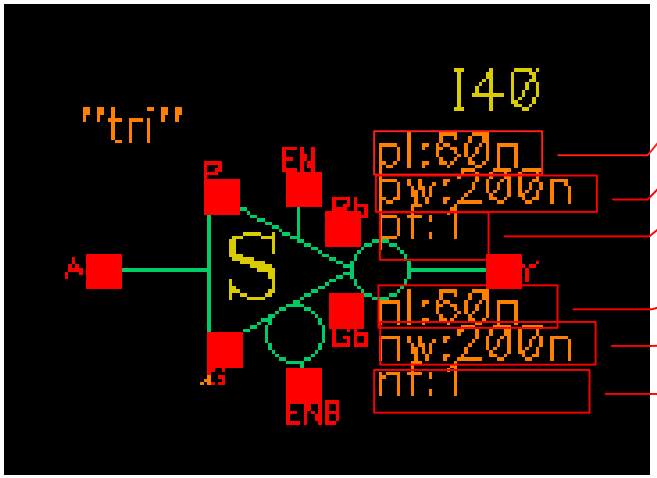

A: First input terminal

PMOS length

PMOS width

PMOS fingers

Y: Output terminal

NMOS length

NMOS width

NMOS fingers

G: G pin

C: C pin

TSMC Confidential Information 556786 PGC PROGATE GROUP CORPORATION 07/15/2013

Empowering Innovation SM

TSMC018 PDK Usage Guide

Confidential
Security C

- **Device Table:**
  - The devices in this PDK are list as below table:

Categories	Device
Bipolar	npn, npn_mis, vpnp, vpnp3, vpnp_mis
Capacitor_BB	crtmom, cfmom, cfmom_mx, mimcap_1p0_sin_3t, mimcap_1p0_sin,
	mimcap_2p0_sin_3t, mimcap_2p0_sin
Capacitor_rf	mimcap_rf_2p0, mimcap_rf_40k_2p0, cfmom_rf
Diode	dioden, dioden3v, diodenw, diodenw3v, diodep, diodep3v, ndio_m, ndio_3m, pdio_m
	sbd_rf, sbd_rf_nw
Mos	nmos2vx, nmos2vdnwx, nmos3vx, nmos3vdnwx, nmosmvt2vx, nmosmvt3vx,
	nmosnvt2vx, nmosnvt3vx, pmos2vx, pmos3vx, pmosmvt2vx, nmos2v_macx,
	nmos3v_macx, nmosmvt2v_macx, pmos3v_macx, pmosmvt2v_macx,
	nmosmvt3v_macx, nmosnvt2v_macx, nmosnvt3v_macx, pmos2v_macx,
	nmos2v, nmos2vdnw, nmos3v, nmos3vdnw,
	nmosmvt2v, nmosmvt3v, nmosnvt2v, nmosnvt3v, pmos2v, pmos3v, pmosmvt2v
Mos_rf	rfnmos2v, rfnmos3v, rfpmos2v, rfpmos3v, rfpmos2v_nw, rfpmos3v_nw,
	rfpmos2v_5t, rfpmos2v_nw_5t, rfpmos3v_5t, rfpmos3v_nw_5t,
	rfnmos2v_6t, rfnmos3v_6t,
Mos_mac	pmosmvt2v_mac, nmos2v_mac, nmos3v_mac, nmosmvt2v_mac, nmosmvt3v_mac,
	nmosnvt2v_mac, nmosnvt3v_mac, pmos2v_mac, pmos3v_mac
Res	rm1, rm2, rm3, rm4, rm5, rmt, rmu_40k
	rnhpoly, rpplus_2t, rphpoly, rnlplus_2t, rnlpoly,
	rnplus_2t, rnwell, rnwod_2t, rphripoly, rplplus_2t, rplpoly,
	rnhpoly_dis, rnlplus, rnlpoly_dis, rnplus, rnwod, rnwsti_m, rphpoly_dis, rphripoly_dis,
	rphripoly_rf, rplpoly_rf, rphpoly_rf, rplplus, rplpoly_dis, rpplus
Special divice	dio_dnwpsub, dio_pwdnw, diodesd3v
Varactor	mos_var_b, mos_var_b3, jvar, moscap_rf, moscap_rf_nw, moscap_rf33, moscap_rf33_nv

TSMC Confidential Information 556786 PGC PROGATE GROUP CORPORATION 07/15/2013

Empowering Innovation SM

TSMC018 PDK Usage Guide

Confidential
Security C

- **Device Table:**
  - The devices in this PDK are list as below table:

Logic Gates	Device
pass	pass_2v, pass_3v, pass_mvt2v, pass_2v_mac, pass_3v_mac, pass_mvt2v_mac,
Tri	tri_2v, tri_3v, tri_mvt2v, tri_2v_mac, tri_3v_mac, tri_mvt2v_mac,
Nor	nor2_2v, nor2_3v, nor2_mvt2v, nor3_2v, nor3_3v, nor3_mvt2v, nor4_2v, nor4_3v,
	nor4_mvt2v, nor2_2v_mac, nor2_3v_mac, nor2_mvt2v_mac, nor3_2v_mac,
	nor3_3v_mac, nor3_mvt2v_mac, nor4_2v_mac, nor4_3v_mac, nor4_mvt2v_mac
Nand	nand2_2v, nand2_3v, nand2_mvt2v, nand3_2v, nand3_3v, nand3_mvt2v, nand4_2v,
	nand4_3v, nand4_mvt2v, nand2_2v_mac, nand2_3v_mac, nand2_mvt2v_mac,
	nand3_2v_mac, nand3_3v_mac, nand3_mvt2v_mac, nand4_2v_mac, nand4_3v_mac,
	nand4_mvt2v_mac
Inv	inv_2v, inv_3v, inv_mvt2v, inv_2v_mac, inv_3v_mac, inv_mvt2v_mac
	Device
PAD	lcesd1_rf, lcesd2_rf
Inductor	spiral_std_mu_x_20k, spiral_sym_mu_x_20k, spiral_sym_ct_mu_x_20k,
	spiral_std_mu_x_40k, spiral_sym_mu_x_40k, spiral_sym_ct_mu_x_40k

TSMC Confidential Information 556786 PGC PROGATE GROUP CORPORATION 07/15/2013

Empowering Innovation SM

TSMC018 PDK Usage Guide

Confidential
Security C

MOS Parameterized Cell Function Introduction:

- The **schematic** component description format (CDF) parameter in MOS are list as below:

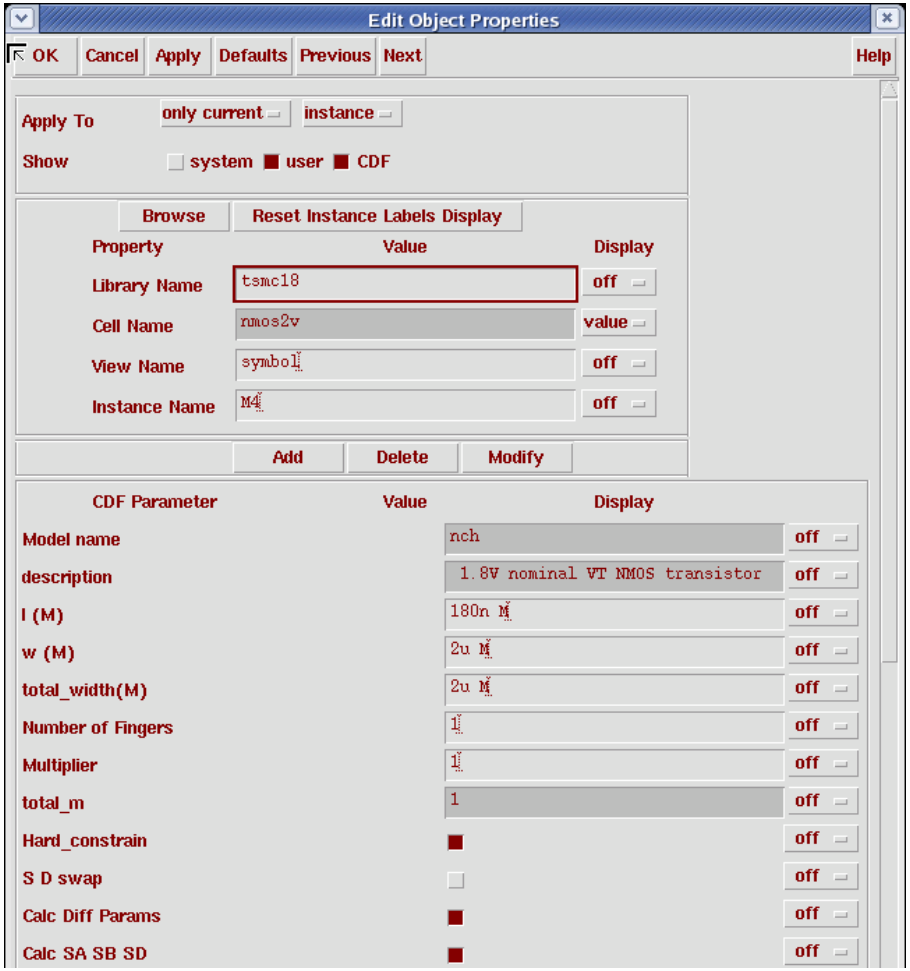

◆**Model name:** Display Model name information.
(These parameters can't be modify in CDF form)

◆**Description:** Display device description.
(These parameters can't be modify in CDF form)

◆**L (M):** Channel length of the device.

◆**W (M):** Channel width of the device.

◆**Total_width(M):** Total channel width of this device, equal to width x fingers.

◆**Number of Fingers_(N):** Numbers of poly fingers.

Check here for more information

◆**Multiplier:** Numbers of parallel MOS device.

Check here for more information

◆**Total_m:** Display numbers of parallel MOS device.
(This parameter can't be modify in CDF form)

◆**Hard_constrain:** This function provides an option to constrain the value for each parameter in this device.

◆**S D swap:** Enable this function to swap source and drain terminal.

◆**Calc Diff Params:** The switch provide to modify simulation parameters.

◆**Calc SA SB SD:** The switch provide to modify simulation SA, SB and SB.

Next page

Back to Device Table

Empowering Innovation

TSMC Confidential Information 556786 PGC PROGATE GROUP CORPORATION 07/15/2003

TSMC018 PDK Usage Guide

Confidential
Security C

MOS Parameterized Cell Function Introduction:

- The **schematic** component description format (CDF) parameter in MOS are list as below:

Front page

Source_area	9.6e-13	off
Drain_area	9.6e-13	off
Source_periphery_(M)	4.96u M	off
Drain_periphery_(M)	4.96u M	off
NRS	0.135	off
NRD	0.135	off
SA(LOD_effect)_(M)	480n M	off
SB(LOD_effect)_(M)	480n M	off
Well Proximity Effect Cal. Method	off	off
LDE pre-set	Preset1	off
Gate_to_Right_NWell_Enc(SC_R) (M)	910n M	off
Gate_to_Left_NWell_Enc(SC_L) (M)	910n M	off
Gate_to_Top_NWell_Enc(SC_T) (M)	430n M	off
Gate_to_Bottom_NWell_Enc(SC_B) (M)	430n M	off
SCA	0	off
SCB	0	off
SCC	0	off

- **Source_area:** Source area (AS) - for simulate use.
- **Drain_area:** Drain area (AD) - for simulate use.
- **Source_periphery:** Source periphery (PS) - for simulate use.
- **Drain_periphery:** Drain periphery (PD) - for simulate use.
- **NRS:** Number of squares source resistance – for simulate use.
- **NRD:** Number of squares drain resistance – for simulate use.
- **SA(LOD_effect)_(M):** LOD effect parameter – for simulate use.
- **SA(LOD_effect)_(M):** LOD effect parameter – for simulate use.

- **LDE pre-set:** MOS LDE effect pre-set parameter, Gate to N-well enclosure distance - for simulate use.

- **SCA (M):** WPE SCA parameter. - for simulate use
- **SCB (M):** WPE SCB parameter. - for simulate use
- **SCC (M):** WPE SCC parameter. - for simulate use

Check here for more information

TSMC Confidential Information 556786 PDC BROGATE GROUP CORPORATION 07/15/2003

Back to Device Table

TSMC018 PDK Usage Guide

Confidential
Security C

MOS Parameterized Cell Function Introduction:

- The **layout** component description format (CDF) parameter in MOS are list as below:

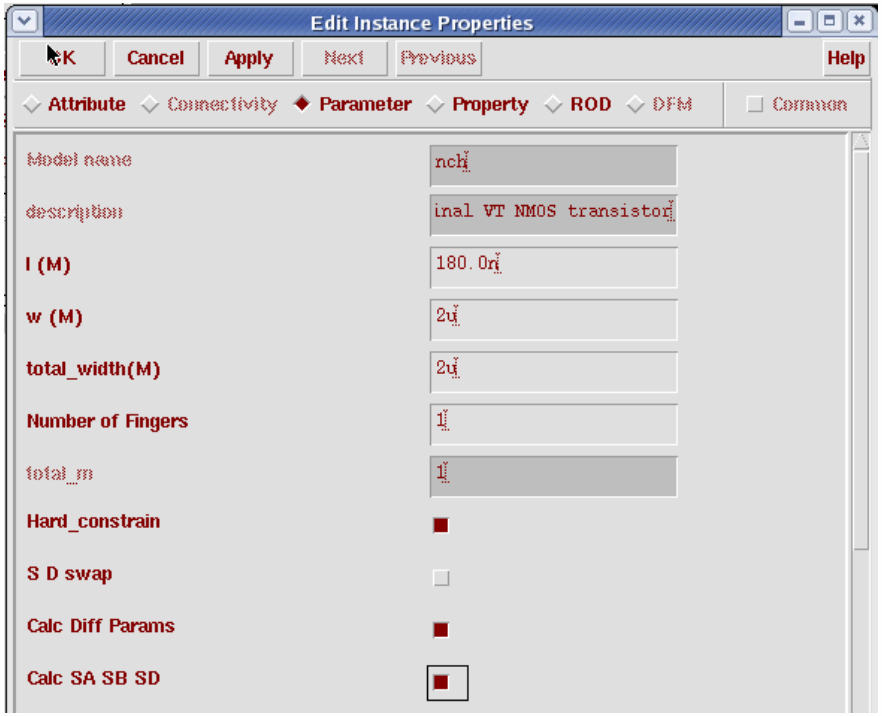

◆**Model name:** Display Model name information.
(These parameters can't be modify in CDF form)

◆**Description:** Display device description.
(These parameters can't be modify in CDF form)

◆**L (M):** Channel length of the device.

◆**W (M):** Channel width of the device.

◆**Total_width(M):** Total channel width of this device, equal to width x fingers.

◆**Number of Fingers_(N):** Numbers of poly fingers.

Check here for more information

◆**Total_m:** Display numbers of parallel MOS device.
(This parameter can't be modify in CDF form)

◆**Hard_constrain:** This function provides an option to constrain the value for each parameter in this device.

◆**S D swap:** Enable this function to swap source and drain terminal.

◆**Calc Diff Params:** The switch provide to modify simulation parameters. *Check here for more information*

◆**Calc SA SB SD:** The switch provide to modify simulation SA, SB and SB.

Next page

TSMC Confidential Information 556786 PGC PROGATE GROUP CORPORATION 07/15/2003

Back to Device Table

Empowering Innovation

TSMC018 PDK Usage Guide

Confidential
Security C

MOS Parameterized Cell Function Introduction:

- The **layout** component description format (CDF) parameter in MOS are list as below:

Front page

Source_area	9.6e-13
Drain_area	9.6e-13
Source_periphery_(M)	4.96u
Drain_periphery_(M)	4.96u
NRS	0.135
NRD	0.135
SA(LOD_effect)_(M)	480.0n
SB(LOD_effect)_(M)	480.0n
Well Proximity Effect Cal. Method	off
LDE pre-set	Preset1
Gate_to_Right_NWell_Enc(SC_R)(M)	910n
Gate_to_Left_NWell_Enc(SC_L)(M)	910n
Gate_to_Top_NWell_Enc(SC_T)(M)	430n
Gate_to_Bottom_NWell_Enc(SC_B)(M)	430n

- **Source_area:** Source area (AS) - for simulate use.
- **Drain_area:** Drain area (AD) - for simulate use.
- **Source_periphery:** Source periphery (PS) - for simulate use.
- **Drain_periphery:** Drain periphery (PD) - for simulate use.
- **NRS:** Number of squares source resistance – for simulate use.
- **NRD:** Number of squares drain resistance – for simulate use.

- **SA(LOD_effect)_(M):** LOD effect parameter – for simulate use.
- **SB(LOD_effect)_(M):** LOD effect parameter – for simulate use.

- **Well Proximity Effect Cal. Method:**
  two entry methods for WPE parameters:
  off => use model default values.
  custom => user input desire value by self.
- **LDE pre-set:** MOS LDE effect pre-set parameter, Gate to N-well enclosure distance - for simulate use.

Next page

Back to Device Table

Empowering Innovation

TSMC Confidential Information 556786 PROGATE GROUP CORPORATION 07/15/2013

TSMC018 PDK Usage Guide

Confidential
Security C

MOS Parameterized Cell function Introduction:

- The **layout** component description format (CDF) parameter in MOS are list as below:

Front page

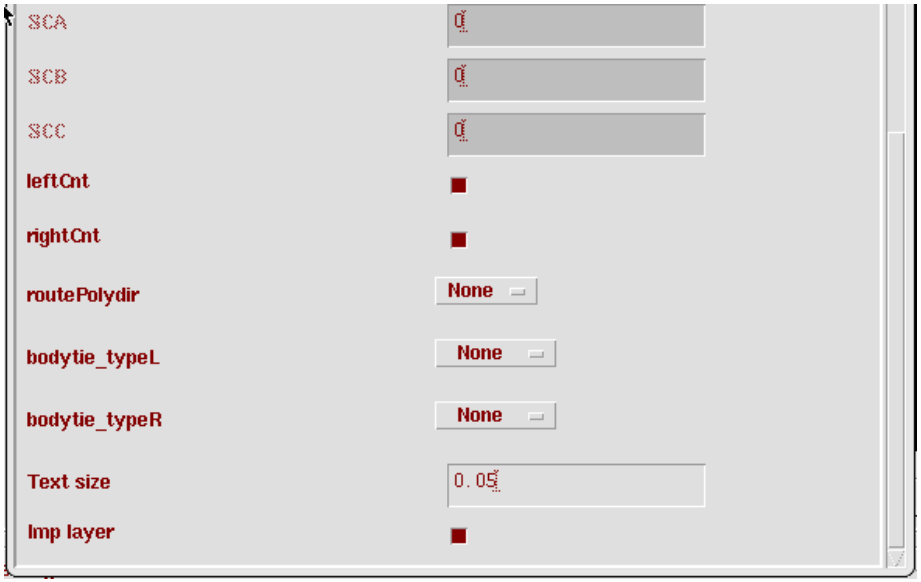

- **SCA (M):** WPE SCA parameter. - for simulate use
- **SCB (M):** WPE SCB parameter. - for simulate use
- **SCC (M):** WPE SCC parameter. - for simulate use
- **leftCnt:** A option for drawing poly-left diffusion area metal1 connection.
- **rigthCnt:** A option for drawing poly-right diffusion area metal1 connection.
- **routePolydir:**(***None***, ***Top***, ***Bottom***, ***Both***) A option for drawing poly gate connection.

Check here for more information

- **bodytie_typeL:** (***None***, ***Integred***, ***Detached***) A option for drawing body connection.
- **bodytie_typeR:** (***None***, ***Integred***, ***Detached***) A option for drawing body connection.

Check here for more information

- **Text size:** The function can modify the font value in layout view.
- **Imp layer:** The function provide a option for well implant.

TSMC Confidential Information 556786 PGC PROGATE GROUP CORPORATION 07/15/2003

Back to Device Table

Empowering Innovation

TSMC018 PDK Usage Guide

Confidential
Security C

MOS Parameterized Cell Function Introduction:

- The **schematic** component description format (CDF) parameter in rf_MOS are list as below:

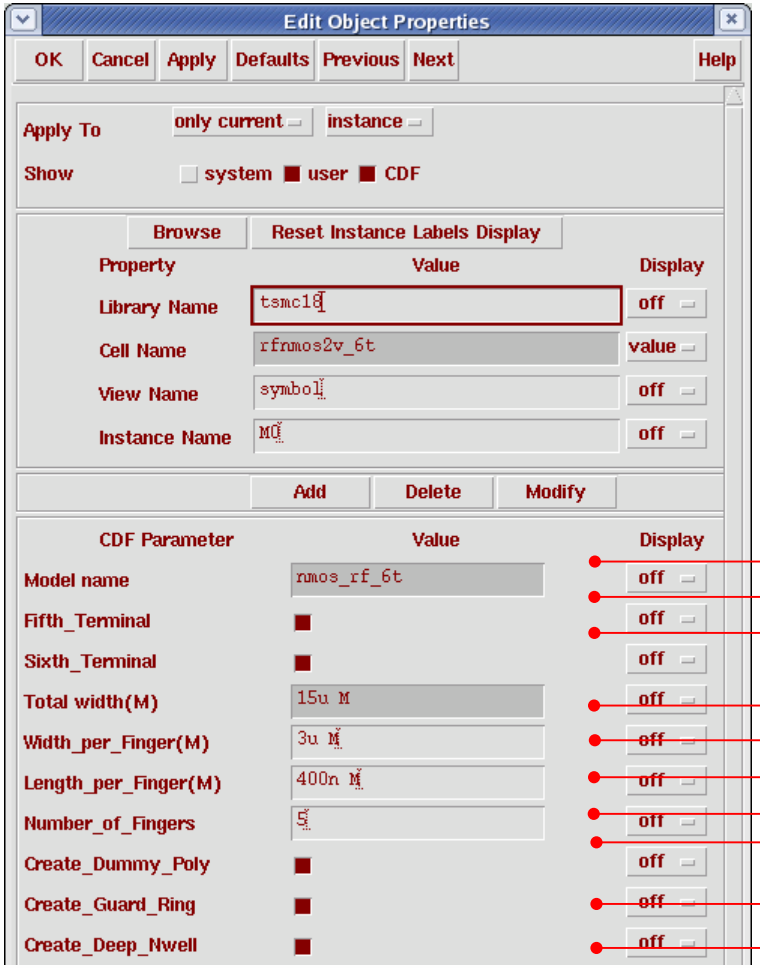

◆**Model name:** Display Model name information.
(These parameters can't be modify in CDF form)

◆**Fifth_terminal(M):** An option for the fifth terminal.
Sixth_terminal(M): An option for the sixth parameter.

◆**Total_width(M):** Total channel width of this device, equal to width x fingers.

◆**Width_per_finger(M):** Channel width of the device.

◆**Length_per_finger(M):** Channel length of the device.

◆**Number of Fingers:** Numbers of poly fingers.

Check here for more information

◆**Create_Dummy_poly:** This function provides an option for create dummy poly

◆**Create_Guard_Ring:** Display guard ring in MOS device.

◆**Create_Deep_Nwell:** This function provides an option for create deep Nwell.

Next page

Back to Device Table

Empowering Innovation

TSMC Confidential Information 556786 PGC PROGATE GROUP CORPORATION 07/15/2003

TSMC018 PDK Usage Guide

Confidential
Security C

MOS Parameterized Cell Function Introduction:

- The **schematic** component description format (CDF) parameter in rf_MOS are list as below:

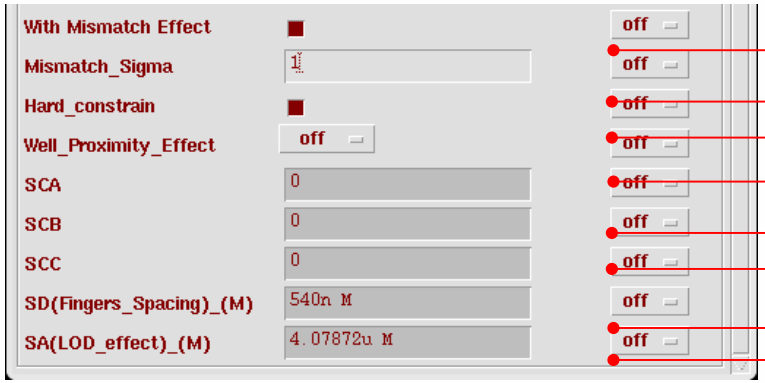

◆**With Mismatch Effect:** Option for run mismatch effect

◆**Mismatch_sigma:** The value determinate the mismatch effect distribution range on statistics.

◆**Hard_constrain:** This function provides an option for constrain

◆**Well_Proximity_Effect:** Option for WEP - for simulate use

◆**SCA :** WPE SCA parameter. - for simulate use

◆**SCB :** WPE SCB parameter. - for simulate use

◆**SCC :** WPE SCC parameter. - for simulate use

◆**SD(Fingers_Spacing)_(M):** LOD effect parameter – for simulate use

◆**SA(LOD_effect)_(M):** LOD effect parameter – for simulate use.

TSMC Confidential Information 556786 PGC PROGATE GROUP CORPORATION 07/15/2003

Back to Device Table

Empowering Innovation

TSMC018 PDK Usage Guide

Confidential
Security C

MOS Parameterized Cell Function Introduction:

- The **layout** component description format (CDF) parameter in MOS are list as below:

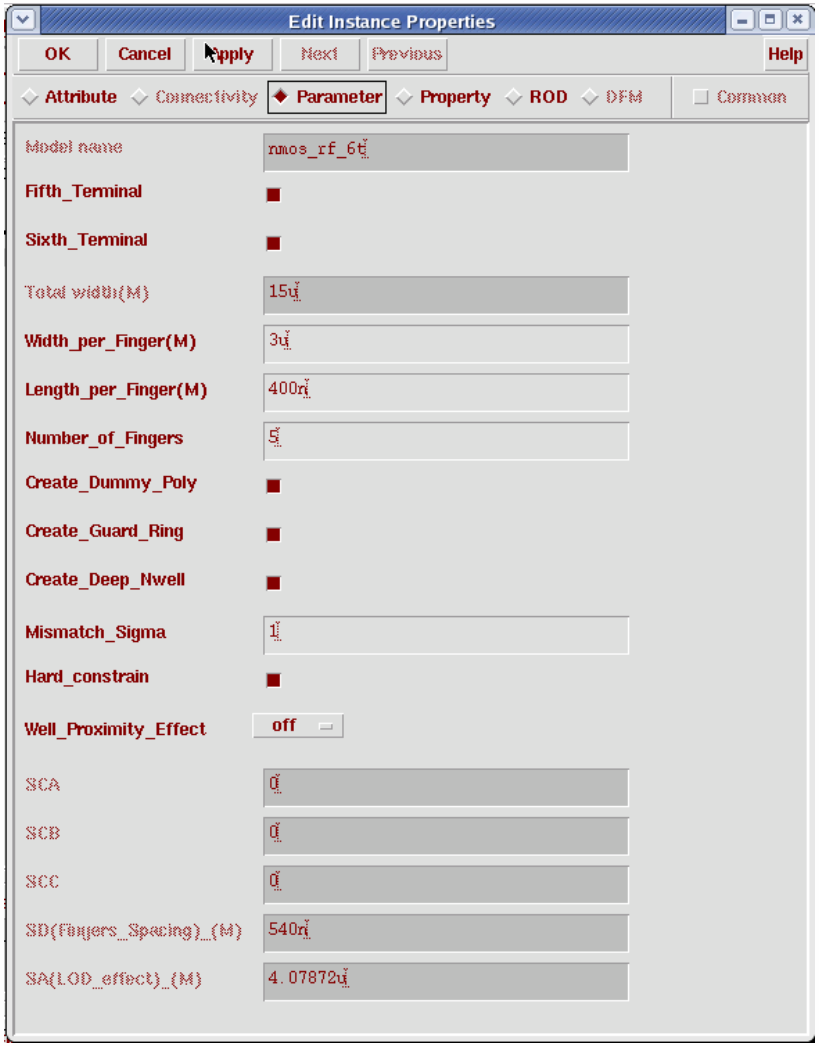

- **Model name:** Display Model name information.
- **Fifth_terminal(M):** An option for the fifth terminal.
- **Sixth_terminal(M):** An option for the sixth terminal.
- **Total_width(M):** Total channel width of this device, equal to width x fingers.
- **Width_per_finger(M):** Channel width of the device.
- **Length_per_finger(M):** Channel length of the device.
- **Number of Fingers:** Numbers of poly fingers.
- **Create_Dummy_poly:** This function provides an option for create dummy poly
- **Create_Guard_Ring:** Display guard ring in MOS device.
- **Create_Deep_Nwell:** An option for create deep Nwell
- **With Mismatch Effect:** An option for run mismatch effect
- **Mismatch_sigma:** The value determinate the mismatch effect distribution range on statistics.
- **Hard_constrain:** This function provides an option to constrain
- **Well_Proximity_Effect:** Option for WEP - for simulate use
- **SCA/SCB/SCC :** WPE SCA parameter. - for simulate use
- **SD(Fingers_Spacing)_(M):** LOD effect parameter
- **SA(LOD_effect)_(M):** LOD effect parameter – for simulate use.

(Parameters with pale hue can't be modify in CDF form)

TSMC Confidential Information 556786 PGC PROGATE GROUP CORPORATION 07/15/2003

Back to Device Table

Empowering Innovation

Confidential
Security C

BJT Parameterized Cell Function Introduction:

- The **schematic** component description format (CDF) parameters in BJT are list as below:

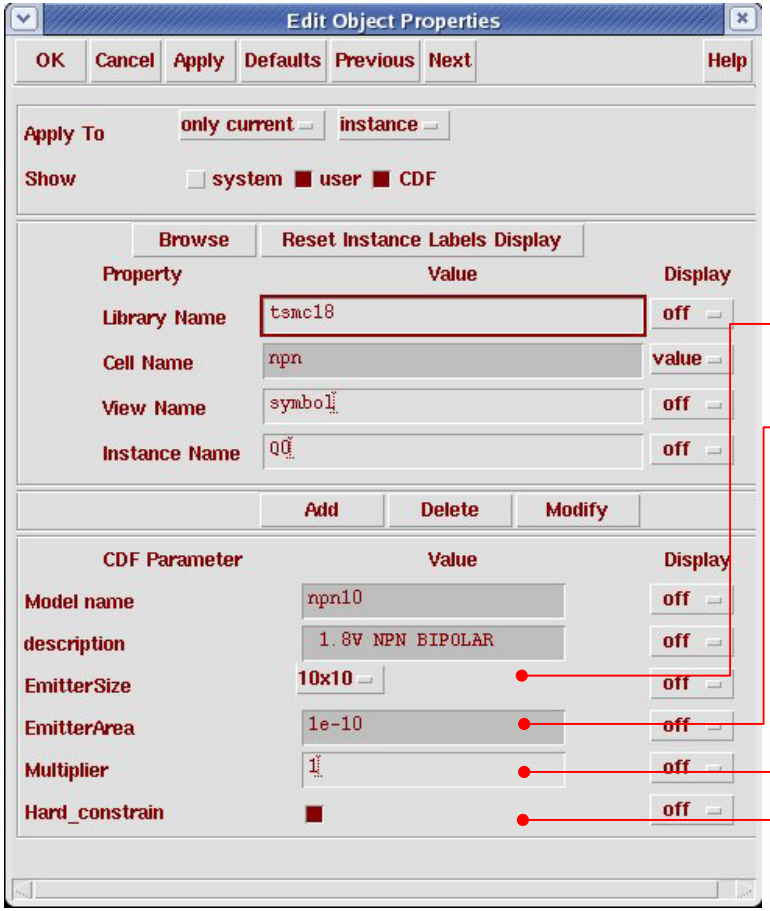

◆**Model name:** Display model name information.

◆**Description:** Display device description.

(These parameter can't be modify in CDF form)

◆**EmitterSize:** (***2X2***, ***5X5***, ***10X10***) Select the bjt dimension in design layout.

Check here for more information

◆**EmitterArea:** Display the bjt emitter area.

(This parameter can't be modify in CDF form)

◆**Multiplier:** Numbers of parallel BJT device.

Check here for more information

◆**Hard_constrain:** This function provides an option to constrain the value for each parameter in this device.

TSMC Confidential Information 556786 PGC PROGATE GROUP CORPORATION 07/15/2013

Back to Device Table

Empowering Innovation

Confidential
Security C

Resistance (1) Parameterized Cell Function Introduction:

- The **schematic** component description format (CDF) parameter in resistance are list as below:

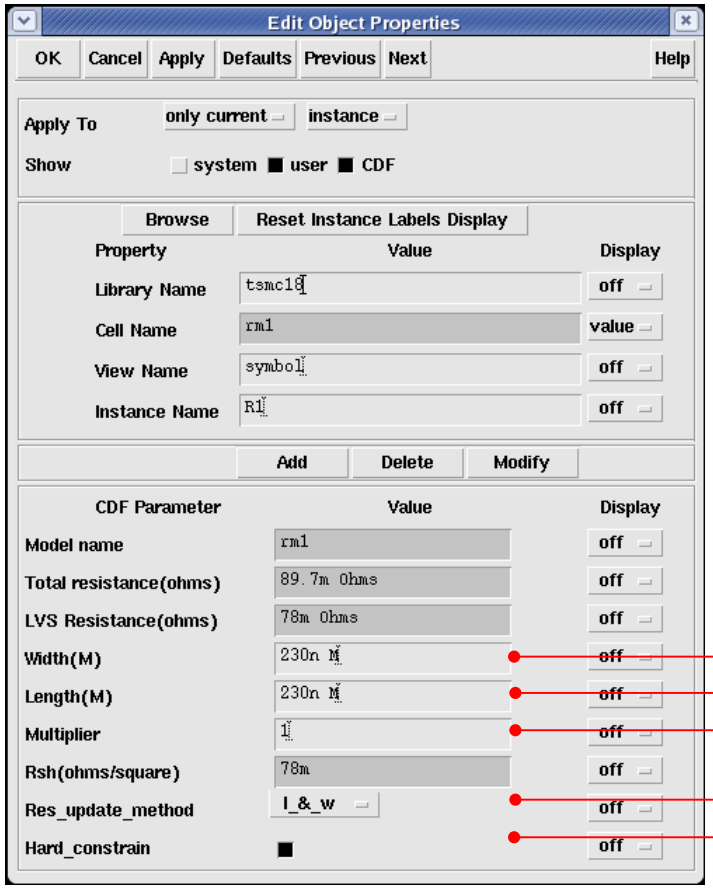

- **Model name:** Display model name information.
- **Total resistance(ohms):** Device resistance value.
- **LVS resistance (ohms) :** Display resistor for LVS compare.

(These parameter can't be modify in CDF form)

- **Width(M):** Device segment width.
- **Length(M):** Device segment length.

- **Multiplier:** Numbers of parallel Diode device.

Check here for more information

- **Rs(ohms/square):** Display the device Rs value.

(This parameter can't be modify in CDF form)

- **Res_update_method:** (***l_&_W***, ***Res_&_W***) Res update method, please review segment width and segment length function.
- **Hard_constrain:** This function provides an option to constrain the value for each parameter in this device.

TSMC Confidential Information 556786 PGC PROGATE GROUP CORPORATION 07/15/2003

Back to Device Table

Confidential
Security C

Resistance(2) Parameterized Cell Function Introduction:

- The **schematic** component description format (CDF) parameter in resistance are list as below:

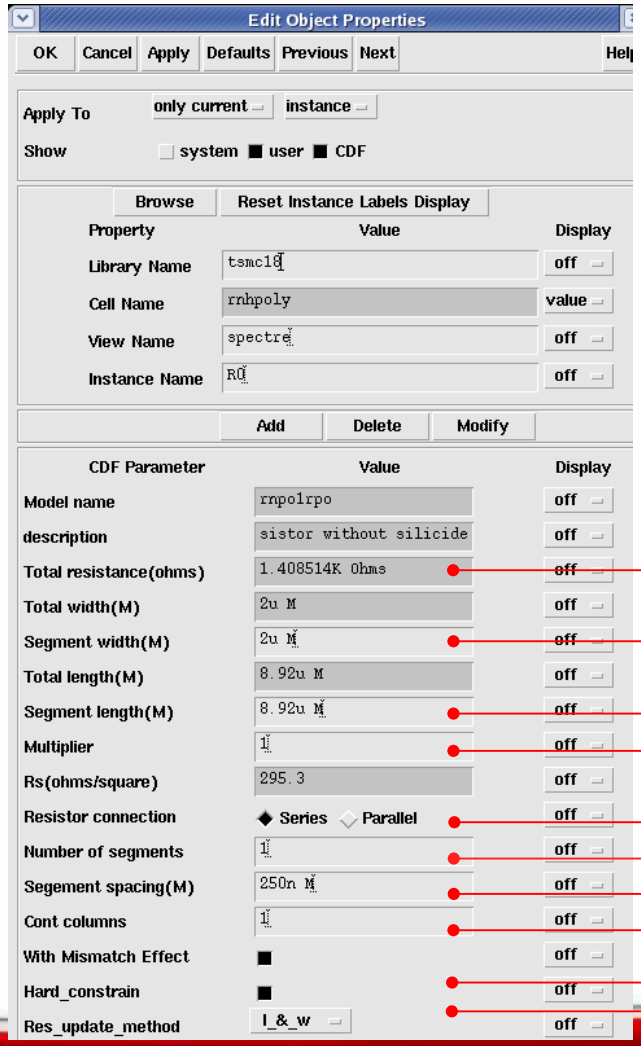

- **Model name:** Display model name information.
- **Description:** Display device description.

(These parameter can't be modify in CDF form)

- **Total resistance(ohms):** Device resistance value.
- **Segment width(M):** Device segment width.
- **Segment length(M):** Device segment length.

Check here for more information

- **Total width(M):** Display the device segment width.
- **Total length(M):** Display the device segment length.
- **Rs(ohms/square):** Display the device Rs value.

(These parameter can't be modify in CDF form)

- **Multiplier:** Numbers of parallel Diode device.

Check here for more information

- **Resistor connection:** Device resistance value.
- **Number of segment:** Device segment width.
- **Segment spacing(M):** Device segment length.

Check here for more information

- **Cont columns:** Device contact columns number.

Check here for more information

- **Hard_constrain:** This function provides an option to constrain the value for each parameter in this device.
- **Res_update_method:** (***l_&_W***, ***Res_&_W***) Res update method, please review segment width and segment length function.

Back to Device Table

Empowering Innovation

TSMC Confidential Information 556786 PGC PROGATE GROUP CORPORATION 07/15/2003

Confidential
Security C

Resistance(3) Parameterized Cell Function Introduction:

- The **schematic** component description format (CDF) parameter in resistance are list as below:

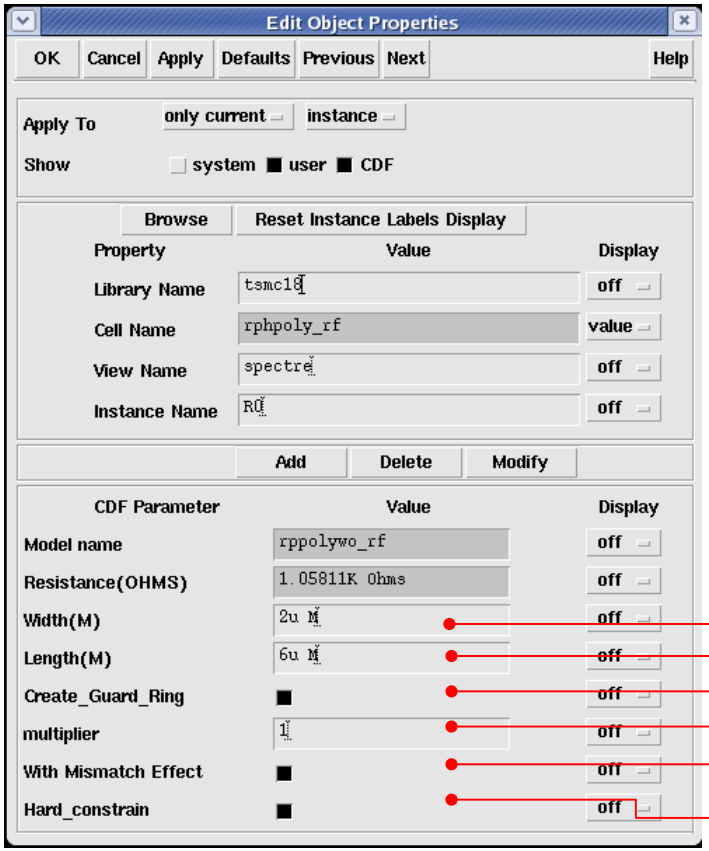

- **Model name:** Display model name information.
- **Resistance(OHMS):** Device total resistance value.
  (This parameter can't be modify in CDF form)
- **Width(M):** Device segment width.
- **Length(M):** Device segment length.
- **Create_Guard_Ring:** An option to create guard ring.
- **Multiplier:** Numbers of parallel Diode device.
  Check here for more information
- **With Mismatch Effect:** Turn on/off mismatch flag
- **Hard_constrain:** This function provides an option to constrain the value for each parameter in this device.

TSMC Confidential Information 556786 PGC PROGATE GROUP CORPORATION 07/15/2013

Back to Device Table

Empowering Innovation

Confidential
Security C

Diode Parameterized Cell Function Introduction:

- The **schematic** component description format (CDF) parameters in Diode are list as below:

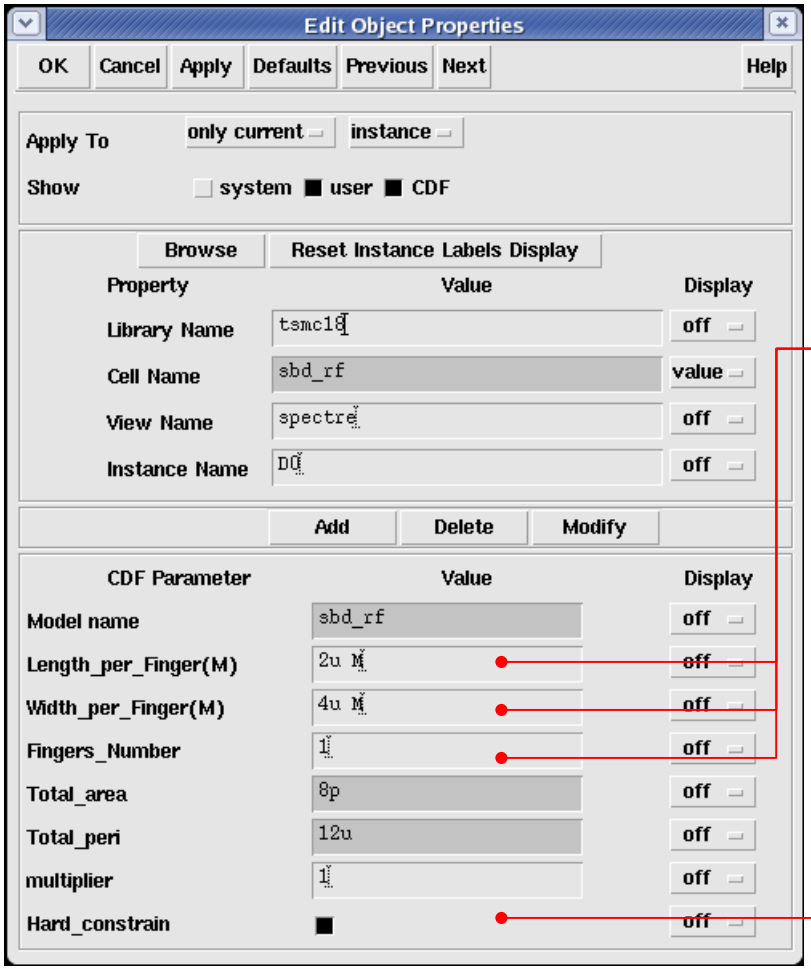

- **Model name:** Display model name information.
- **Diode_area:** Display the diode area.
- **Diode peri:** Display the diode periphery.

(These parameters can't be modify in CDF form)

- **Length_(M):** Junction length of the device.
- **Width_(M):** Junction Width of the device.
- **Fingers_Number:** Fingers
- **Total_area:** Diode total area
- **Total_peri:** Diode total periphery
- **Multiplier:** Numbers of parallel Diode device.

Check here for more information

- **Hard_constrain:** This function provides an option to constrain the value for each parameter in this device.

TSMC Confidential Information 556786 PGC PROGATE GROUP CORPORATION 07/15/2003

Back to Device Table

Empowering Innovation

Capacitor(1) Parameterized Cell Function Introduction:

- The **schematic** component description format (CDF) parameters in cfmom_mx are list as below:

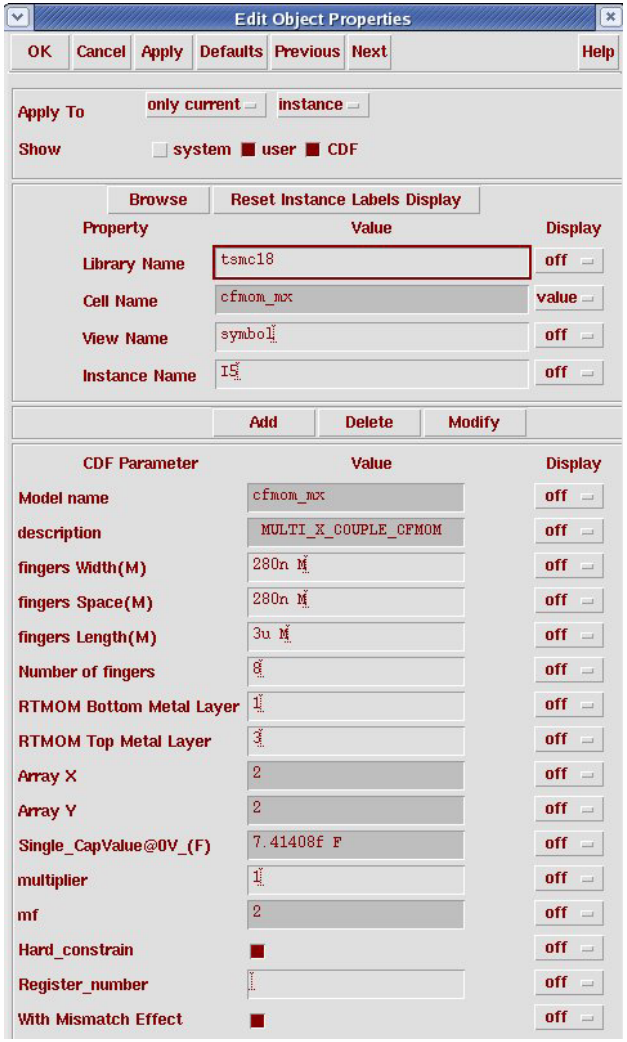

- **Model name:** Display model name information.
- **Description:** Display device description.

(These parameters can't be modify in CDF form)

- **Fingers width:** width for each finger
- **Fingers space:** space between each finger
- **Fingers length:** length for each finger
- **Number of fingers:** total numbers of fingers

- **RTMOM Bottom metal layer:** set up the bottom metal layer
- **RTMOM TOP metal layer:** set up the top metal layer

- **Array X:** Numbers of layout blocks in x direction.
- **Array Y:** Numbers of layout blocks in y direction.
- **Single_CapValue@0V(F):** Device capacitance information.

(This parameter can't be modify in CDF form)

- **Multiplier:** Numbers of parallel cfmom_mx devices.

Check here for more information

- **mf:** (Array X * Array Y) / 2.

(This parameter can't be modify in CDF form)

- **Hard_constrain:** This function provides an option to constrain the value for each parameter in this device.

- **Register_number:** Need a key from TSMC to display the layout view.

- **With Mismatch Effect:** Option for run mismatch effect

TSMC Confidential Information 556786 PGC PROGATE GROUP CORPORATION 07/15/2003

TSMC018 PDK Usage Guide

Confidential
Security C

Capacitor(2) Parameterized Cell Function Introduction:

- The **schematic** component description format (CDF) parameters in cfmom are list as below:

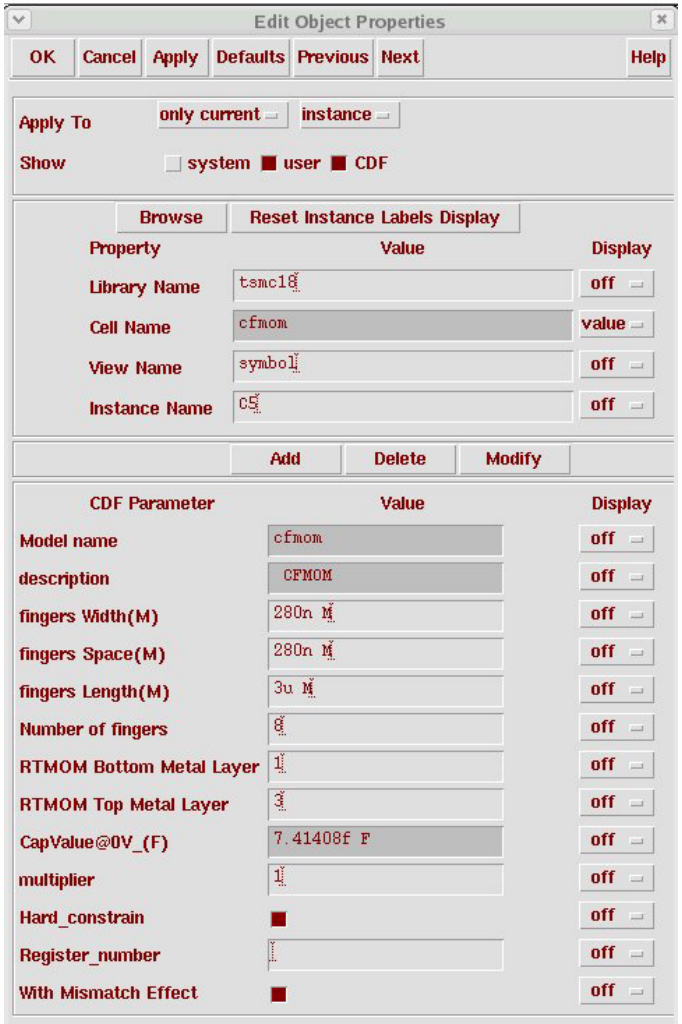

- **Model name:** Display model name information.
- **Description:** Display device description.

(These parameters can't be modify in CDF form)

- **Fingers width:** width for each finger
- **Fingers space:** space between each finger
- **Fingers length:** length for each finger
- **Number of fingers:** total numbers of fingers

- **RTMOM Bottom metal layer:** set up the bottom metal layer
- **RTMOM TOP metal layer:** set up the top metal layer

- **CapValue@0V(F):** Device capacitance information.

(This parameter can't be modify in CDF form)

- **Multiplier:** Numbers of parallel cfmom devices.

Check here for more information

- **Hard_constrain:** This function provides an option to constrain the value for each parameter in this device.

- **Register_number:** Need a key from TSMC to display the layout view.

- **With Mismatch Effect:** Option for run mismatch effect

TSMC Confidential Information 556786 PGC PROGATE GROUP CORPORATION 07/15/2003

Back to Device Table

Empowering Innovation

Confidential
Security C

Capacitor(3) Parameterized Cell Function Introduction:

- The **schematic** component description format (CDF) parameters in crtmom are list as below:

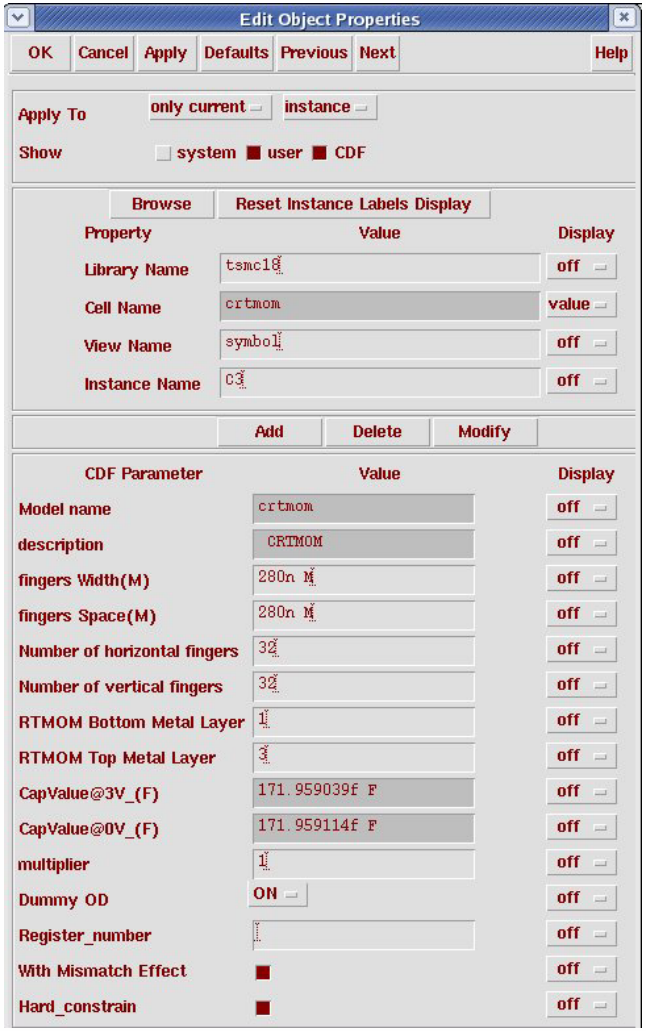

- **Model name:** Display model name information.
- **Description:** Display device description.

(These parameters can't be modify in CDF form)

- **Fingers width:** width for each finger
- **Fingers space:** space between each finger
- **Number of horizontal fingers:** total fingers in the horizontal direction
- **Number of vertical fingers:** total fingers in the vertical direction
- **RTMOM Bottom metal layer:** set up the bottom metal layer
- **RTMOM TOP metal layer:** set up the top metal layer
- **CapValue@3V(F):** Device capacitance information.
- **CapValue@0V(F):** Device capacitance information.

(This parameter can't be modify in CDF form)

- **Multiplier:** Numbers of parallel crtmom devices.

Check here for more information

- **Dummy OD:** Create shading OD to prevent from parasitic effects
- **Register_number:** Need a key from TSMC to display the layout view.
- **With Mismatch Effect:** Option for run mismatch effect
- **Hard_constrain:** This function provides an option to constrain the value for each parameter in this device.

TSMC Confidential Information 556786 PGC PROGATE GROUP CORPORATION 07/15/2003

Back to Device Table

Empowering Innovation

Confidential
Security C

Capacitor(4) Parameterized Cell Function Introduction:

- The **schematic** component description format (CDF) parameters in mimcap are list as below:

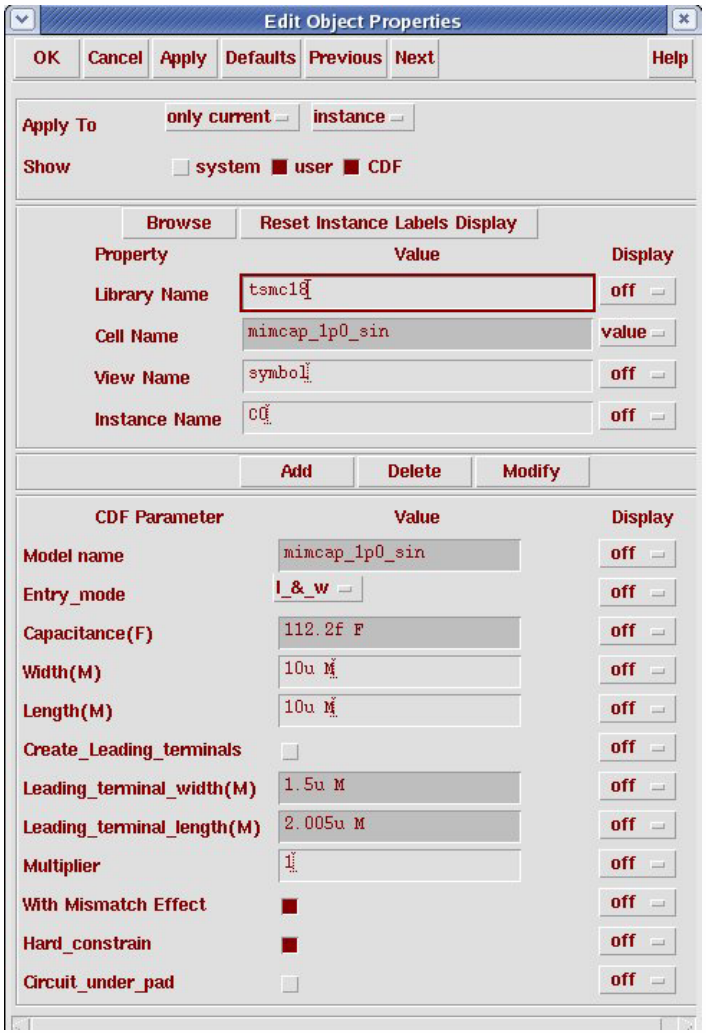

◆**Model name:** Display model name information.
(This parameter can't be modify in CDF form)

◆**Entry_method:** (***l_&_W***, ***_c_*** , ***c_&_W***) capacitor update method.
Check here for more information

◆**Capacitance:** Capacitance information.
(This parameter can't be modify in CDF form)

◆**Width_(M):** Input capacitor metal width.

◆**Length_(M):** Input capacitor metal length.

◆**Create_Leading_terminals:** A option to create leading terminals.

◆**Leading_terminals_Width(M):** This parameter can be modify in layout CDF form, use can modify the terminal width.

◆**Leading_terminals_length(M):** This parameter can be modify in layout CDF form, use can modify the terminal length.
Check here for more information

◆**Multiplier:** Numbers of parallel Capacitor device.
Check here for more information

◆**With Mismatch Effect:** Option for run mismatch effect

◆**Hard_constrain:** This function provides an option to constrain the value for each parameter in this device.

◆**Circuit_under_pad:** By adding dummy layer on mimcap, LVS can recognize the device below this mimcap if this switch is turned on

TSMC Confidential Information 556786 PGC PROGATE GROUP CORPORATION 07/15/20

Back to Device Table

Empowering Innovation

TSMC018 PDK Usage Guide

Confidential
Security C

Varactor Parameterized Cell Function Introduction:

- The **schematic** component description format (CDF) parameter in varactor are list as below:

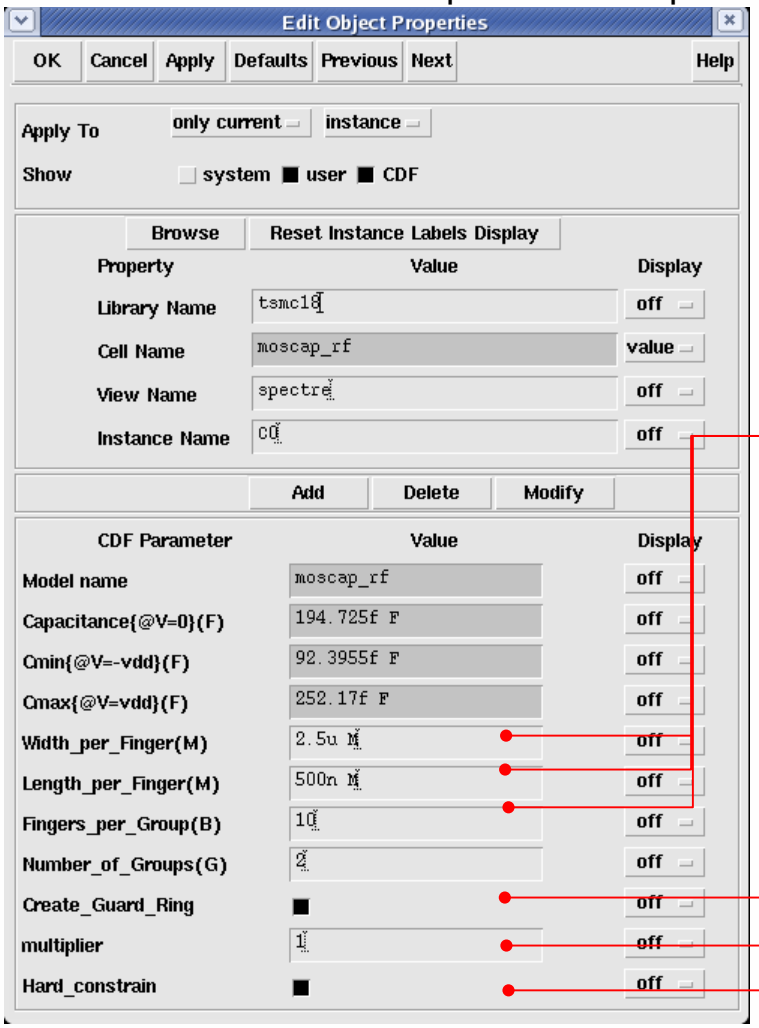

- **Model name:** Display model name information.
- **Capacitance(@V=0)(F):** Display the capacitance value in 0V.
- **Cmin(@V=-vdd)(F):** Display the capacitance value in –vdd
- **Cmax(@V=vdd)(F):** Display the capacitance value in vdd

(These parameter can't be modify in CDF form)

- **Length_per_Finger(M):** Device width.
- **Width _per_Finger(M):** Device length.
- **Fingers_ per_Group(B):** Device finger numbers.
- **Numbers_ per_Group(G):** Device group numbers.

Check here for more information

- **Create_Guard_Ring:** A option to create guardring.

- **Total area:** Device total area.
- **Total perl:** Device total perl.

(These parameter can't be modify in CDF form)

- **Multiplier:** Numbers of parallel Varactor device.

Check here for more information

- **Hard_constrain:** This function provides an option to constrain the value for each parameter in this device.

TSMC Confidential Information 556786 PGC PROGATE GROUP CORPORATION 07/15/2013

Back to Device Table

Empowering Innovation

TSMC018 PDK Usage Guide

Confidential
Security C

Pad Parameterized Cell Function Introduction:

- The **schematic** component description format (CDF) parameter in pad_device are list as below:

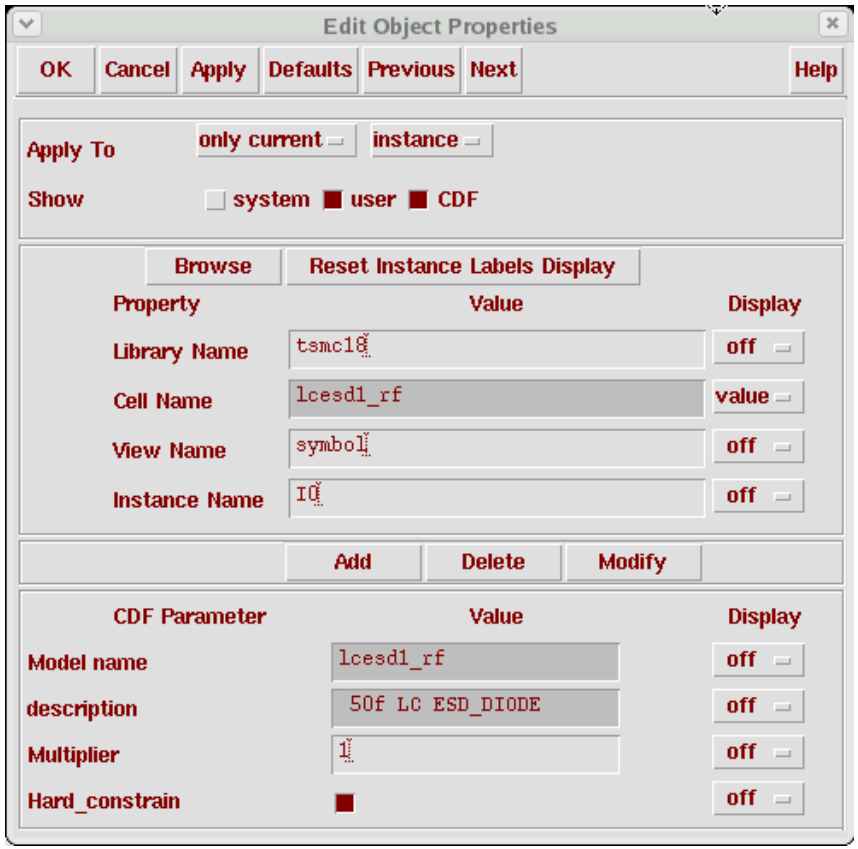

◆**Model name:** Display model name information.

◆**Description:** Display device description.

(These parameter can't be modify in CDF form)

◆**Multiplier:** Numbers of parallel Varactor device.

Check here for more information

◆**Hard_constrain:** This function provides an option to constrain the value for each parameter in this device.

TSMC Confidential Information 556786 PGC PROGATE GROUP CORPORATION 07/15/2013

Back to Device Table

Empowering Innovation

TSMC018 PDK Usage Guide

Confidential
Security C

Inductor Parameterized Cell Function Introduction:

- The **schematic** component description format (CDF) parameter in Inductor are list as below:

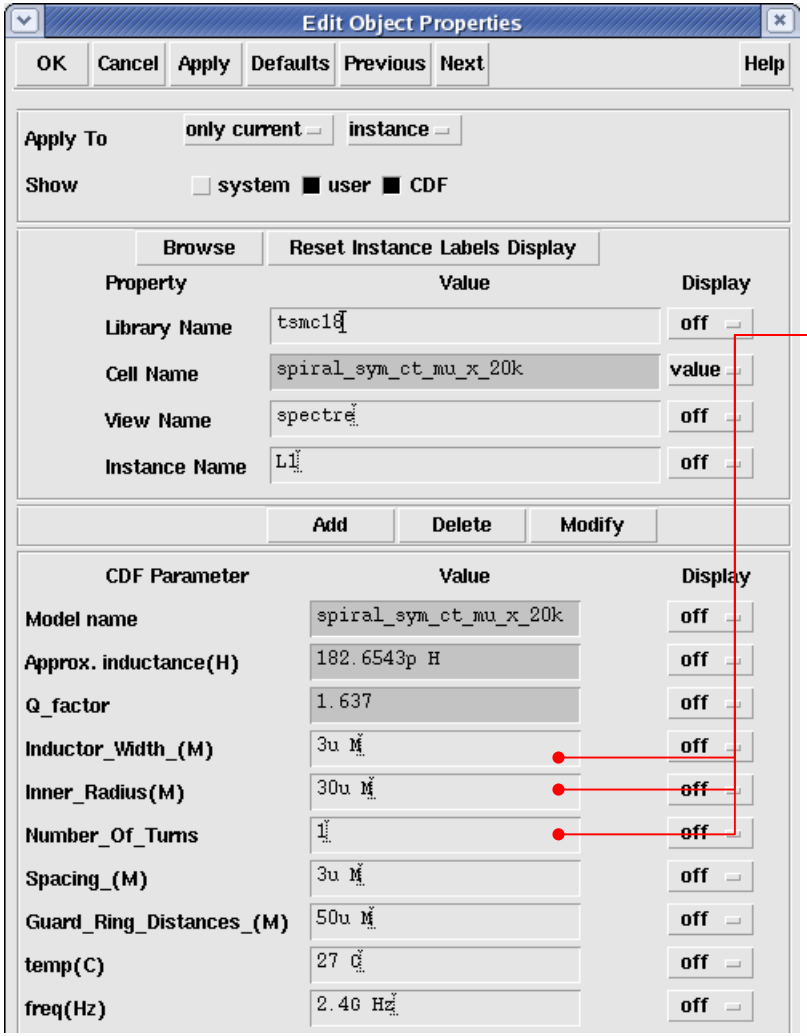

- **Model name:** Display model name information.
- **Approx inductance(H):** Display Approx inductance device description

(These parameter can't be modify in CDF form)

- **Inductor_Width(M):** Inductor Metal line width.
- **Inner Radius(M):** Cycle Inductor radius.
- **Number_Of_Turns:** The turns number of the cycle inductor.
- **Spacing_(M):** Display inductor space.
- **Guard_Ring_Distances_(M):** Guard ring distance
- **temp(C):** Define working temperature
- **freq(Hz):** Define working frequency

TSMC Confidential Information 556786 PGC PROGATE GROUP CORPORATION 07/15/2013

Back to Device Table

Empowering Innovation

Confidential
Security C

Inductor Parameterized Cell Function Introduction:

- The **schematic** component description format (CDF) parameter in Inductor are list as below:

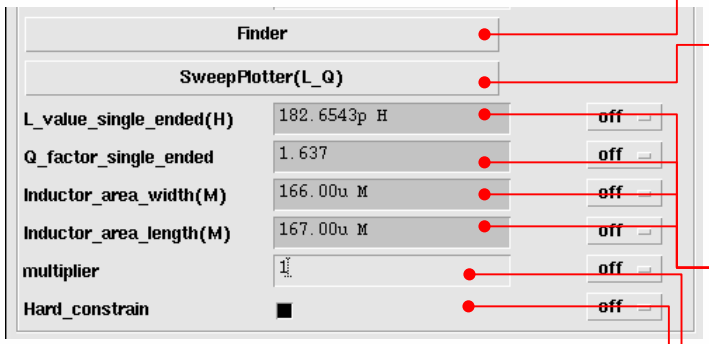

- **Finder:** tsmc inductor finder
- **SweepPlotter(L_Q):** tsmc inductor sweep plotter
- **L_value_single_ended(H) :** Display inductance
- **Q_factor_single_ended:** Display Q factor
- **Inductor_area_width(M):** Display inductor width.
- **Inductor_area_length(M):** Display inductor length.

(These parameter can't be modify in CDF form)

- **Multiplier:** Numbers of parallel Inductor device.

Check here for more information

- **Hard_constrain:** This function provides an option to constrain the value for each parameter in this device.

TSMC Confidential Information 556786 PGC PROGATE GROUP CORPORATION 07/15/2003

Back to Device Table

Empowering Innovation

Confidential
Security C

LogicGate Parameterized Cell Function Introduction:

- The **schematic** component description format (CDF) parameters in inverter are list as below:

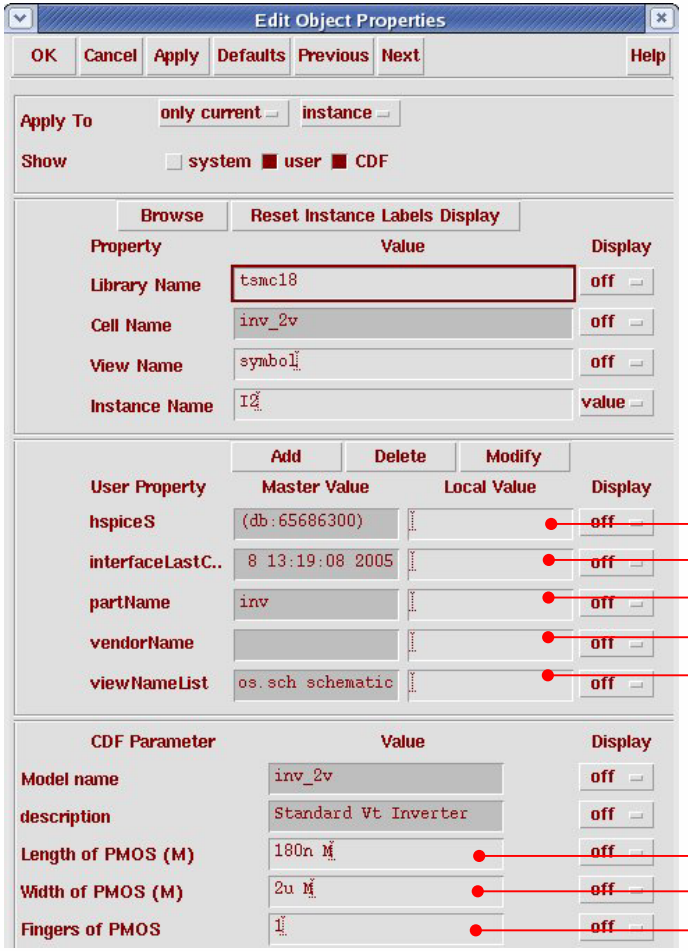

- **HspiceS:** Display model name information.
- **InterfaceLastC..:** Display device description.
- **partName:** Display device description.
- **vendorName:** Display device description.
- **viewNameList:** Display device description.

(Cell information)

- **Model name:** Display model name information.
- **Description:** Display device description.

(These parameter can't be modify in CDF form)

- **Length of PMOS(M):** All pmos length.
- **Width of PMOS(M):** All pmos width.
- **Fingers of PMOS(M):** All pmos fingsers.

TSMC Confidential Information 556786 PGC PROGATE GROUP CORPORATION 07/15/2003

Back to Device Table

Empowering Innovation

TSMC018 PDK Usage Guide

LogicGate Parameterized Cell Function Introduction:

- The **schematic** component description format (CDF) parameters in inverter are list as below:

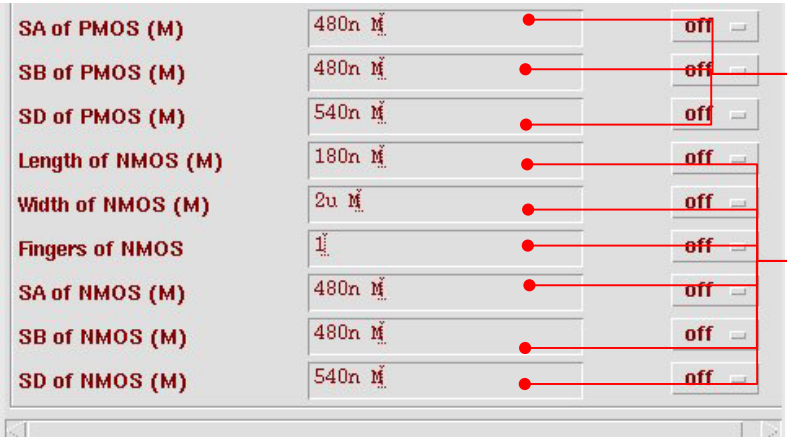

- **SA of PMOS(M):** All pmos SA.
- **SB of PMOS(M):** All pmos SB. .
- **SD of PMOS(M):** All pmos SD.

- **Length of NMOS(M):** All nmos length.
- **Width of NMOS(M):** All nmos width.
- **Fingers of NMOS(M):** All nmos fingsers.
- **SA of NMOS(M):** All nmos SA.
- **SB of NMOS(M):** All nmos SB. .
- **SD of NMOS(M):** All nmos SD.

TSMC Confidential Information 556786 PGC PROGATE GROUP CORPORATION 07/15/2013

Back to Device Table

CDF Parameter Description

TSMC Confidential Information 556786 PGC PROGATE GROUP CORPORATION 07/15/2013

Empowering Innovation SM

TSMC018 PDK Usage Guide

Confidential
Security C

- **The function of Number of Fingers_(N)**
  - This parameter provide user to increment the poly finger numbers.

Number of Fingers_(N)=1

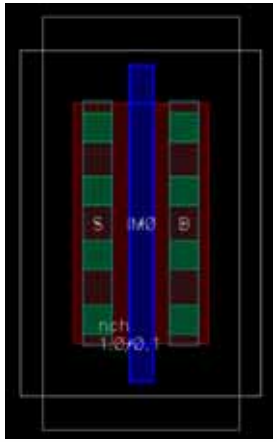

Number of Fingers_(N) =3

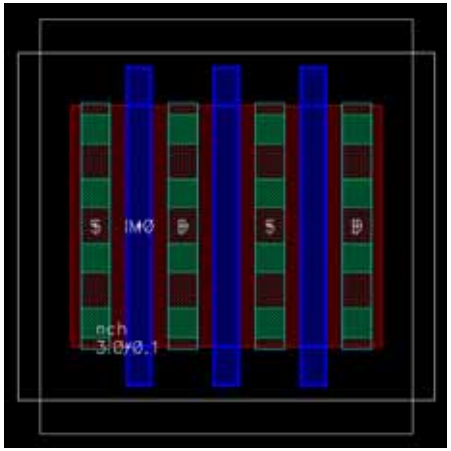

Number of Fingers_(N)=8

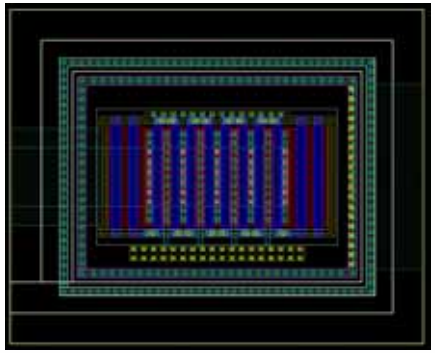

Number of Fingers_(N) =12

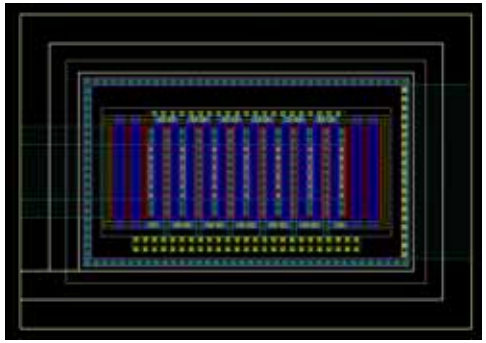

Check here to back to MOS

TSMC Confidential Information 556786 PGC PROGATE GROUP CORPORATION 07/15/2013

Empowering Innovation SM

TSMC018 PDK Usage Guide

Confidential
Security C

- **The function of Multiplier**
  - This parameter provide user to increment the parallel device.

Multiplier = 1

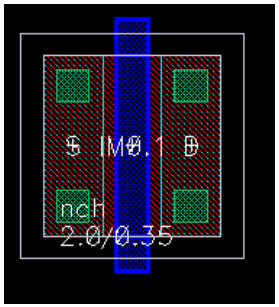

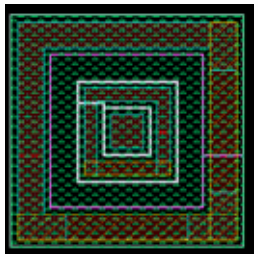

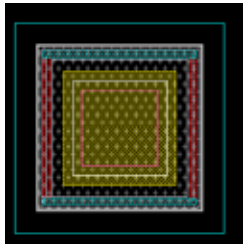

Multiplier = 2

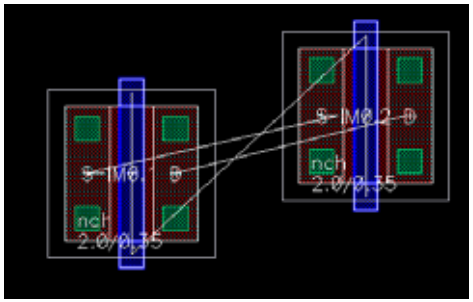

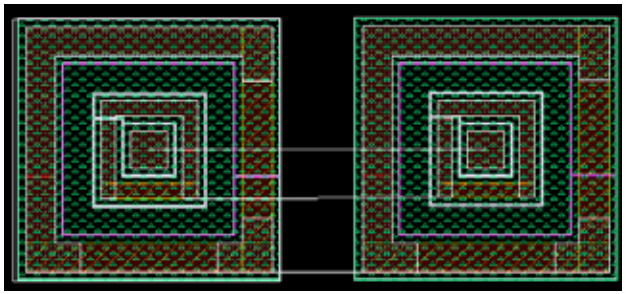

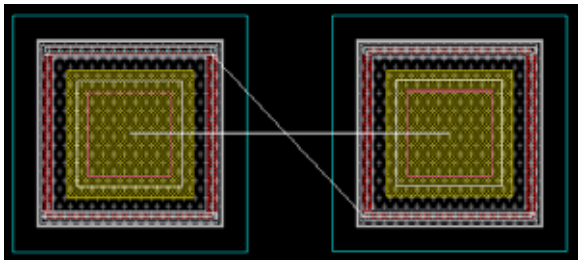

Check here to back to MOS
Check here to back to BJT
Check here to back to Diode
Check here to back to Resistance(1)
Check here to back to Resistance(2)
Check here to back to Varactor

TSMC Confidential Information 556786 PGC PROGATE GROUP CORPORATION 07/15/2013

Empowering Innovation SM

TSMC018 PDK Usage Guide

Confidential
Security C

- **The function of Calc Diff Params and Calc SA SB SD**
  - It's a switch for input simulation parameter that include area of source (AS), area of drain (AD), periphery of source (PS), periphery of drain (PD), number of squares source resistance (NRS), number of squares drain resistance (NRD) and LOD effect parameter- SA , SB and SD. Modify those parameters only influence simulation conditions, the design layout will not have any different.

Calc Diff Params is enable

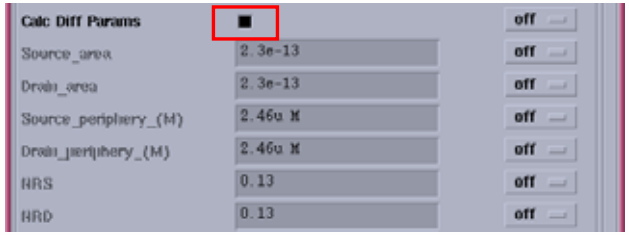

Parameters can't be modify

Calc Diff Params is disable

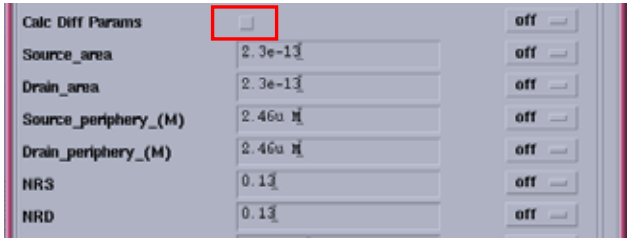

Parameters can be modify

Check here to back to MOS

TSMC Confidential Information 556786 PGC PROGATE GROUP CORPORATION 07/15/2013

Empowering Innovation SM

TSMC018 PDK Usage Guide

Confidential
Security C

- **The function of leftCnt, RightCnt**
  - The function provide a option for drawing poly-left (right) diffusion area metal1 connect

leftCnt is enable

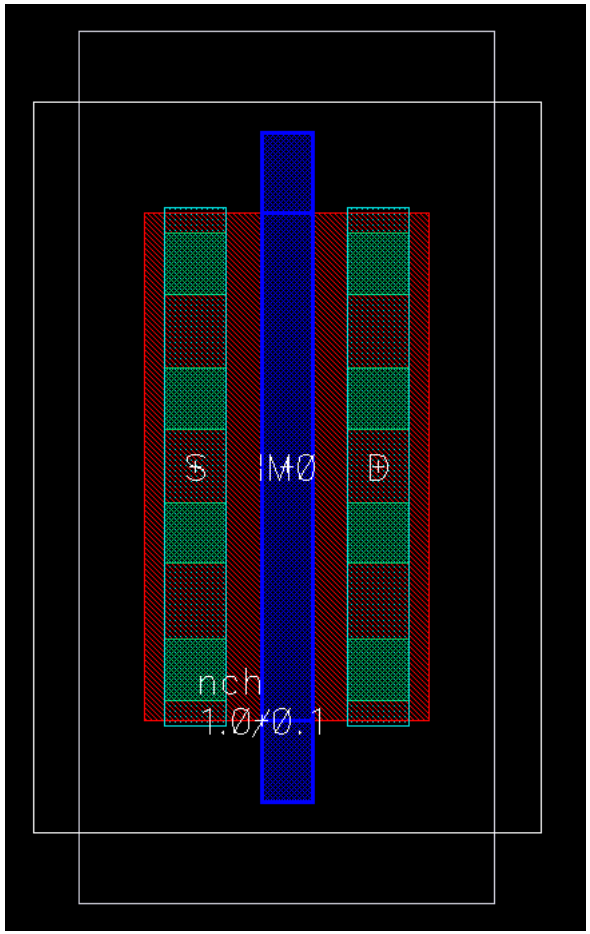

leftCnt is Disable

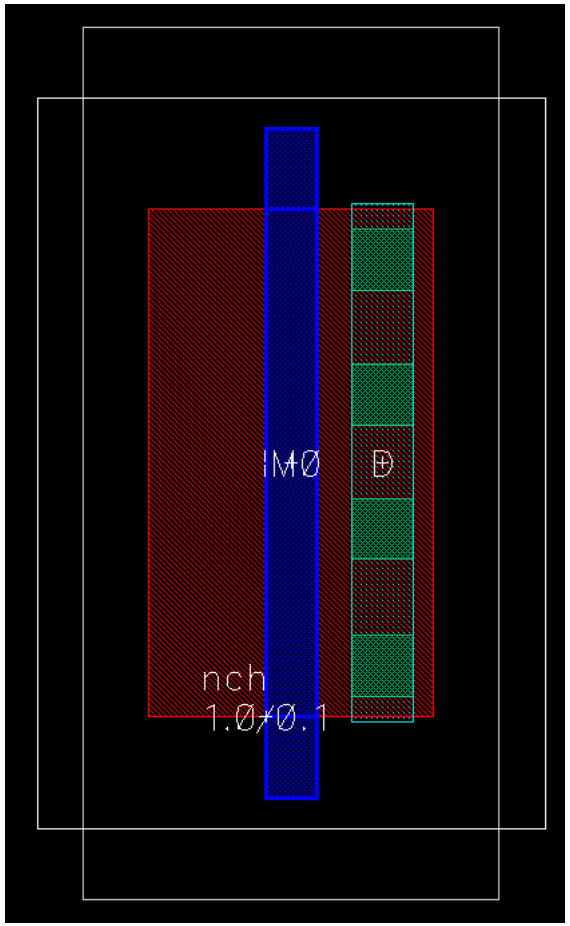

Check here to back to MOS

TSMC Confidential Information 556786 PGC PROGATE GROUP CORPORATION 07/15/2013

Empowering Innovation SM

TSMC018 PDK Usage Guide

Confidential
Security C

- **The function of bodytie_typeL and bodytie_typeR**
  - The function provide a option for drawing body connection at the device left (bodytie_typeL) or device right (bodytie_typeR).

bodytie_typeL is *None*

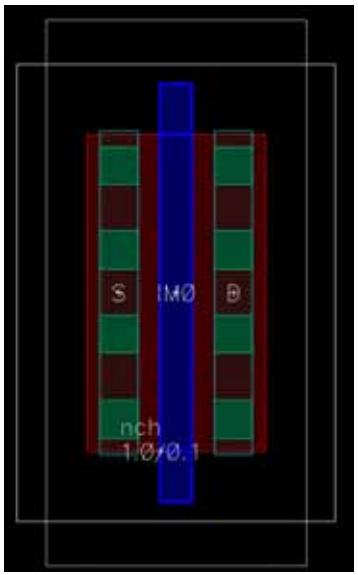

bodytie_typeL is *Integred*

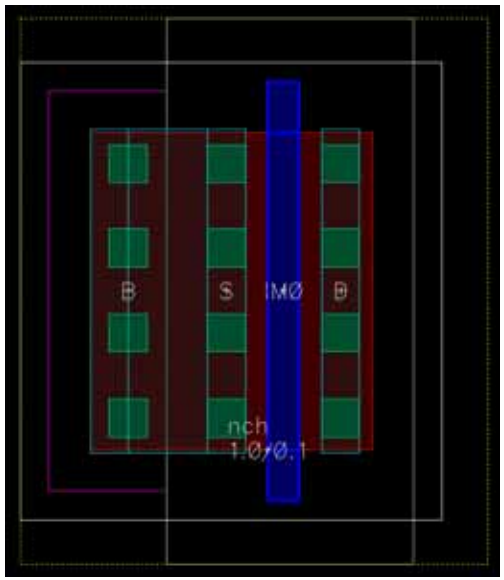

bodytie_typeL is *Detached*

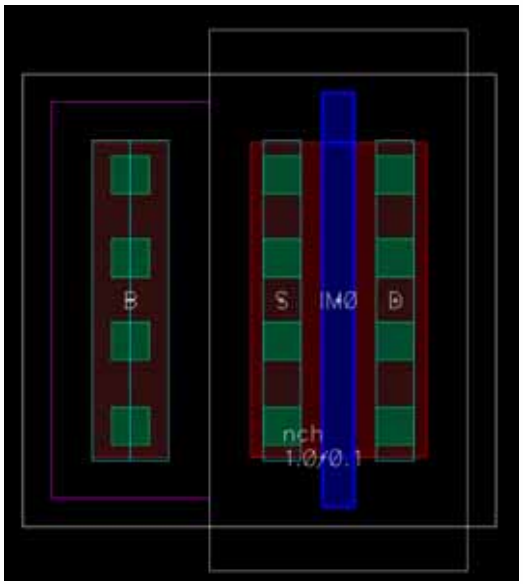

Check here to back to MOS

TSMC Confidential Information 556786 PGC PROGATE GROUP CORPORATION 07/15/2013

Empowering Innovation SM

Confidential
Security C

The function of routePolydir

- The function is provided to drawing poly gate connection. The space of poly gate connection to the diffusion area can be modify by routeUPoly_SP_INC(M) and routeDPoly_SP_INC(M) [2].

The **poly Contacts** will appear when **routPolydir** doesn't None. It is an option to draw contact on the poly gate.

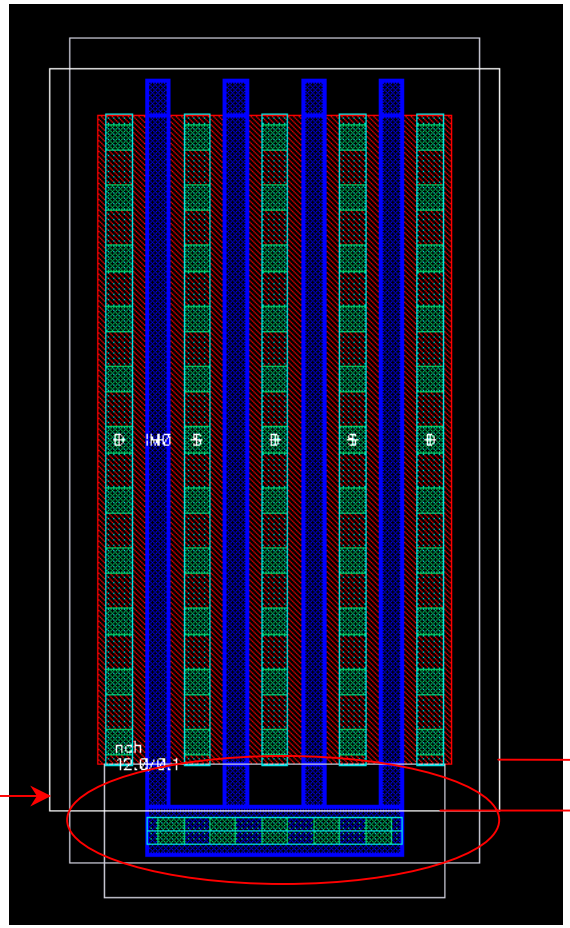

PO.S.6(design rule)
+ routeDPoly_SP_INC

Check here to back to MOS

[2] The routeUPoly_SP_INC(M) and routeDPoly_SP_INC(M) only appear when routePolydir doesn't ***None.***

TSMC Confidential Information 556786 PGC PROGATE GROUP CORPORATION 07/15/2013

Empowering Innovation SM

TSMC018 PDK Usage Guide

Confidential
Security C

- **The function of routePolydir**
  - The function is suggest to use in multi-finger. If customer use only one finger and turn on the routePolydir none/top/bottom/both direction. It will shows the following layout.

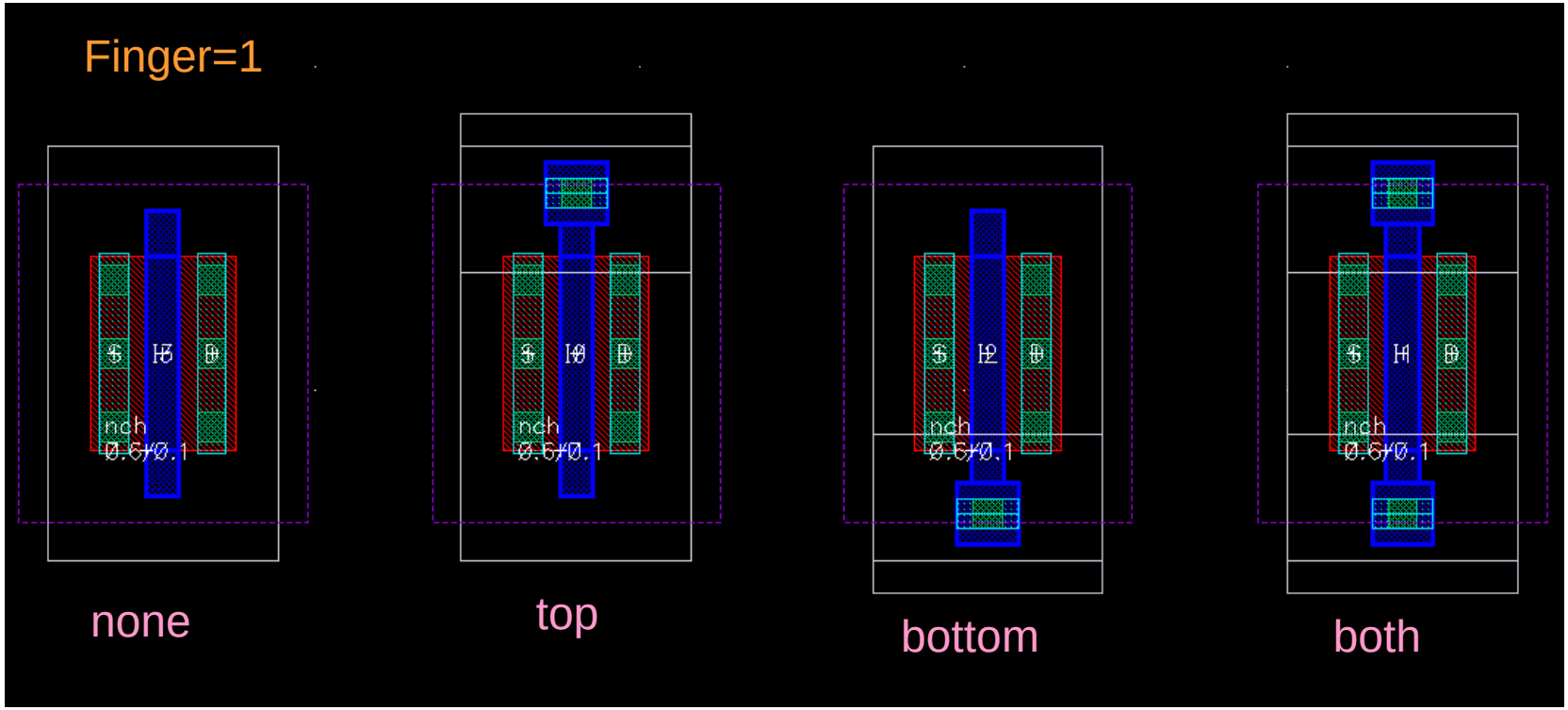

TSMC Confidential Information 556786 PGC PROGATE GROUP CORPORATION 07/15/2013

Empowering Innovation SM

TSMC018 PDK Usage Guide

Confidential
Security C

- **The function of routePolydir**
  - Finger number=3. If customer use finger number=3 and turn on the routePolydir none/top/bottom/both direction. It will shows the following layout.

Finger=3

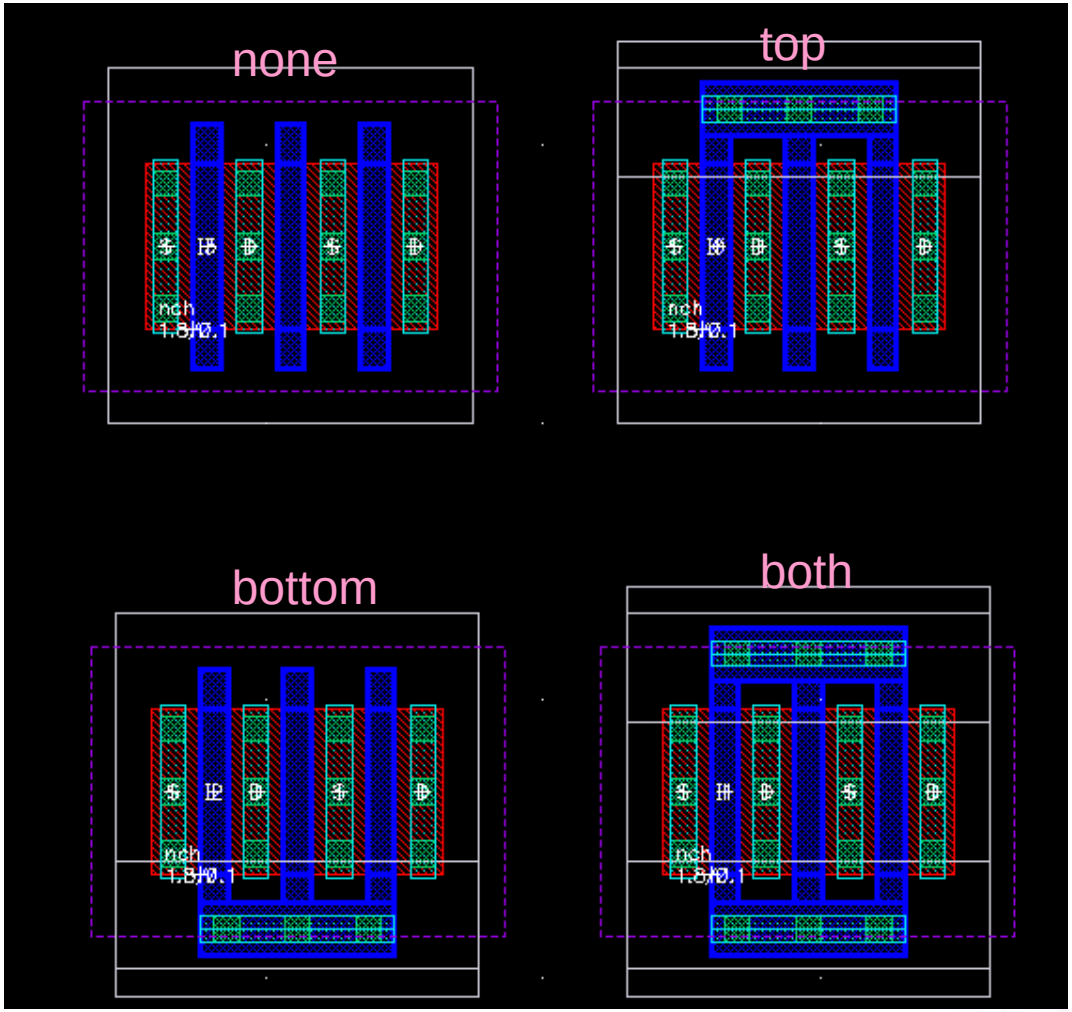

TSMC Confidential Information 556786 PGC PROGATE GROUP CORPORATION 07/15/2013

Empowering Innovation SM

TSMC018 PDK Usage Guide

Confidential
Security C

- **The function of routePolydir**
  - Finger number=3. Customer use finger number=3 and turn on the routePolydir none/top/bottom/both direction. At the same time customer uses Poshrink option as following : Finger=3

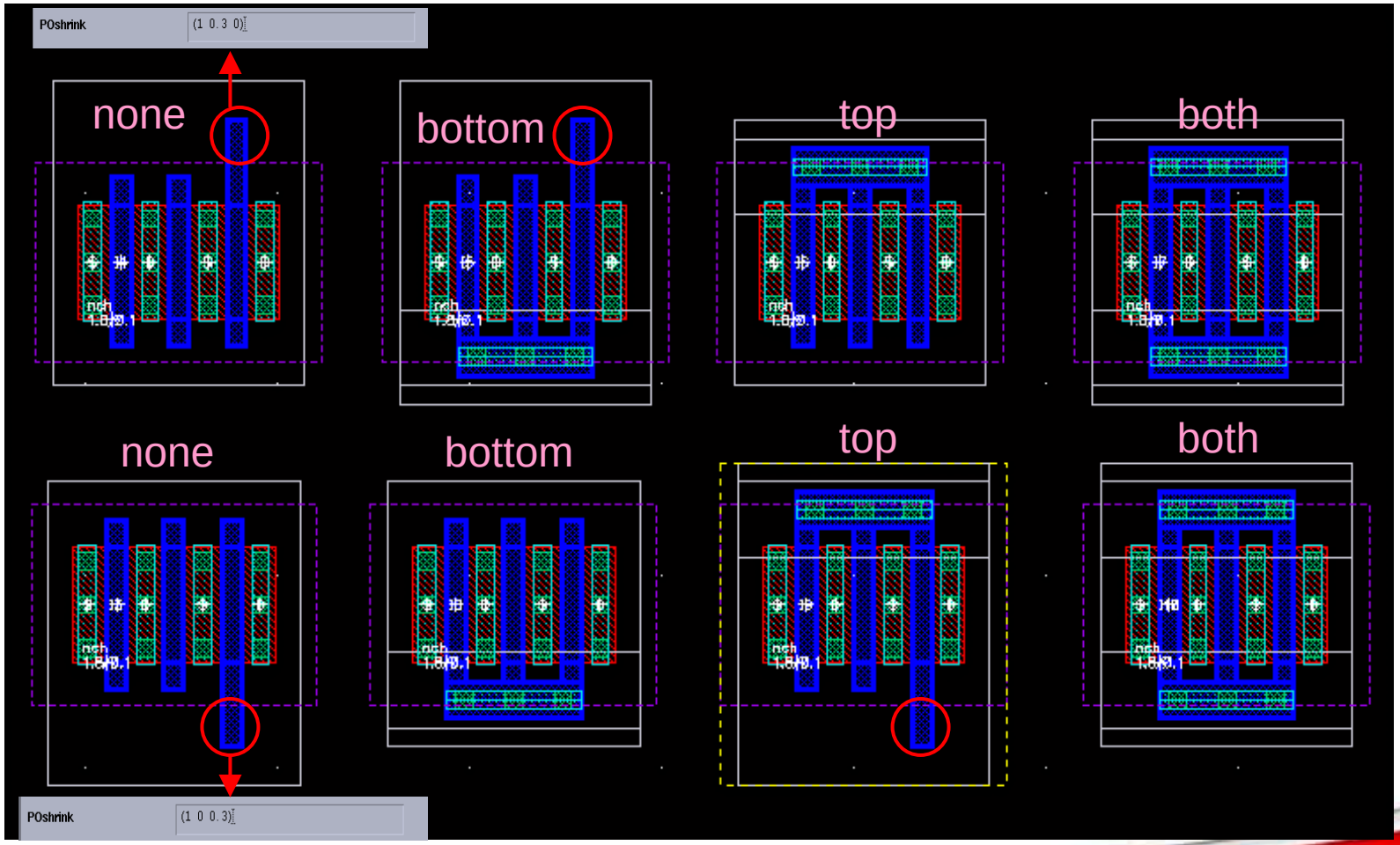

TSMC Confidential Information 556786 PGC PROGATE GROUP CORPORATION 07/15/2013

Empowering Innovation SM

TSMC018 PDK Usage Guide

Confidential
Security C

- **The function of EmitterSize**
  - There are three dimension of pnp and npn are provided in this PDK, user can use this function to choose those device layout.

EmitterSize = 5X5 **EmitterSize = 10X10**

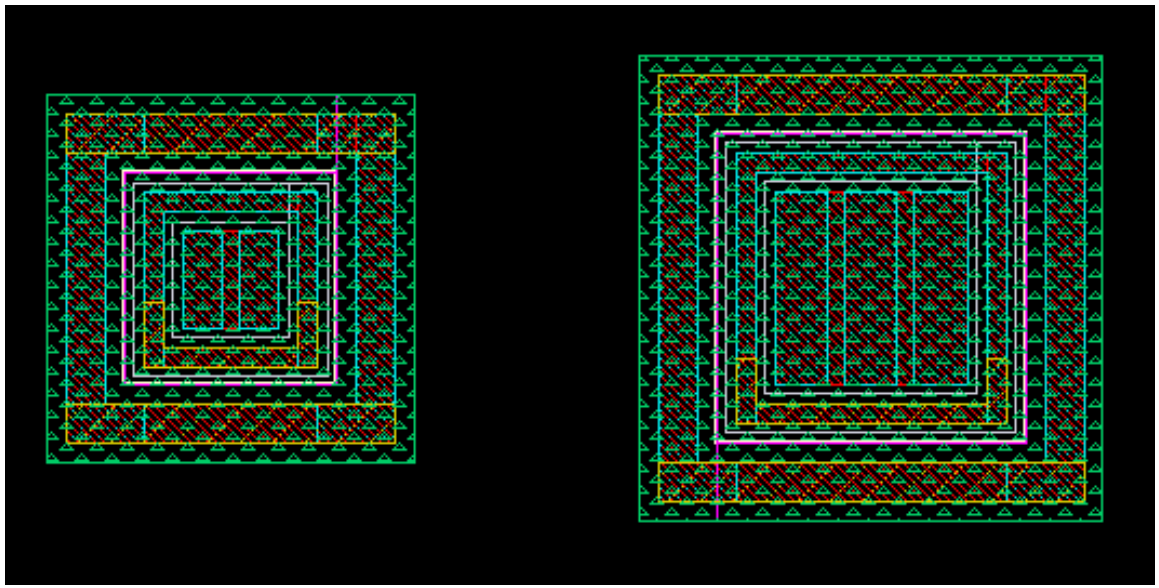

Check here to back to BJT

TSMC Confidential Information 556786 PGC PROGATE GROUP CORPORATION 07/15/2013

Empowering Innovation SM

TSMC018 PDK Usage Guide

Confidential
Security C

- **The function of Total resistance(ohms), Width(M), Length(M) and Res_update_method**
  - In the resistance cell, we provide user two kinds of input method – ***l_&_W*** and ***Rec_&_W*** to modify the device resistance. When the user select ***l_&_W*** method, the input parameter will be length(M) and width(M), the other one is total resistance(ohms) and width(M).

select ***l_&_W*** method

CDF Parameter	Value	Display
Model name	rm1	off
Total resistance(ohms)	89.7m Ohms	off
LVS Resistance(ohms)	78.000m Ohms	off
Width(M)	230.0n M	off
Length(M)	230.0n M	off
Multiplier	1	off
Rsh(ohms/square)	0.078	off
Res_update_method	Res_&_w	off
Hard_constrain	■	off

CDF Parameter	Value	Display
Model name	rm1	off
Total resistance(ohms)	89.7m Ohms	off
LVS Resistance(ohms)	78m Ohms	off
Width(M)	230n M	off
Length(M)	230n M	off
Multiplier	1	off
Rsh(ohms/square)	78m	off
Res_update_method	l_&_w	off
Hard_constrain	■	off

select ***Rec_&_W*** method

Check here to back to Resistance(1)
Check here to back to Resistance(2)

TSMC Confidential Information 556786 PGC PROGATE GROUP CORPORATION 6/11/2013

Empowering Innovation SM

TSMC018 PDK Usage Guide

Confidential
Security C

- **The function of Resistor connection, Number of segment, Segment spacing(M)**
  - Number of segment provide user a function to Increment the number of segment resistance, user can use Resistor connection and Segment spacing(M) to modify connection type – ***series*** or ***parallel*** and segment spacing.

Number of segment = **2**
Resistor connection = ***series***
Segment Spacing(M) = **2.4u**

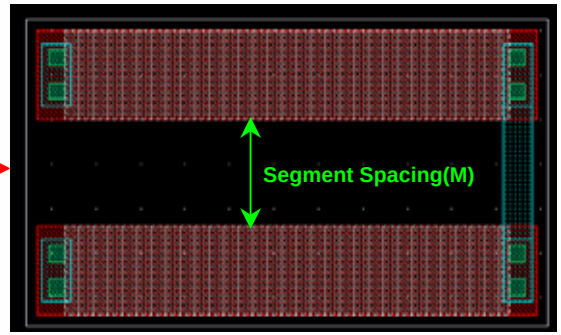

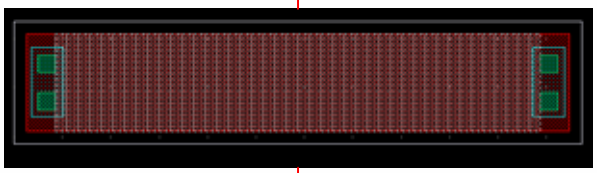

Number of segment = **2**
Resistor connection = ***parallel***
Segment Spacing(M) = **4.8u**

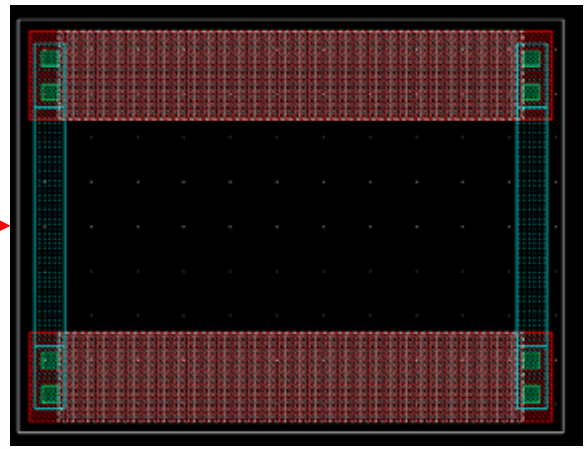

Check here to back to Resistance(2)

TSMC Confidential Information 556786 PGC PROGATE GROUP CORPORATION 6/15/2013

Empowering Innovation SM

TSMC018 PDK Usage Guide

Confidential
Security C

- **The function of Cont columns**
  - This function provide user to modify the contact columns.

Cont columns= 1

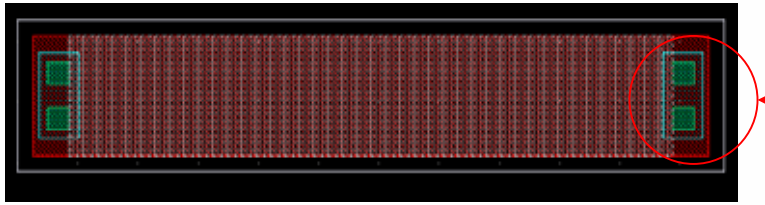

Cont columns= 3

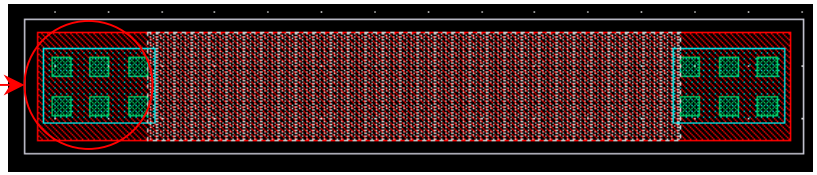

Check here to back to Resistance(2)

TSMC Confidential Information 556786 PGC PROGATE GROUP CORPORATION 6/15/2013

Empowering Innovation SM

TSMC018 PDK Usage Guide

- **The function of Entry_method, Length_(M) and Width_(M).**
  - In the capacitor cell, we provide user three kinds of input method – ***l_&_W, _c_*** and ***c_&_W*** to modify the device capacitance.

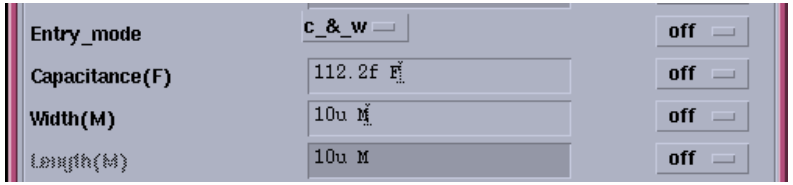

select ***l_&_w*** method

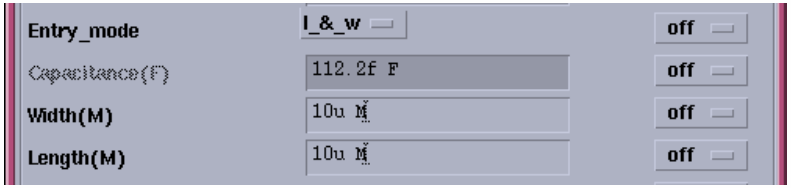

select ***c_&_w*** method

select ***_c_*** method

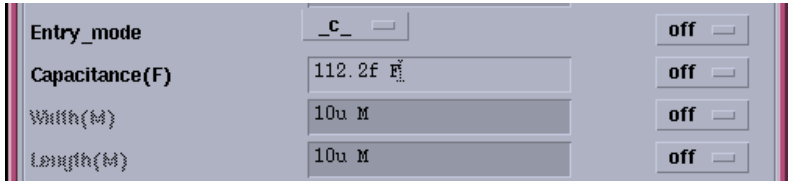

Check here to back to Capacitor

TSMC Confidential Information 556786 PGC PROGATE GROUP CORPORATION 07/15/2013

Empowering Innovation SM

TSMC018 PDK Usage Guide

Confidential
Security C

- **The function of Create_Leading_terminals.**
  - In the capacitor cell, we provide user a option to create leading terminals.

Create_Leading_terminals= Disable

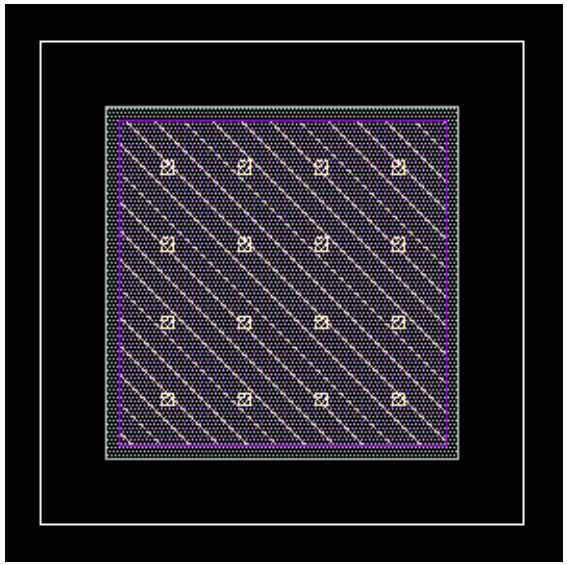

Create_Leading_terminals= Enable

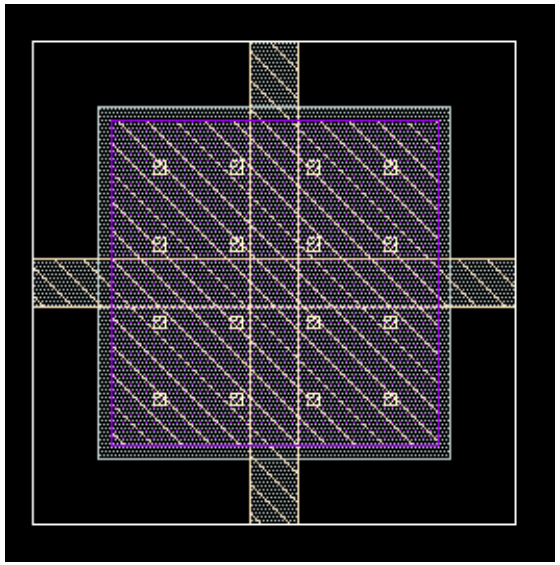

Check here to back to Capacitor

TSMC Confidential Information 556786 PGC PROGATE GROUP CORPORATION 07/15/2013

Empowering Innovation SM

TSMC018 PDK Usage Guide

Confidential
Security C

- **The function of CRTMOM**

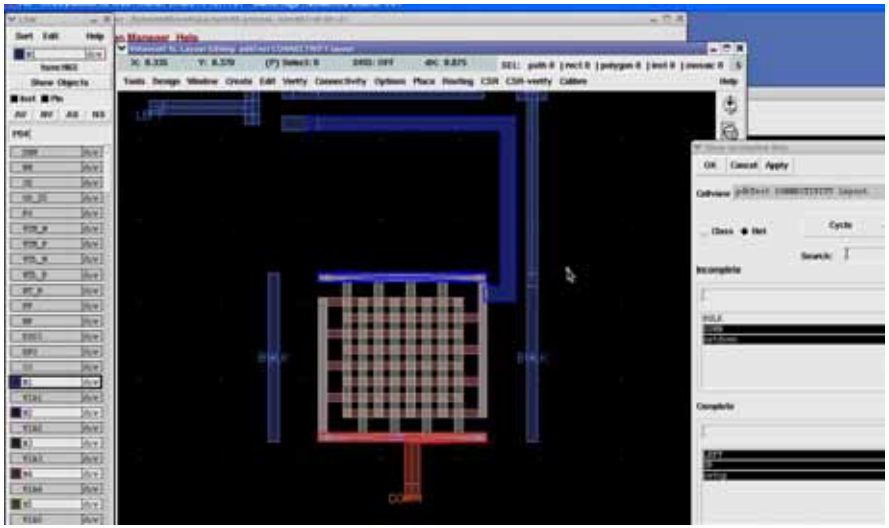

1. No problem to add different metal layer connection flexibility.
2. Allow right&left side for connection but need to consider improper metal routing caused additional parasitic capacitances.

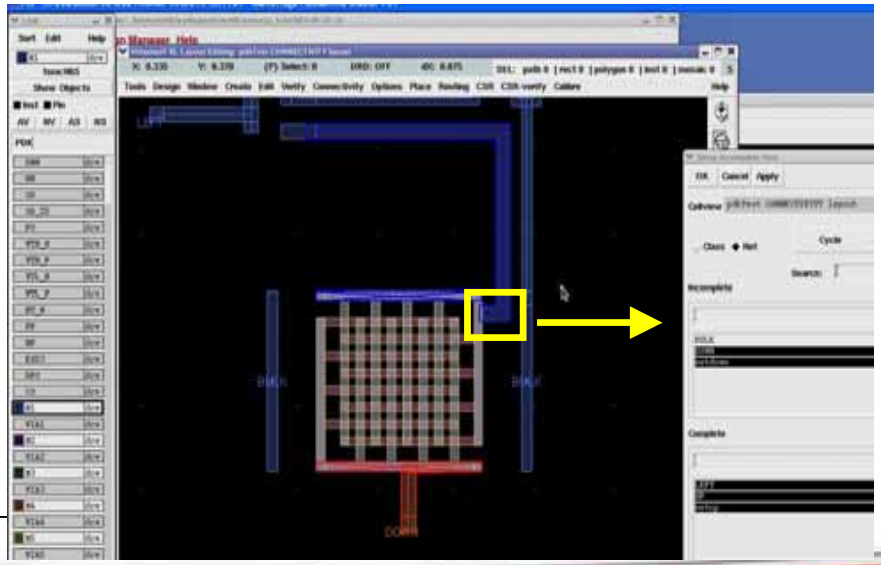

Extra Parasitic devices will be extracted in yellow mark region. Need to consider very careful.

TSMC don't recommend this kind connection.

TSMC Confidential Information 556786 PGC PROGATE GROUP CORPORATION 07/15/2013

TSMC018 PDK Usage Guide

Confidential
Security C

- **The function of PMOSCAP_RF**
  - This function provide user to modify the device layout

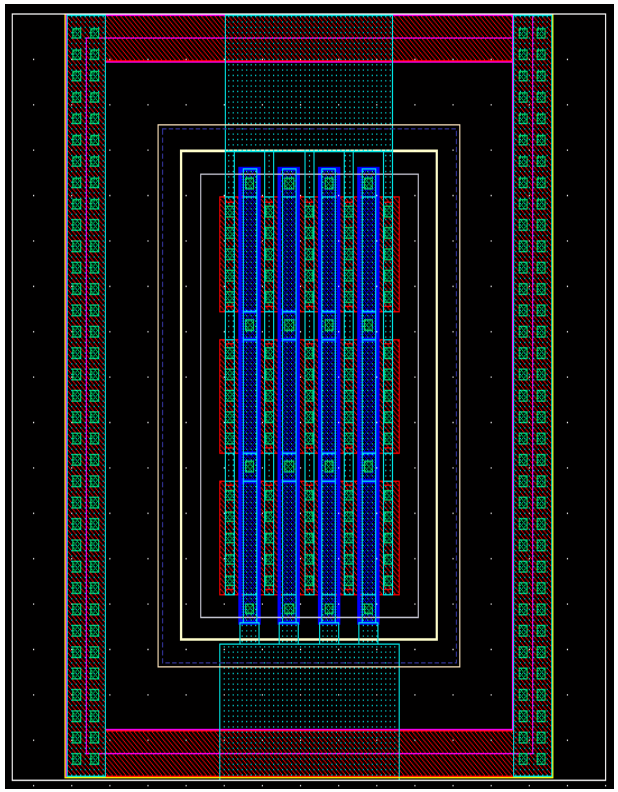

CDF Parameter	Value	Display
Model name	moscap_rf	off
Capacitance{@V=0}(F)	116.835f F	off
Cmin{@V=-vdd}(F)	55.4373f F	off
Cmax{@V=vdd}(F)	151.302f F	off
Width_per_Finger(M)	2.5u M	off
Length_per_Finger(M)	500n M	off
Fingers_per_Group(B)	4	off
Number_of_Groups(G)	3	off
Create_Guard_Ring	■	off
multiplier	1	off
Hard_constrain	■	off

Width

Length

Finger of group

Group number

Check here to back to Varactor

TSMC Confidential Information 556786 PGC PROGATE GROUP CORPORATION 07/15/2013

Empowering Innovation SM

Appendix

TSMC Confidential Information 556786 PGC PROGATE GROUP CORPORATION 07/15/2013

Empowering Innovation SM

Confidential
Security C

Appendix A – Stretch Handles

- This function lets user graphically change the value of those parameter for Pcell instances after user place them. The only one device MOS is a stretchable Pcell in this PDK.
- The system default is not show out the stretch handles, user must be enable the function manually. (Direct: in the layout view Options → Display option → Stretch Handles)

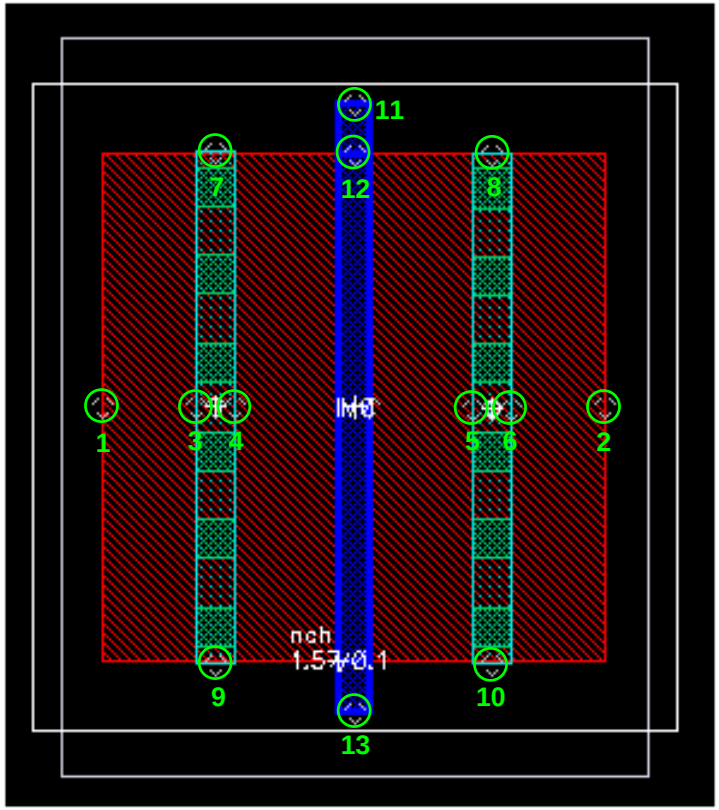

Stretch Handles number	Stretch direction
1	← →
2	← →
3, 5	←
4, 6	→
7, 8	↓
9, 10	↑
11	↑
13	↓
12	↑ ↓

TSMC Confidential Information 556786 PGC PROGATE GROUP CORPORATION 07/15/2013

Empowering Innovation SM

- A example to show out the stretch case when the user stretch the handle 12.

Width = 2.0u

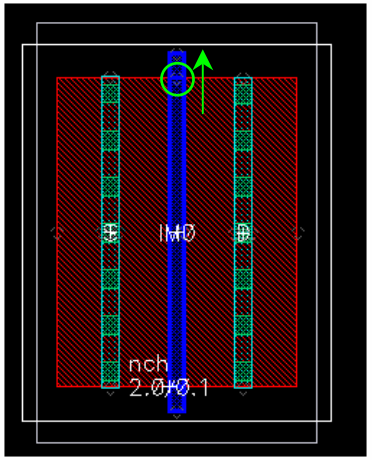

Select handle 11 and move up the handle.

Width = 2.0u →3.0u

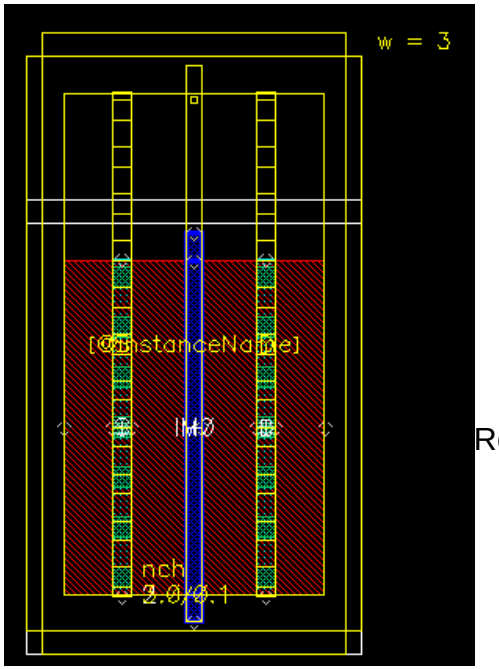

Release the handle

Width = 3.0u

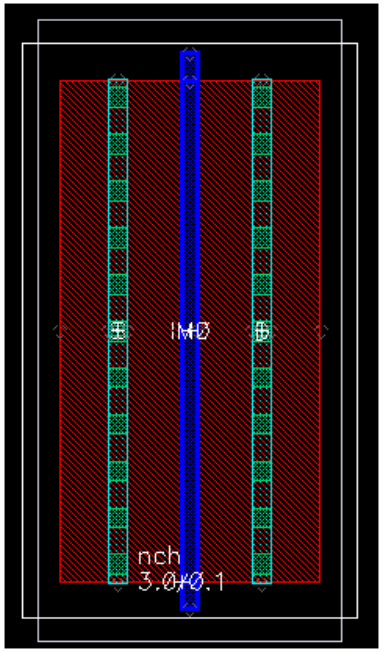

TSMC Confidential Information 556786 PGC PROGATE GROUP CORPORATION 07/15/2013

Empowering Innovation SM

Confidential
Security C

Appendix B – The three terminal MOS substrate pin

- In three terminal MOS, we create a parameter for substrate pin. The pin name is vss_sub in NMOS and vdd_sub in PMOS. When user instances the three terminal MOS, all of the devices substrate terminal will connect to vss_sub or vdd_sub. User doesn't need to draw the wire to link the device. In the hierarchy structure, user can add a parameter in CDF form to assign the substrate terminal name.

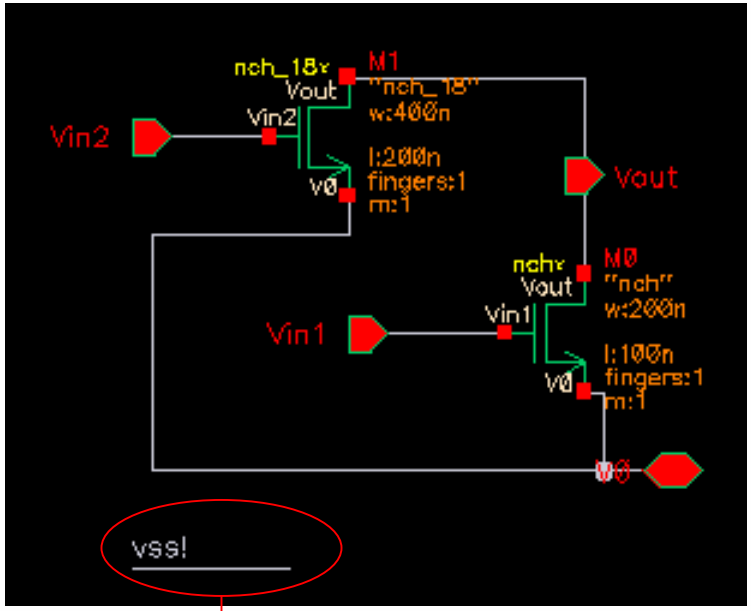

When user instances the nchx and nch_18x (three terminal MOS), all of the devices substrate terminal will connect to vss_sub (VSS!)

TSMC Confidential Information 556786 PGC PROGATE GROUP CORPORATION 07/15/2003

Empowering Innovation SM

- In the hierarchy structure, user can add a parameter in CDF form to assign the substrate terminal name.

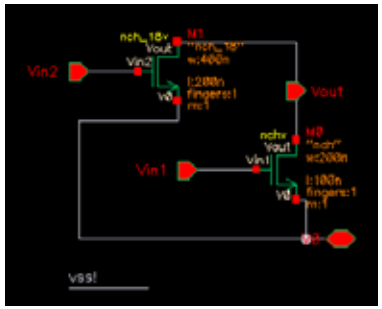

Create cellview to build up the symbol

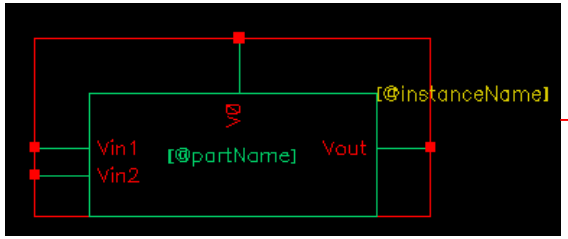

Instance the symbol to other schematic view and assign the vss_sub to V_sub

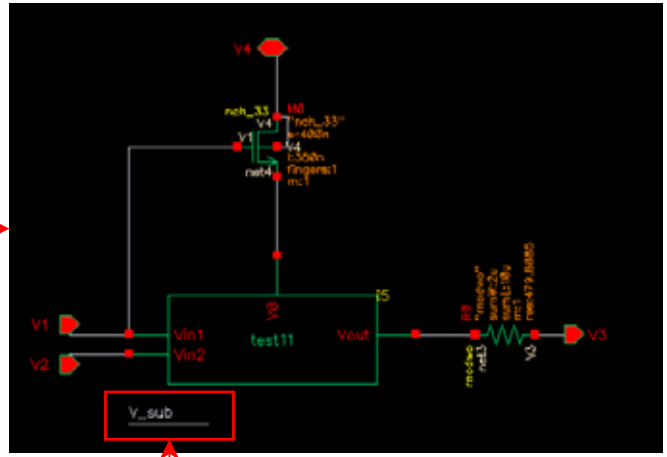

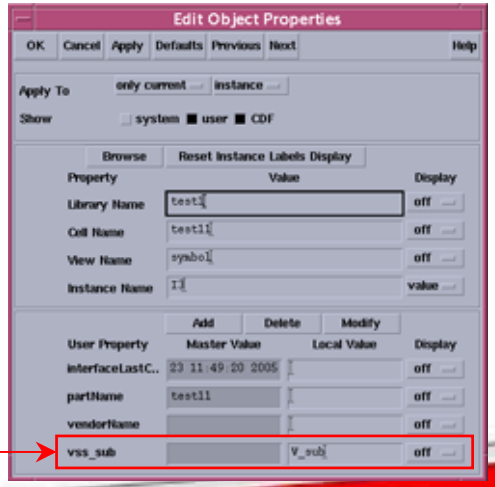

TSMC Confidential Information 556786 PGC PROGATE GROUP CORPORATION 07/15/2013

Confidential
Security C

- **Appendix C – AS AD PS PD NRS NRD methodology**
  - In this section, we will description that the PDK how to calculate as, ad, ps, pd, nrs and nrd.

Case I

- *Normal MOS with multi fingers*

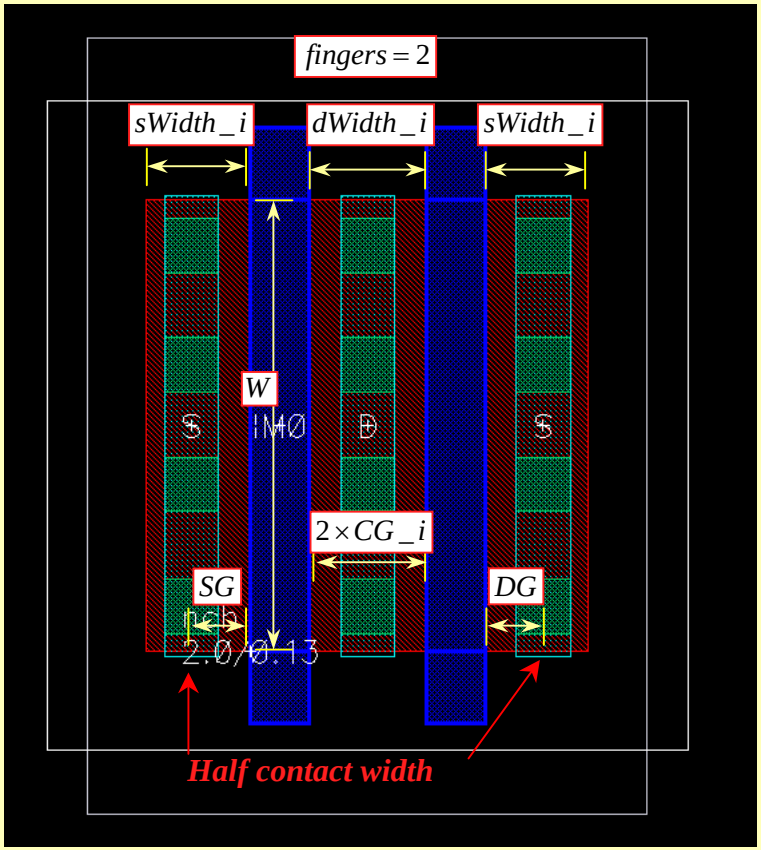

$$S_{Area_total} = \sum_{i=1} sWidth_i \times w \qquad AS = S_{Area_total} / fingers$$

$$S_{Peri_total} = \sum_{i=1} (sWidth_i + w \times N_s) \times 2 \qquad PS = S_{Peri_total} / fingers$$

$$D_{Area_total} = \sum_{i=1} dWidth_i \times w \qquad AD = D_{Area_total} / fingers$$

$$D_{Peri_total} = \sum_{i=1} (dWidth_i + w \times N_d) \times 2 \qquad PD = D_{Peri_total} / fingers$$

N_s : Number of Source $\qquad$ N_d : Number of Drain

$$NRS = (\sum_{i=1} CG_i_s + SG_s + DG_s) / fingers / w$$

$$NRD = (\sum_{i=1} CG_i_d + SG_d + DG_d) / fingers / w$$

CG_i_d : CG_i in Drain diffusion area

CG_i_s : CG_i in Source diffusion area

$SG_d(SG_s)$: SG in Drain(Source) diffusion area

$DG_d(DG_s)$: DG in Drain(Source) diffusion area

TSMC Confidential Information 556786 PGC PROGATE GROUP CORPORATION 07/15/2013

Empowering Innovation SM

Confidential
Security C

Case II

- *Dog Bone MOS with multi fingers*

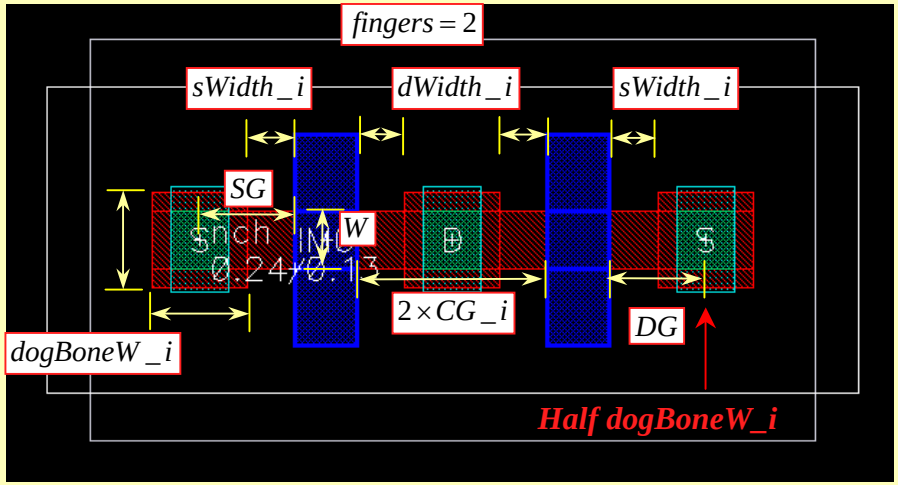

$$S_{Area_total} = \sum_{i=1} sWidth_i \times w + dogBoneW_i \times dogBoneW_i \times N_s$$

$$D_{Area_total} = \sum_{i=1} dWidth_i \times w + dogBoneW_i \times dogBoneW_i \times N_d$$

$$S_{Peri_total} = \sum_{i=1} sWidth_i \times 2 + dogBoneW_i \times 4 \times N_s$$

$$D_{Peri_total} = \sum_{i=1} dWidth_i \times 2 + dogBoneW_i \times 4 \times N_d$$

N_s : Number of Source $\quad$ N_d : Number of Drain

$$AS = S_{Area_total} / fingers$$

$$PS = S_{Peri_total} / fingers$$

$$AD = D_{Area_total} / fingers$$

$$PD = D_{Peri_total} / fingers$$

$$NRS = (\sum_{i=1} CG_i_s + SG_s + DG_s) / fingers / w$$

$$NRD = (\sum_{i=1} CG_i_d + SG_d + DG_d) / fingers / w$$

CG_i_d : CG_i in Drain diffusion area

CG_i_s : CG_i in Source diffusion area

$SG_d(SG_s)$: SG in Drain(Source) diffusion area

$DG_d(DG_s)$: DG in Drain(Source) diffusion area

TSMC Confidential Information 556786 PGC PROGATE GROUP CORPORATION 07/15/2013

Empowering Innovation SM

Confidential
Security C

Case III

- *Normal MOS with multi fingers after abut*

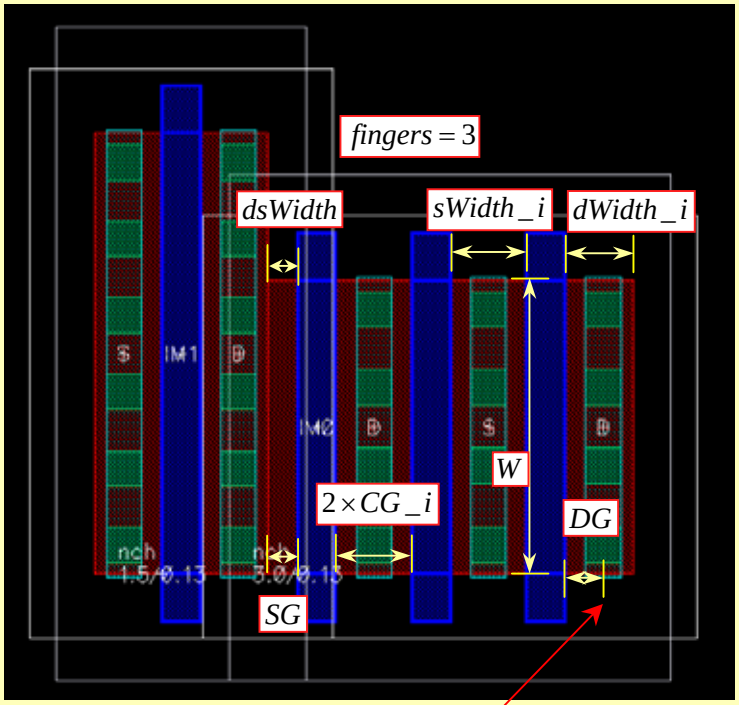

Half contact width

$$S_{Area_total} = (\sum_{i=1} sWidth_i + dsWidth) \times w$$

$$S_{Peri_total} = (\sum_{i=1} sWidth_i + dsWidth + w \times N_s) \times 2$$

$$D_{Area_total} = (\sum_{i=1} dWidth_i + ddWidth) \times w$$

$$D_{Peri_total} = (\sum_{i=1} dWidth_i + ddWidth + w \times N_d) \times 2$$

N_s : Number of Source $\quad$ N_d : Number of Drain

$AS = S_{Area_total} / fingers \quad PS = S_{Peri_total} / fingers$

$AD = D_{Area_total} / fingers \quad PD = D_{Peri_total} / fingers$

$$NRS = (\sum_{i=1} CG_i_s + SG_s + DG_s) / fingers / w$$

$$NRD = (\sum_{i=1} CG_i_d + SG_d + DG_d) / fingers / w$$

CG_i_d : CG_i in Drain diffusion area

CG_i_s : CG_i in Source diffusion area

$SG_d(SG_s)$: SG in Drain(Source) diffusion area

$DG_d(DG_s)$: DG in Drain(Source) diffusion area

TSMC Confidential Information 556786 PGC PROGATE GROUP CORPORATION 07/15/2013

Empowering Innovation SM

Confidential
Security C

Appendix D – SA SB SD methodology

- In this section, we will description that the PDK how to calculate sa and sb.

- For post-layout simulation (netlists extracted from the layout):
  Treat each finger of devices as an independent MOS. And thus PDK assigns different SA/SB to each independent MOS. So the netlist will look like (if finger_number=3):

m1 d g s b w=channel width l =channel length SA=SA1 SB=SB1
m2 d g s b w=channel width l =channel length SA=SA2 SB=SB2
m3 d g s b w=channel width l =channel length SA=SA3 SB=SB3

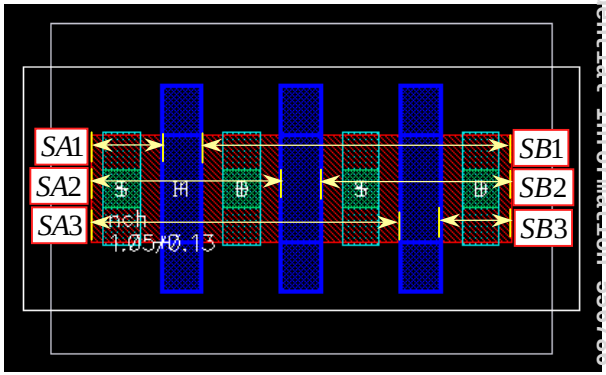

- For pre-layout simultation (netlists estimated from schematic diagram):
  PDK sets m=finger_number, SA=SA, SB=SB and SD=SD. So the netlist will look like
  m0 d g s b w=channel width l =channel length m=1 SA=SA SB=SB SD=SD
  Please refer next two page to understand the SA, SB and SD in layout

TSMC Confidential Information 556786 PGC PROGATE GROUP CORPORATION 07/15/2013

Empowering Innovation SM

TSMC018 PDK Usage Guide

Confidential
Security C

- In this page, we will description that the PDK how to calculate SA, SB and SD.

Case I

- ***Normal MOS with multi fingers***

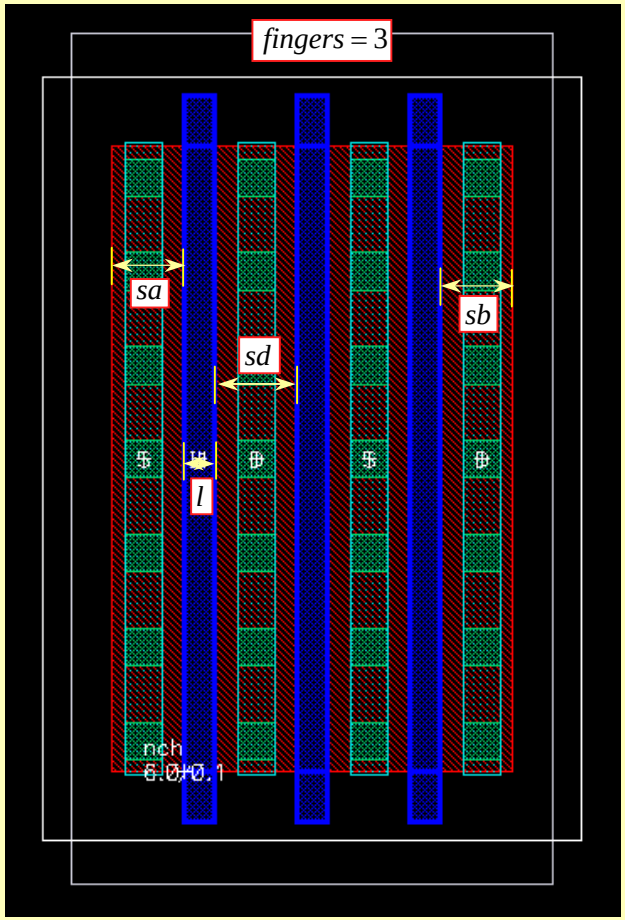

$SA = sa$: *In the netlist, SA equal to sa*

$SB = sb$: *In the netlist, SB equal to sb*

$SB = sd$: *In the netlist, SB equal to sd*

TSMC Confidential Information 556786 PGC PROGATE GROUP CORPORATION 07/15/2013

Empowering Innovation SM

- In this page, we will description that the PDK how to calculate SA, SB and SD.

Case II

- ***Dog Bone MOS with multi fingers***

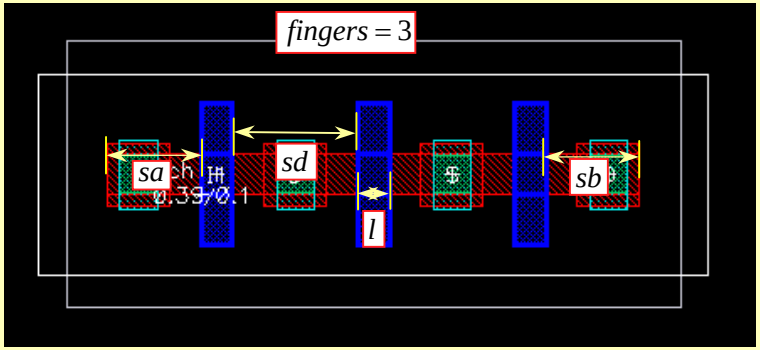

$SA = sa$: *In the netlist, SA equal to sa*

$SB = sb$: *In the netlist, SB equal to sb*

$SB = sd$: *In the netlist, SB equal to sd*

TSMC Confidential Information 556786 PGC PROGATE GROUP CORPORATION 07/15/2013

Empowering Innovation SM

- In this page, we will description that the PDK how to calculate SAeff and SBeff.

Case III

- ***Normal MOS with multi fingers after abut***

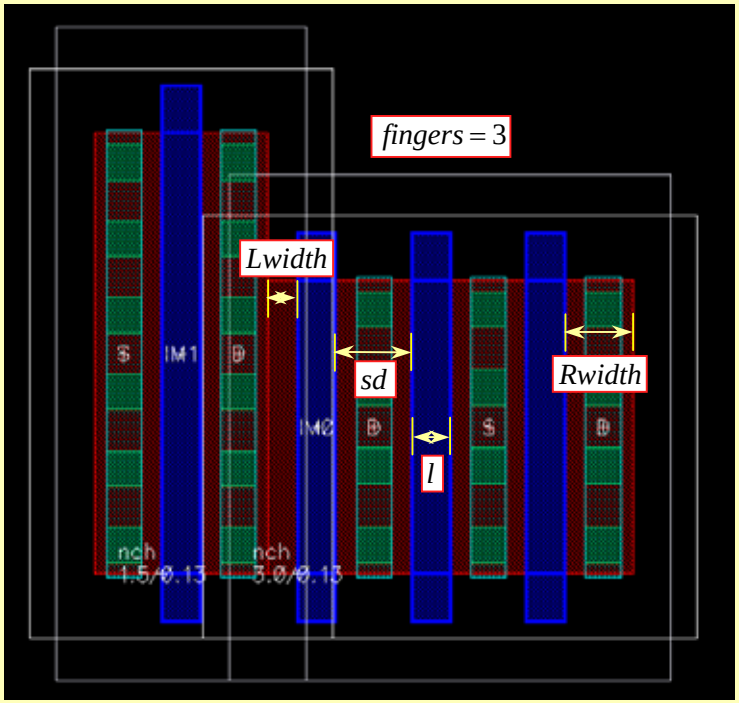

$$Sum1_i = 1/(Lwidth + i \times (sd + l) + 0.5 \times l)$$

$$SAeff = fingers / \sum_{i=0}^{fingers-1} Sum1_i - 0.5 \times l$$

$$Sum2_i = 1/(Rwidth + i \times (sd + l) + 0.5 \times l)$$

$$SBeff = fingers / \sum_{i=0}^{fingers-1} Sum2_i - 0.5 \times l$$

$$SAeff = SAeff$$

$$SBeff = SBeff$$

$SA = SAeff$: *In the netlist, SA equal to SAeff*

$SB = SBeff$: *In the netlist, SB equal to SBeff*

$SA = sa$: *In the netlist, SA equal to sa*

$SB = sb$: *In the netlist, SB equal to sb*

$SB = sd$: *In the netlist, SB equal to sd*

TSMC Confidential Information 556786 PGC PROGATE GROUP CORPORATION 07/15/2013

Empowering Innovation SM