HMI Subsystem

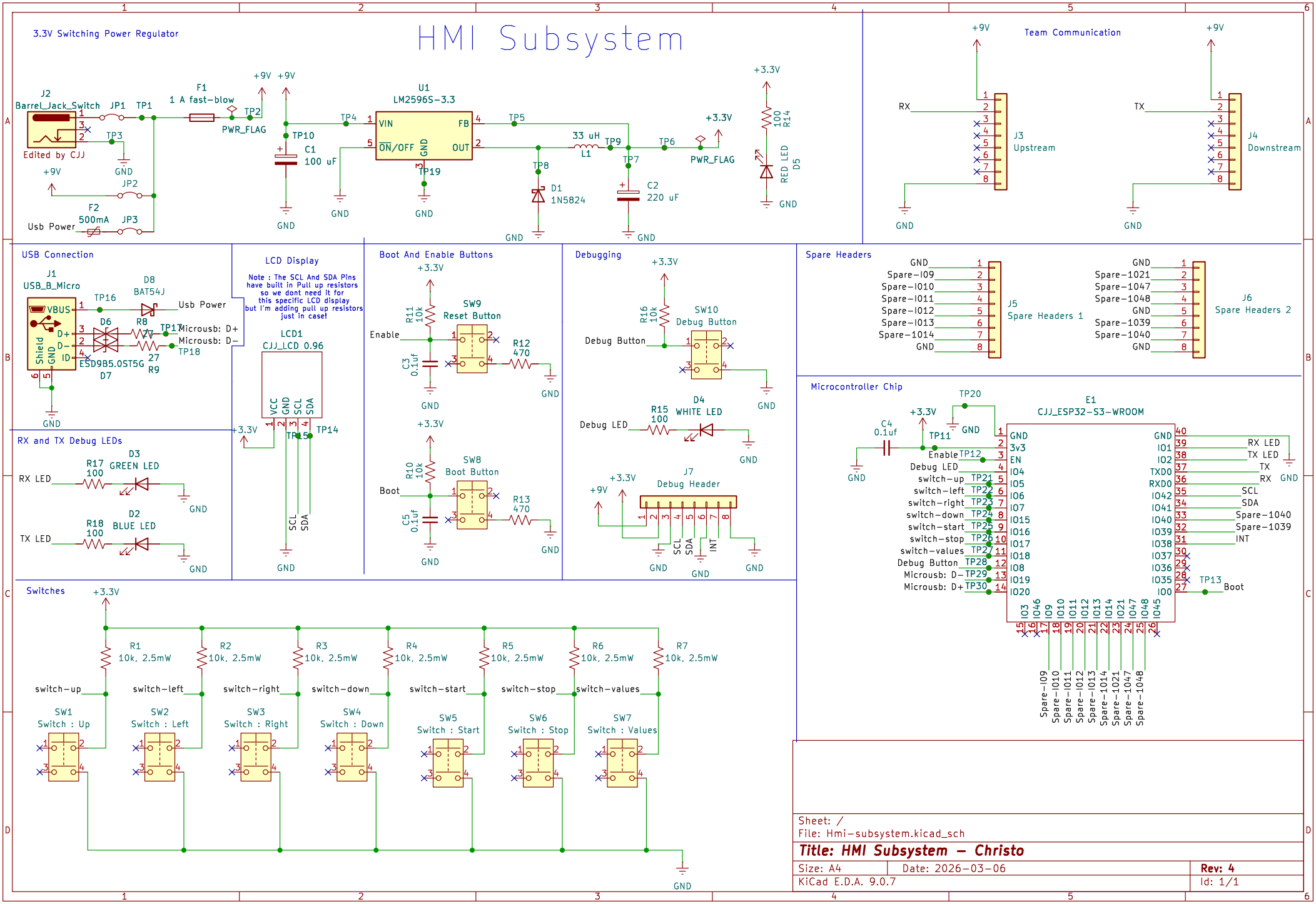

Sheet: /
File: Hmi-subsystem.kicad_sch

Title: HMI Subsystem – Christo

Size: A4	Date: 2026-03-06	Rev: 4
KiCad E.D.A. 9.0.7		Id: 1/1