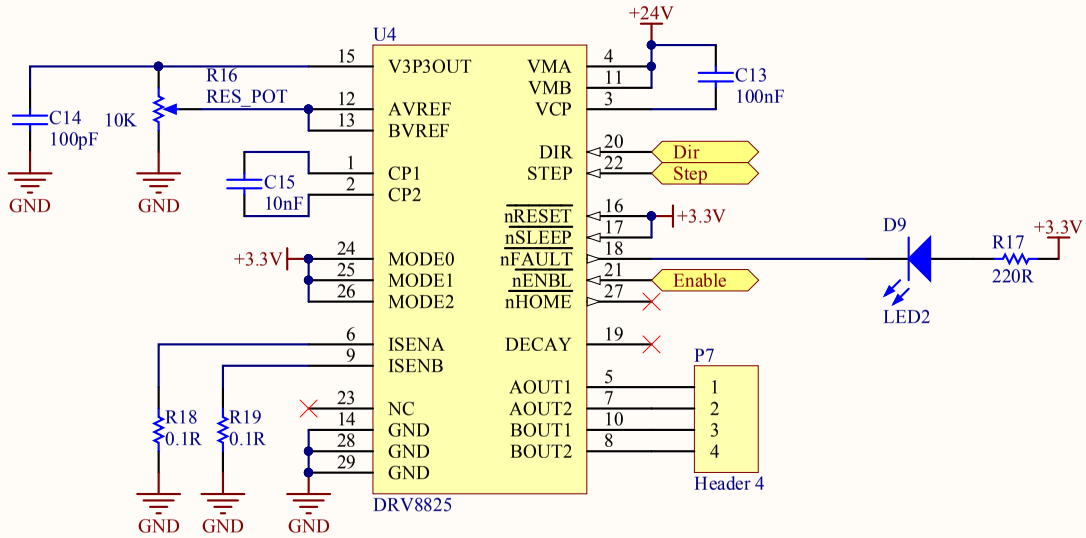

Title		
Size A	Number	Revision
Date: 12/16/2013		Sheet of
File: E:\Documents\..\Stepper_driver.SchDoc		Drawn By: