(b) The triangle PQR is the image of the triangle DEF under an enlargement.
(The diagram is not drawn to scale.)
The scale factor of the enlargement, k, is 2·5.
$|EF| = 3$ cm.

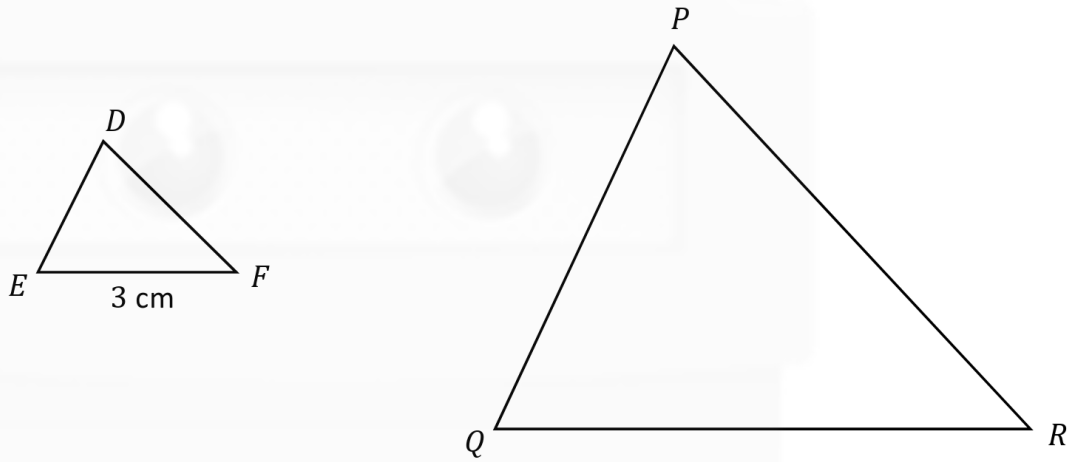

(i) Use the scale factor to find $|QR|$.

(ii) The area of the triangle PQR is 18·75 cm^2.
Find the area of triangle DEF.

(b)(i)	$\lvert QR \rvert = 3 \times 2{\cdot}5 = 7{\cdot}5 \text{ cm}$	**Scale 5B (0, 2, 5)** *Partial Credit:* Work of merit • Relevant work with $2{\cdot}5$ and 3 *Full Credit:* • Correct answer without supporting work
(b)(ii)	$\text{Area } DEF = \dfrac{18{\cdot}75}{2{\cdot}5^2} = 3 \text{ cm}^2$	**Scale 10C (0, 3, 7, 10)** *Low Partial Credit:* Work of merit • Relevant work with $2{\cdot}5$ and $18{\cdot}75$ e. g. $\dfrac{18{\cdot}75}{2{\cdot}5} = 7{\cdot}5$ *High Partial Credit:* Significant Work • Relevant work with $2{\cdot}5^2$ and $18{\cdot}75$

Question 6 **(25 marks)**

In the diagram below: $|\angle CAB| = 80°$ and $|\angle DCE| = 60°$.
$|\angle ABC| = (x + y)°$ and $|\angle BCA| = (3x + y)°$, where $x, y \in \mathbb{N}$.

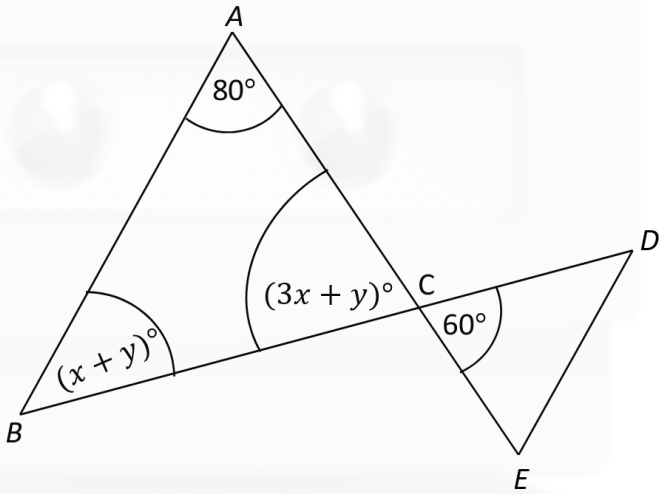

(a) Find the value of x and the value of y.

$x =$ $y =$

(b) In the diagram below, DE is parallel to FG. $|DH| = 5$ cm. $|HE| = 12$ cm. $|HG| = 30$ cm. The distance from D to F is x cm. Find the value of x.

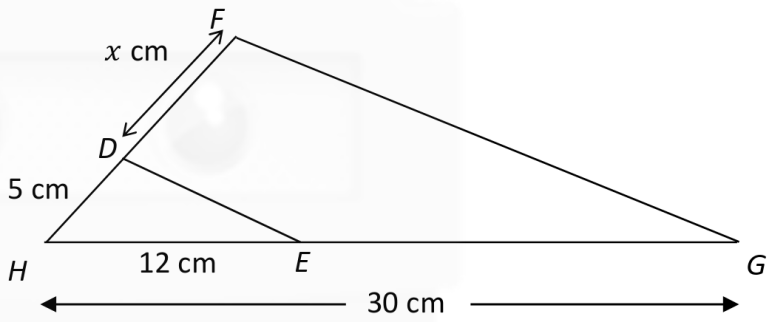

Q6	Model Solution – 25 Marks	Marking Notes
(a)	$(3x+y)+(x+y)+80=180$ $\Rightarrow 4x+2y=100$ $\Rightarrow 2x+y=50$ Simultaneous Equations: $3x+y=60$ $\underline{-2x-y=-50}$ $x=10$ $\Rightarrow y=30$ Giving $x=10$ and $y=30$	**Scale 20D (0, 5, 10, 15, 20)** *Low Partial Credit:* Work of merit • Knowledge of sum of angles in a triangle = 180° shown • Knowledge of vertically opposite angles being equal shown *Mid Partial Credit:* • One relevant equation found *High Partial Credit:* • Two relevant equations found • Finds one solution • Correct answer without supporting work
(b)	$\frac{x}{5}=\frac{18}{12}$ $12x=90$ $x=7{\cdot}5$ cm	**Scale 5C (0, 3, 4, 5)** *Low Partial Credit:* Work of merit • Any relevant work with ratio of lengths *High Partial Credit:* • Correct ratio equality • Incorrect ratio equality and finished correctly

Question 7 **(35 marks)**

The diagram below shows the right-angled triangle *ABC*, which is used in the logo for a company called *Deane Construction Limited (DCL)*. The triangle *PQR* is the image of *ABC* under an enlargement.

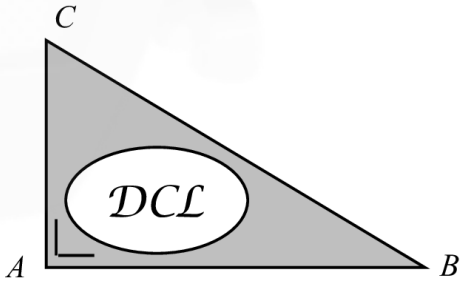

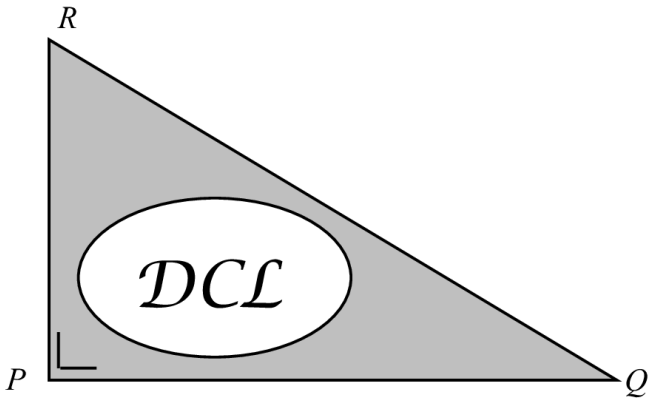

(a) **(i)** Construct the centre of enlargement and label it O.

(ii) Measure, in centimetres, $|OB|$ and $|OQ|$.

$|OB| =$ _____ $|OQ| =$ _____

(iii) Use your measurements to find the scale factor of the enlargement, correct to one decimal place.

(b) The area of the triangle ABC is $7{\cdot}5\ \text{cm}^2$.
Use the scale factor to find the area of the image triangle PQR under the enlargement.

(c) **(i)** Given that $|AB| = 5$ cm, use the scale factor to find $|PQ|$.

(ii) Given that $|QR| = 8{\cdot}7$ cm, use the scale factor to find $|BC|$.

(iii) Hence, show that $|\angle ABC| = |\angle PQR|$.

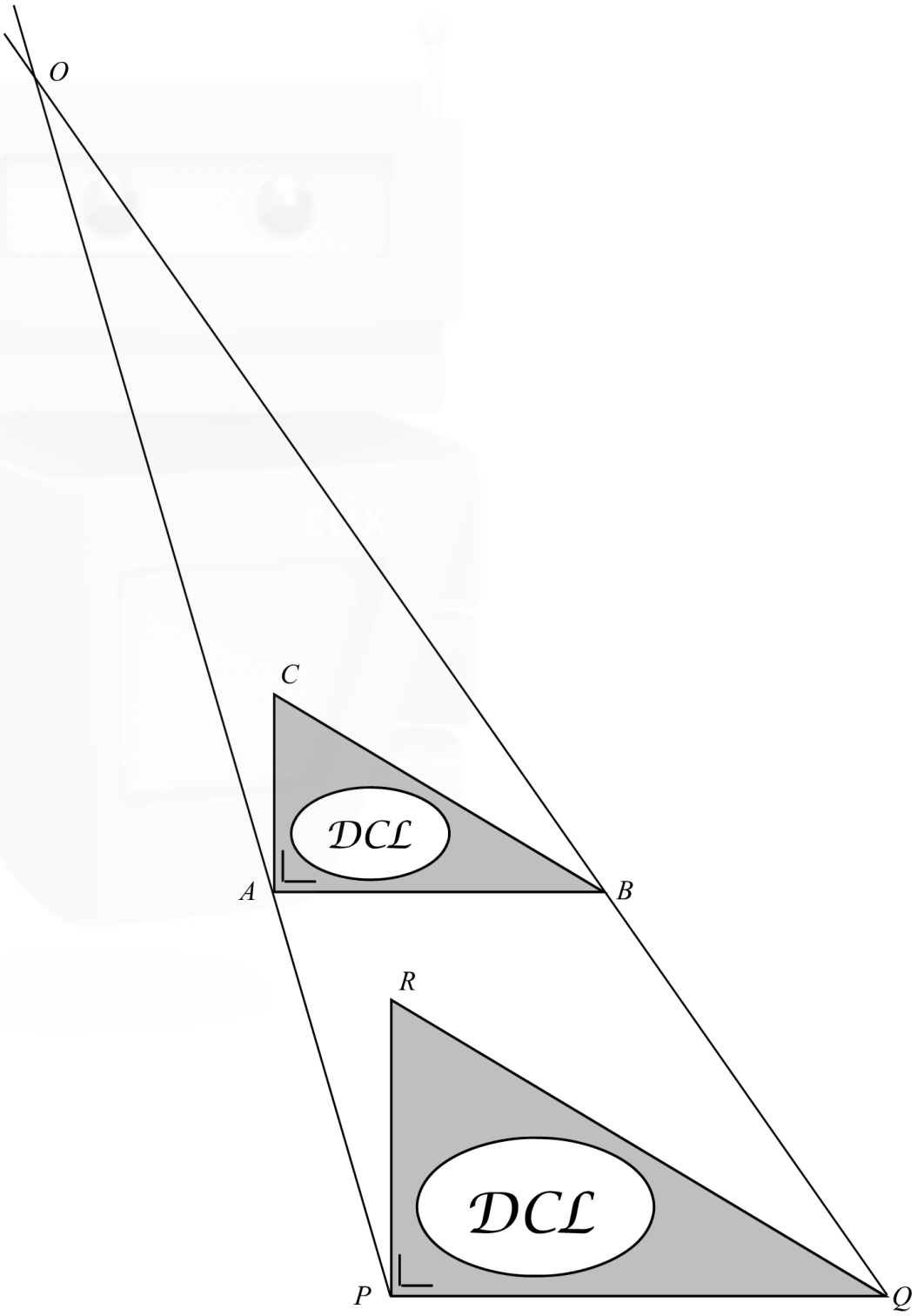
O
C
DCL
A
B
R
DCL
P
Q

(a) **(i)** Construct the centre of enlargement and label it O.

(ii) Measure, in centimetres, $|OB|$ and $|OQ|$.

$|OB| = 15$ cm $\qquad\qquad$ $|OQ| = 22 \cdot 5$ cm

(iii) Use your measurements to find the scale factor of the enlargement, correct to one decimal place.

$$\frac{|OQ|}{|OB|} = \frac{22 \cdot 5}{15} = 1 \cdot 5$$

(b) The area of the triangle ABC is $7{\cdot}5$ cm^2.
Use the scale factor to find the area of the image triangle PQR under the enlargement.

$$7 \cdot 5 \times 1 \cdot 5^2 = 16 \cdot 875 \text{ cm}^2$$

(c) **(i)** Given that $|AB| = 5$ cm, use the scale factor to find $|PQ|$.

$$|PQ| = |AB| \times 1 \cdot 5 = 5 \times 1 \cdot 5 = 7 \cdot 5 \text{ cm}$$

(ii) Given that $|QR| = 8{\cdot}7$ cm, use the scale factor to find $|BC|$.

$$|QR| = |BC| \times 1 \cdot 5 \quad \Rightarrow \quad |BC| = \frac{|QR|}{1 \cdot 5} = \frac{8 \cdot 7}{1 \cdot 5} = 5 \cdot 8$$

(iii) Hence, show that $|\angle ABC| = |\angle PQR|$.

$$\cos|\angle ABC| = \frac{5}{5 \cdot 8} \qquad\qquad \cos|\angle PQR| = \frac{7 \cdot 5}{8 \cdot 7} = \frac{5}{5 \cdot 8}$$

$\cos|\angle ABC| = \cos|\angle PQR| \quad \Rightarrow \quad |\angle ABC| = |\angle PQR|$ since angles are acute