Exercise 5F

1. What is the volume of a cylindrical pipe of radius 7 cm and length 20 cm.
Use the π key on the calculator, giving your answer correct to 1 place of decimals.

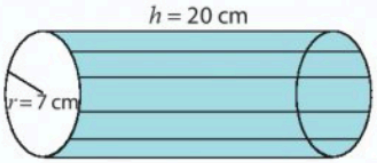

2. Calculate the volume of each of the following cylinders:
Take $\pi = 3.14$ and give each answer correct to 1 decimal place.

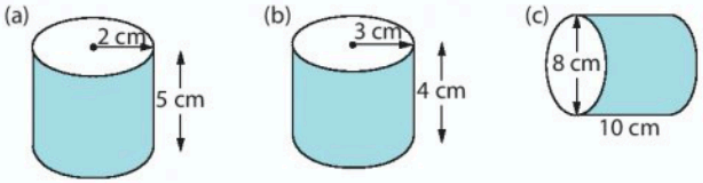

3. A cylindrical tank has dimensions $r = 11$ m, $h = 3$ m.
Find the volume of the tank, take $\pi = 3.14$ and give each answer correct to 1 decimal place.

4. A solid cylinder has a radius of 5 cm and a height of 21 cm. It is made from a metal that has a density of 6 g per cm^3. Calculate the mass of the cylinder correct to 2 significant figures.
Take $\pi = 3.14$

5. A cylinder has a volume of 100 cm^3. Its height is 10 cm. What is the area of its circular end.
Take $\pi = 3.14$

6. Calculate the volume of a sphere of radius 15 mm.
Take $\pi = 3.14$ and give your answer correct to 2 significant figures.

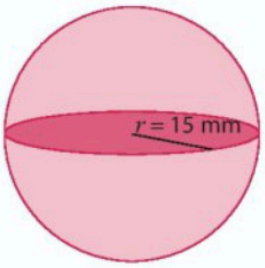

7. Three spheres fit exactly into a hollow rectangular box as shown:
(i) What is the diameter of each sphere?
(ii) What is the radius of each sphere?
(iii) What is the width of the box?
(iv) What is the height of the box?
(v) What is the volume of the box?
(vi) What is the volume of a sphere correct to the nearest cm^3? Take $\pi = 3.14$.
(vii) What is the volume of empty space in the box?

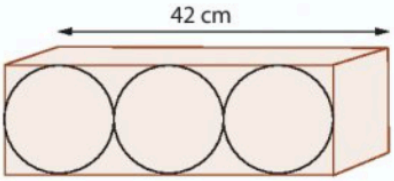

8. A hollow metal hemi-sphere is used to keep food warm on a tray.
The internal radius is 15 cm.
Taking $\pi = \frac{22}{7}$, calculate the volume of the hemi-sphere correct to the nearest cm^3.

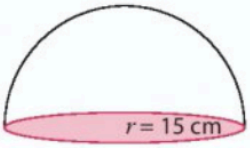

9. A brass tube has a diameter of 20 cm as shown in the diagram.
The wall of the tube is 2 cm thick.
Calculate:
(i) the internal diameter of the tube
(ii) the internal radius of the tube
(iii) the internal volume (air) of the tube
(iv) the external volume of the tube
(v) the volume of brass in the tube. Take $\pi = 3.14$.

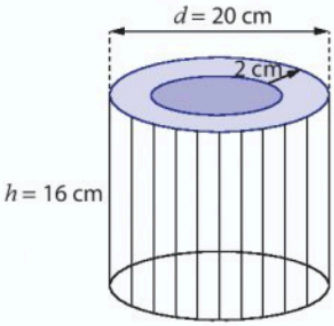

10. The diagram on the right is of a cylinder with a hemi-spherical top:

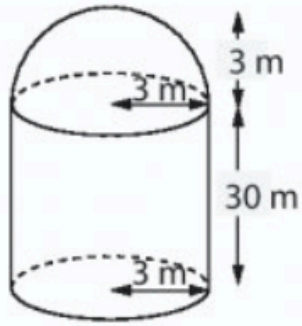

(i) What is the height of the cylindrical part?

(ii) What is the radius of the cylindrical part?

(iii) What is the radius of the hemi-spherical part?

(iv) Write down a formula for calculating the volume of a cylinder and use it to find the volume of the cylindrical part correct to 3 significant figures.

(v) Write down a formula for calculating the volume of a sphere and use it to find the volume of the hemi-spherical part correct to 3 significant figures. Take $\pi = 3.14$.