nets

Five cuboids are shown, not to scale, with pictures of their nets.

Use both pictures of each cuboid to work out the missing lengths labeled.

Then find the surface area of each cuboid.

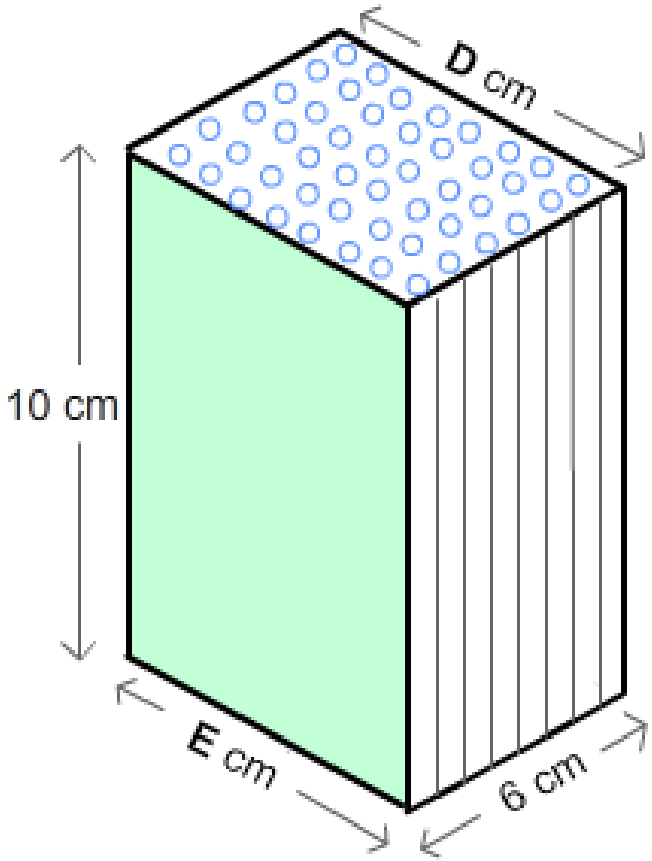

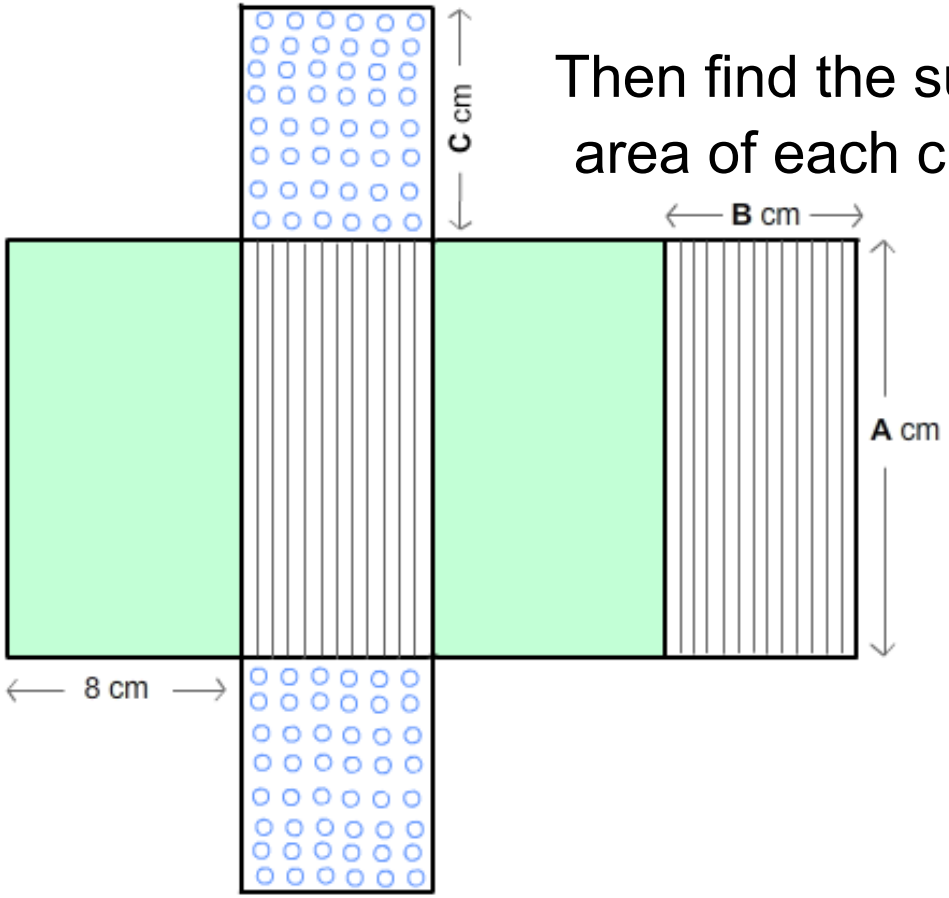

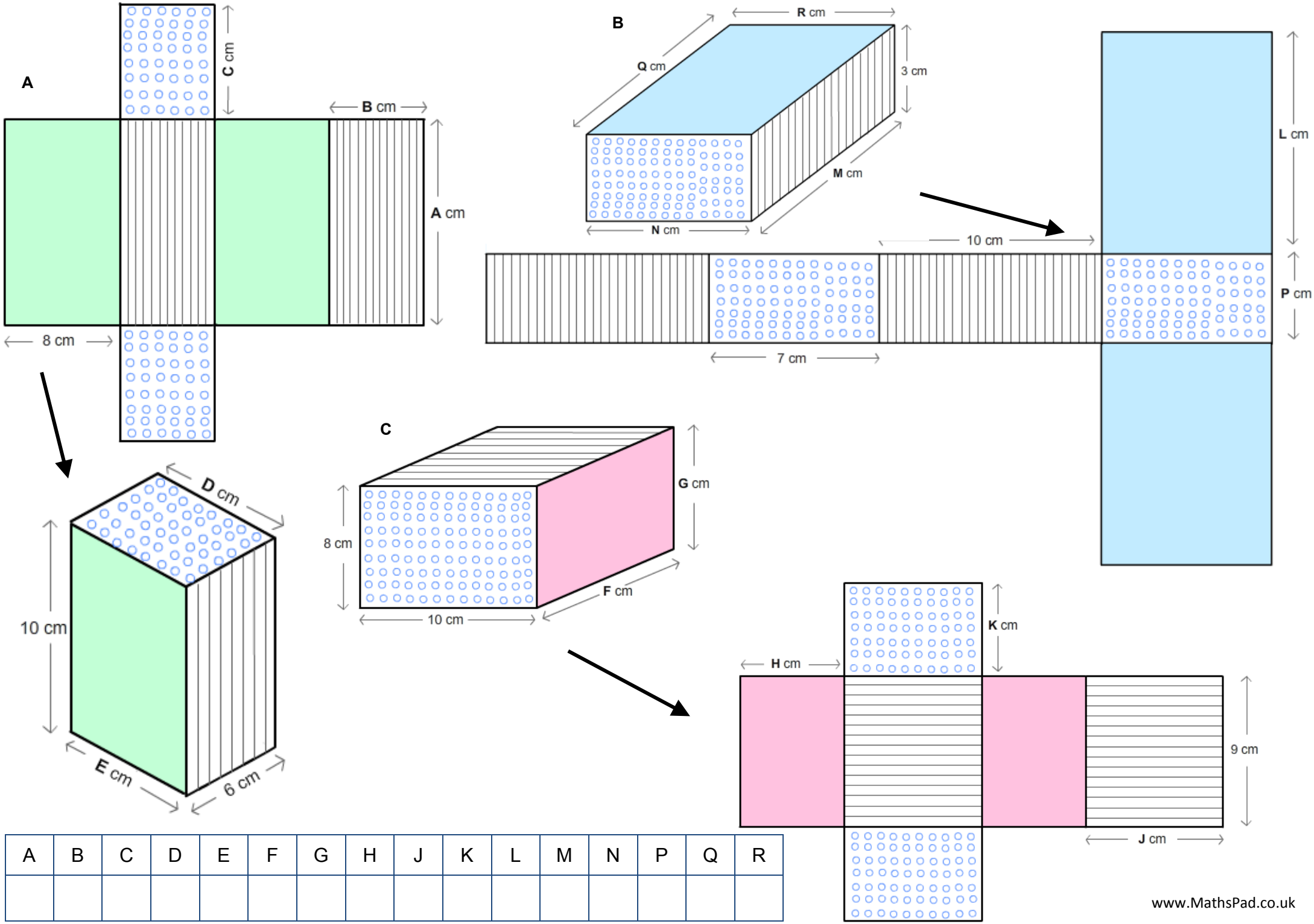

A	B	C	D	E	F	G	H	J	K	L	M	N	P	Q	R

www.MathsPad.co.uk

D

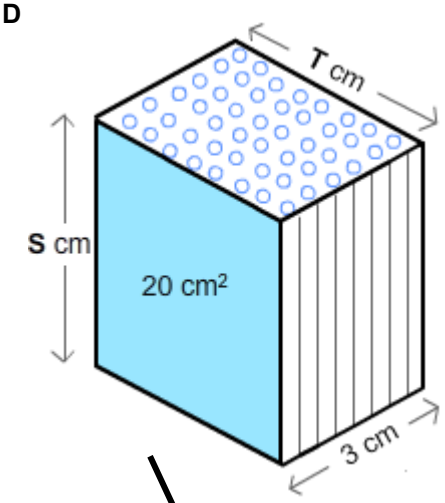
T cm
S cm
20 cm²
3 cm

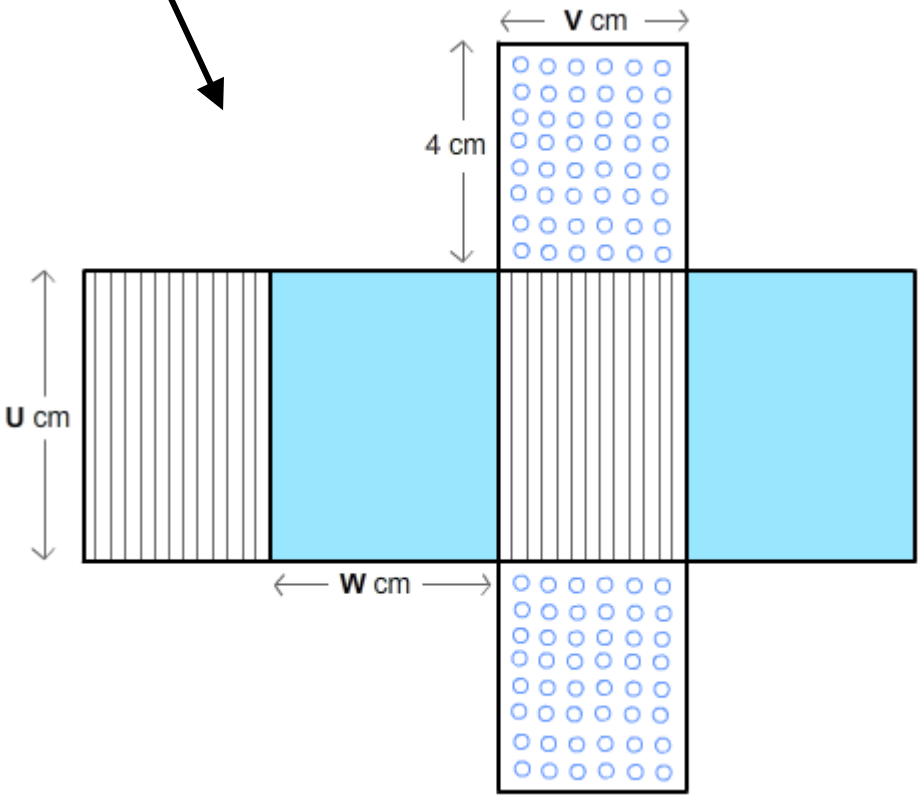
V cm
4 cm
U cm
W cm

E

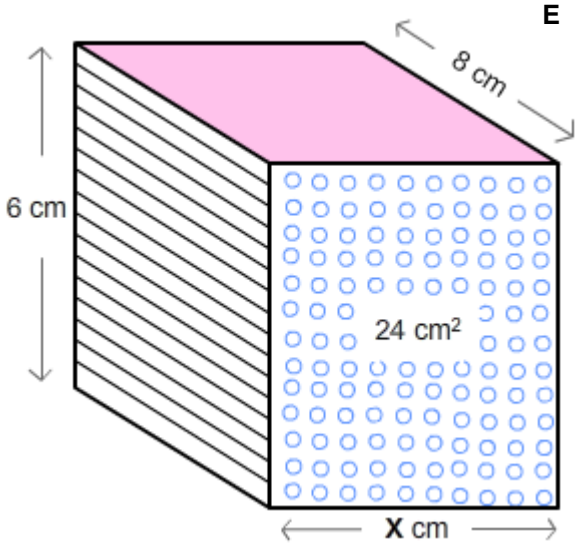
8 cm
6 cm
24 cm²
X cm

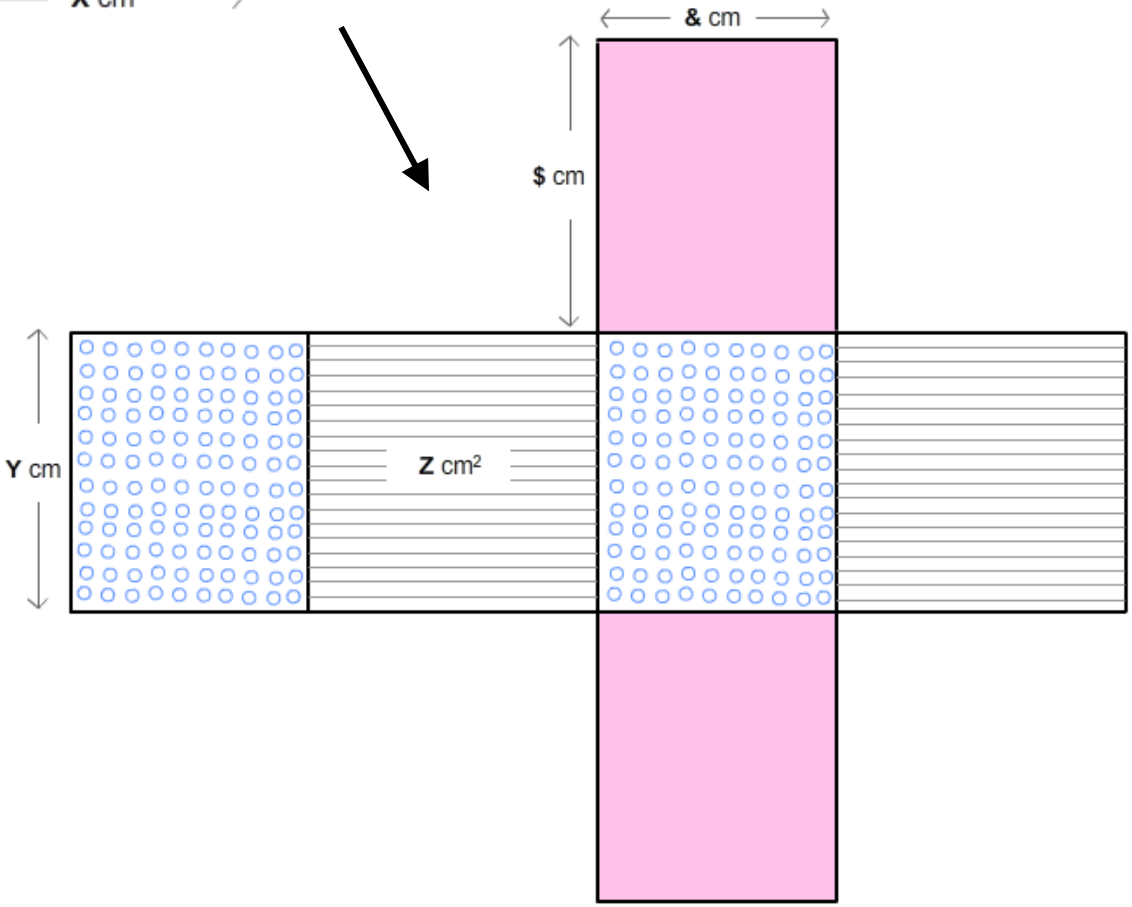
& cm
$ cm
Y cm
Z cm²

S	T	U	V	W	X	Y	Z	$	&

answers

A	B	C	D	E	F	G	H	J	K	L	M	N	P	Q	R
10	6	8	8	8	9	8	8	10	8	10	10	7	3	10	7

S	T	U	V	W	X	Y	Z	$	&
5	4	5	3	4	4	6	48	8	4

Surface areas

A: 376cm^2 B: 242cm^2 C: 484cm^2 D: 94cm^2 E: 208cm^2

this resource was made by mathspaduk.

please visit our tes store and website for more free & subscription resources

www.MathsPad.co.uk