TODO :
- Rename symbole pin

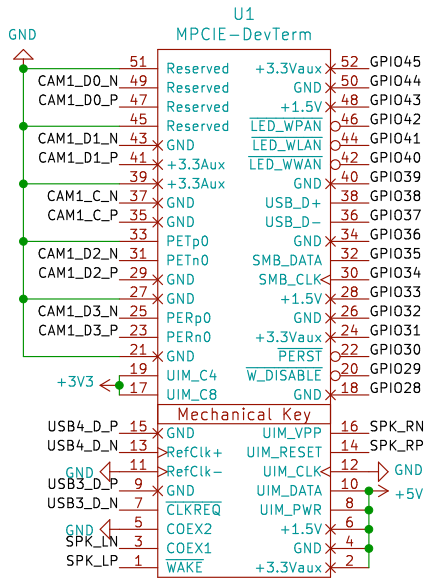

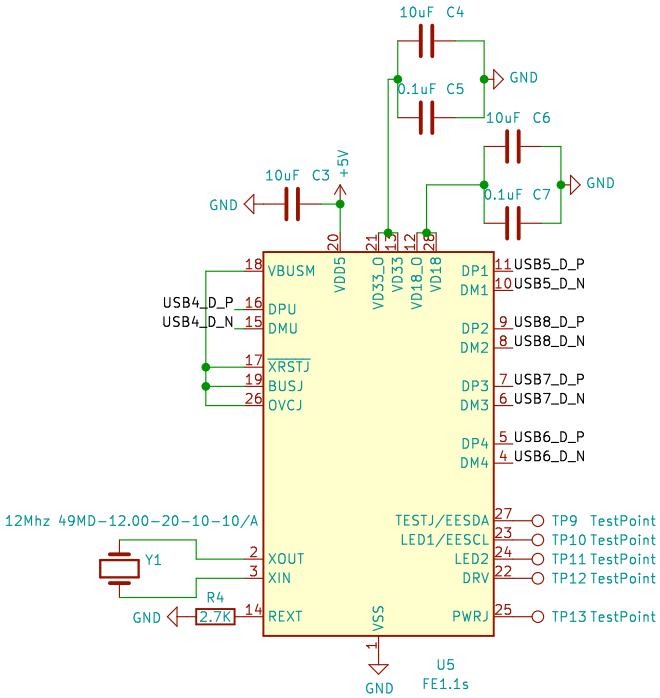

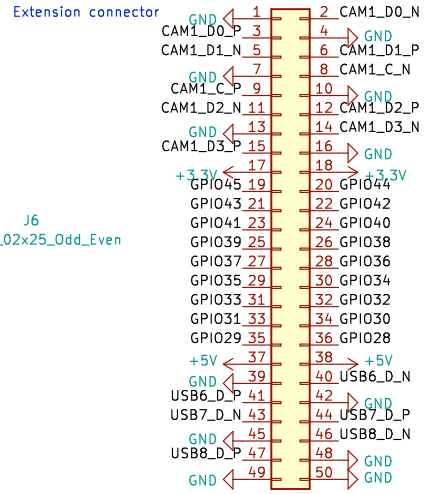

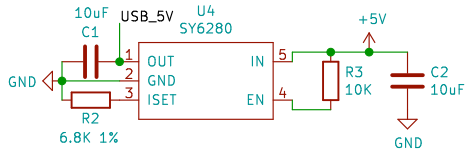

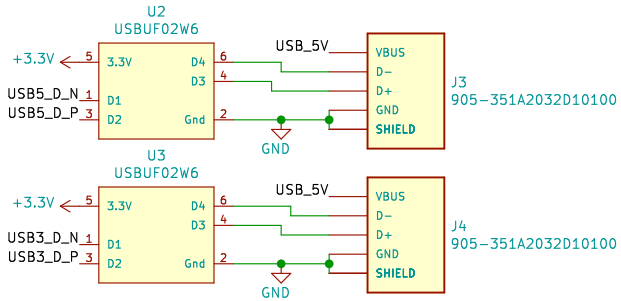

FAN

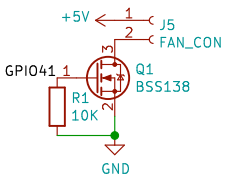

SPEAKER

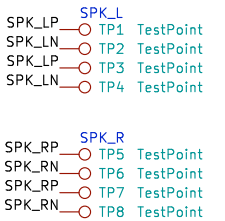

Sheet: /
File: DCEXT.sch

Title:

Size: A4	Date:	Rev:
KiCad E.D.A. kicad (5.1.10-1-10_14)		Id: 1/1