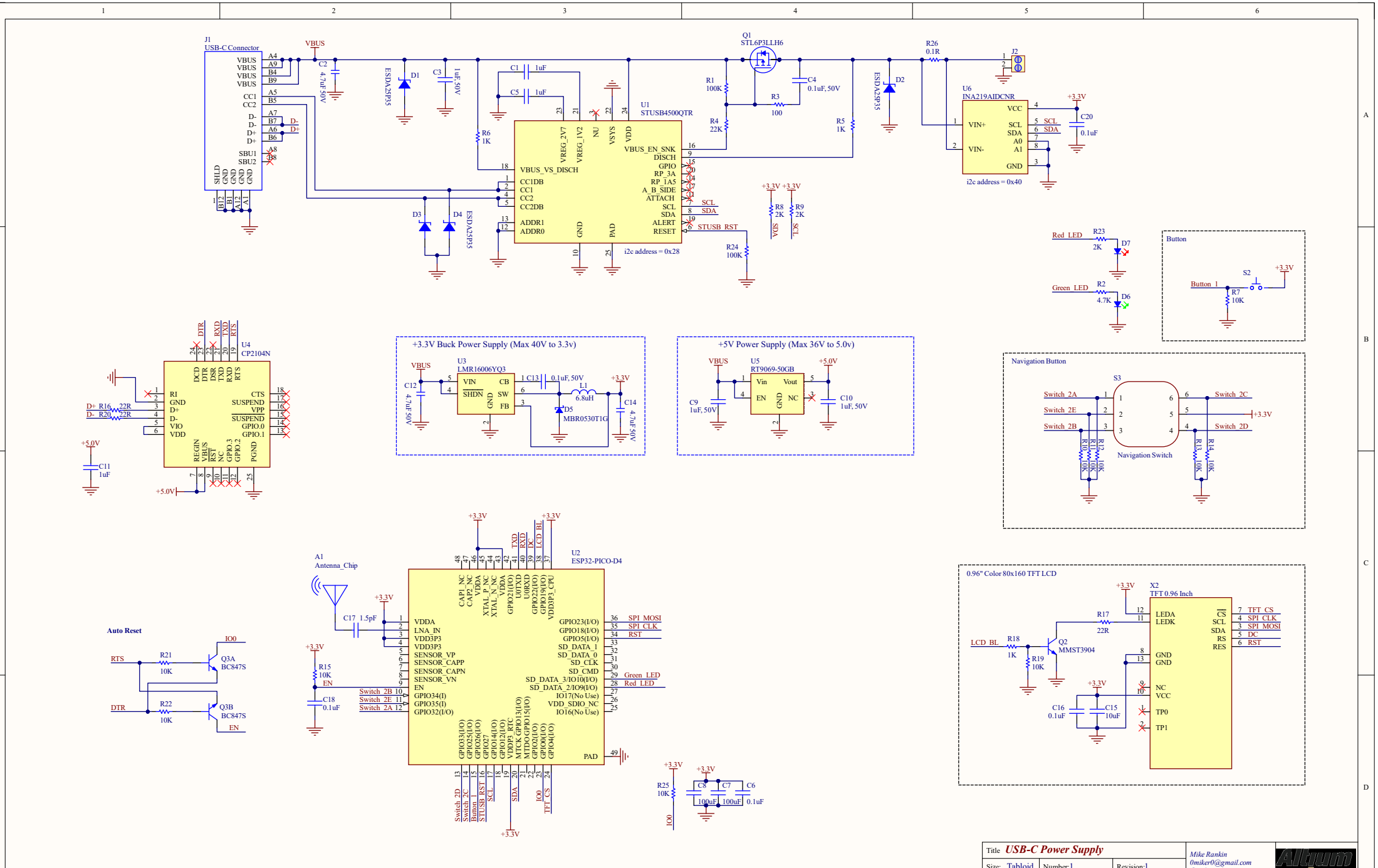
J1
USB-C Connector
VBUS
CC1
CC2
D-
D+
SBU1
SBU2
SHLD
GND
C2
4.7uF,50V
ESDA25P35
D1
C3
1uF,50V
C1 1uF
C5 1uF
R6
1K
U1
STUSB4500QTR
VBUS_EN_SNK
DISCH
GPIO
RP_3A
RP_1A5
A_B_SIDE
ATTACH
SCL
SDA
ALERT
RESET
STUSB_RST
VBUS_VS_DISCH
CC1DB
CC2DB
ADDR1
ADDR0
VREG_2V7
VREG_1V2
NU
VSYS
VDD
PAD
i2c address = 0x28
D3
D4
R1
100K
R4
22K
Q1
STL6P3LLH6
R3
100
C4
0.1uF, 50V
R5
1K
D2
R26
0.1R
J2
U6
INA219AIDCNR
VIN+
VIN-
VCC
A0
A1
i2c address = 0x40
C20
0.1uF
+3.3V
R8
2K
R9
2K
R24
100K
Red_LED
R23
2K
D7
Green_LED
R2
4.7K
D6
Button
S2
Button_1
R7
10K
U4
CP2104N
DCD
DTR
DSR
TXD
RXD
RTS
RI
GND
D+
D-
VIO
VDD
CTS
SUSPEND
VPP
SUSPEND
GPIO.0
GPIO.1
REGIN
VBUS
RST
NC
GPIO.3
GPIO.2
PGND
R16 22R
R20 22R
C11
1uF
+5.0V
+3.3V Buck Power Supply (Max 40V to 3.3v)
U3
LMR16006YQ3
VIN
SHDN
CB
SW
FB
C12
4.7uF 50V
C13 0.1uF, 50V
L1
6.8uH
D5
MBR0530T1G
C14
4.7uF 50V
+5V Power Supply (Max 36V to 5.0v)
U5
RT9069-50GB
Vin
Vout
EN
NC
C9
1uF, 50V
C10
1uF, 50V
Navigation Button
S3
Switch_2A
Switch_2E
Switch_2B
Switch_2C
Switch_2D
Navigation Switch
R10 10K
R11 10K
R12 10K
R13 10K
R14 10K
A1
Antenna_Chip
U2
ESP32-PICO-D4
C17 1.5pF
R15
10K
EN
C18
0.1uF
VDDA
LNA_IN
VDD3P3
VDD3P3
SENSOR_VP
SENSOR_CAPP
SENSOR_CAPN
SENSOR_VN
EN
GPIO34(I)
GPIO35(I)
GPIO32(I/O)
GPIO23(I/O)
GPIO18(I/O)
GPIO5(I/O)
SD_DATA_1
SD_DATA_0
SD_CLK
SD_CMD
SD_DATA_3/IO10(I/O)
SD_DATA_2/IO9(I/O)
IO17(No Use)
VDD_SDIO_NC
IO16(No Use)
PAD
SPI_MOSI
SPI_CLK
RST
Green_LED
Red_LED
Switch_2B
Switch_2E
Switch_2A
Switch_2D
Switch_2C
Button_1
STUSB_RST
SCL
SDA
IO0
TFT_CS
R25
10K
C8
100uF
C7
100uF
C6
0.1uF
Auto Reset
RTS
DTR
R21
10K
R22
10K
Q3A
BC847S
Q3B
BC847S
EN
0.96" Color 80x160 TFT LCD
X2
TFT 0.96 Inch
LEDA
LEDK
GND
GND
NC
VCC
TP0
TP1
CS
SCL
SDA
RS
RES
TFT_CS
SPI_CLK
SPI_MOSI
DC
RST
R17
22R
R18
1K
R19
10K
Q2
MMST3904
LCD_BL
C16
0.1uF
C15
10uF
Title USB-C Power Supply
Size: Tabloid
Number:1
Revision:1
Date: 2021-09-16
Time: 12:25:37 PM
Sheet 1 of 1
Mike Rankin
0miker0@gmail.com
@mikerankin
Altium Designer