Latest updates: https://dl.acm.org/doi/10.1145/3792746.3792779

PDF Download
3792746.3792779.pdf
15 March 2026
Total Citations: 0
Total Downloads: 41

Published: 25 February 2026

Citation in BibTeX format

ICHIH 2025: 2025 4th International Conference on Health Big Data and Intelligent Healthcare
*December 12 - 14, 2025*
*Wuhan, China*

RESEARCH-ARTICLE

# MSANDTI: Multi-Scale Attention Network for Drug-Target Interaction Prediction with Robust Cold-Start Generalization

**HUAN LIU**, Shaoxing University, Shaoxing, Zhejiang, China

**JIA LIU**, Shaoxing University, Shaoxing, Zhejiang, China

**XINWEN LIU**, Shaoxing University, Shaoxing, Zhejiang, China

**DONGHUA YU**, Shaoxing University, Shaoxing, Zhejiang, China

**Open Access Support** provided by:

**Shaoxing University**

ICHIH '25: Proceedings of the 2025 4th International Conference on Health Big Data and Intelligent Healthcare (December 2025)
https://doi.org/10.1145/3792746.3792779
ISBN: 9798400722110

# MSANDTI: Multi-Scale Attention Network for Drug-Target Interaction Prediction with Robust Cold-Start Generalization

Huan Liu
Department of Computer Science and Engineering
Shaoxing University
Shaoxing, Zhejiang, China
25020854118@usx.edu.cn

Jia Liu
Department of Computer Science and Engineering
Shaoxing University
Shaoxing, Zhejiang, China
25020854109@usx.edu.cn

Xinwen Liu
Department of Pharmacy
the Affiliated Hospital of Shaoxing University
Shaoxing, Zhejiang, China
liuxinwen@usx.edu.cn

Donghua Yu*
Department of Computer Science and Engineering
Shaoxing University
Shaoxing, Zhejiang, China
Zhejiang-Saudi Arabia Joint Laboratory on GeoAI
Shaoxing University
Shaoxing, Zhejiang, China
donghuayu@usx.edu.cn

## Abstract

Accurate prediction of drug–target interactions (DTIs) is crucial for accelerating drug discovery and enabling drug repositioning. However, existing computational methods often struggle with modeling multi-source heterogeneous biological data and suffer from performance degradation under cold-start scenarios (e.g., new drugs or targets unseen during training). To address these challenges, **MSANDTI** (Multi-Scale Attention Network for DTI) is proposed—a novel framework that integrates heterogeneous graph representation learning with semantic-level attention mechanisms. MSANDTI first employs the BIONIC framework to extract multi-order neighborhood features from diverse drug and protein networks, preserving both local and global topological information. It then introduces a multi-head semantic-layer attention network to dynamically fuse cross-modal representations and capture context-aware drug–target semantic associations. Extensive experiments on benchmark datasets demonstrate that MSANDTI consistently outperforms state-of-the-art baselines, including SVM, Random Forest, DeepPurpose, DTINet, and NeoDTI, across four evaluation settings: warm start, drug cold start, target cold start, and double cold start. Notably, in the double cold-start scenario, MSANDTI achieves an AUROC of 0.851 and AUPRC of 0.856, significantly surpassing existing methods by over 10% on average. The results highlight the robustness and generalizability of MSANDTI in real-world DTI prediction tasks.

## CCS Concepts

• **Applied computing → Biological networks**.

*Corresponding author

This work is licensed under a Creative Commons Attribution 4.0 International License.
*ICHIH 2025, Wuhan, China*
© 2025 Copyright held by the owner/author(s).
ACM ISBN 979-8-4007-2211-0/25/12
https://doi.org/10.1145/3792746.3792779

## Keywords

Drug–Target Interaction, Heterogeneous Graph, Graph Representation Learning, Attention Mechanism, Cold Start

**ACM Reference Format:**
Huan Liu, Jia Liu, Xinwen Liu, and Donghua Yu. 2025. MSANDTI: Multi-Scale Attention Network for Drug-Target Interaction Prediction with Robust Cold-Start Generalization. In *2025 4th International Conference on Health Big Data and Intelligent Healthcare (ICHIH 2025), December 12–14, 2025, Wuhan, China.* ACM, New York, NY, USA, 5 pages. https://doi.org/10.1145/3792746.3792779

## 1 Introduction

Drug–target interaction (DTI) prediction is a fundamental task in computational drug discovery, playing a pivotal role in both the identification of new therapeutic targets and the repurposing of existing drugs [2, 3]. Traditional experimental approaches for DTI discovery are time-consuming and resource-intensive, often requiring extensive laboratory testing to validate potential interactions between compounds and biological targets. This has led to the development of computational models aimed at predicting DTIs using machine learning techniques, thereby accelerating the drug discovery process and reducing costs.

Despite significant progress in this field, several key challenges remain unresolved. First, data heterogeneity poses a major obstacle: DTI prediction involves integrating diverse types of information, including chemical structures, protein sequences, gene expression profiles, and clinical data. Each type of data provides unique insights into drug and target properties but also introduces complexity in model design. Second, cold-start scenarios [7, 12], where either drugs or targets (or both) are novel and lack sufficient training data—are particularly challenging for traditional machine learning models. These models typically rely on rich feature representations derived from known interactions, making them less effective when encountering unseen entities.

While graph neural networks (GNNs) have shown promise in capturing topological patterns, most existing DTI predicting models either rely solely on molecular features (e.g., DeepPurpose [11]) or

use simplistic network embeddings that fail to preserve multi-scale structural information. Moreover, few methods explicitly model the semantic heterogeneity inherent in biological networks (e.g., drug–disease vs. protein–protein interactions) [6, 14].

To address these challenges, we propose MSANDTI, a novel framework that combines multi-scale heterogeneous graph representation learning with semantic-level attention mechanisms. MSANDTI leverages the BIONIC framework to extract multi-order neighborhood features from diverse biological networks, capturing both local and global topological structures. By integrating these features through a semantic-layer attention network, MSANDTI dynamically fuses cross-modal representations to generate interaction-aware joint embeddings. This approach not only enhances the model's ability to generalize across different biological contexts but also improves its robustness in cold-start scenarios. The contributions of our work can be summarized as follows:

(1) *Multi-scale heterogeneous network representation* via BIONIC [4], which learns 512-dimensional embeddings by aggregating up to third-order neighbors across multiple biological networks;
(2) A *semantic-layer attention network* based on Transformer architecture, which dynamically weights and fuses drug and target representations to generate interaction-aware joint embeddings.
(3) The model is evaluated under four realistic scenarios, with particular emphasis on cold-start settings. Results confirm its superior performance and robustness, offering a practical tool for AI-driven drug discovery.

## 2 Related Works

**Feature-based DTI prediction.** Early computational approaches rely on handcrafted molecular and protein features. For instance, support vector machines (SVMs) and random forests (RFs) use Extended Connectivity Fingerprint (ECFP) for drugs and amino acid composition (AAC) for proteins to train classifiers [3]. Deep learning models like DeepDTI [11] employ deep neural networks to learn non-linear mappings from raw features to interaction labels, achieving strong performance in warm-start settings but struggling with unseen entities. While these methods have shown promise in certain settings, they often struggle with generalization due to their reliance on fixed feature representations. Moreover, these methods do not account for the relational structure inherent in biological networks, limiting their ability to capture complex interactions between drugs and targets. The multi-task framework DeepDTA-Gen [8] provides an optimization idea for this. The RF–SVM[15] model also improves the prediction accuracy of biomolecules by integrating multiple types of features, and the multimodal fusion framework further expands the dimension of feature utilization.

**Network-based and graph-based methods.** To incorporate relational data, various heterogeneous network models have been proposed. NRWRH [2] integrates multiple biological networks and applies label propagation to predict DTIs. Similarly, DTINet [7] constructs a heterogeneous network and uses matrix completion techniques to infer missing interactions. NeoDTI [9] extends this approach by leveraging graph neural networks (GNNs) to aggregate neighbor information, while GCNDTI [17] combines graph convolution with deep neural networks to enhance predictive performance. Meta-path-guided GMDTI[18] captures specific semantics through binary path design. NASNet-DTI[19] strengthens the utilization of relational features through node adaptive strategies , and the neighbor effect evaluation framework of CAGNN[1] also provides new ideas for semantic discrimination. Despite their effectiveness, these methods often treat all network types equally and fail to distinguish between different types of relationships (e.g., drug–disease vs. protein–protein interactions). Furthermore, many of these models rely on predefined meta-paths or heuristic rules to guide the aggregation of neighborhood information, which may limit their flexibility and scalability in handling large-scale, heterogeneous biological data.

**Heterogeneous graph learning with attention.** Recent works have explored the use of attention mechanisms to capture semantic heterogeneity in biological networks. IMCHGAN [6] employs a heterogeneous graph attention network for inductive matrix completion, while MHTAN-DTI [14] introduces a metapath-based hierarchical transformer to model cross-type dependencies. These methods leverage attention mechanisms to dynamically weight the importance of different types of relationships, allowing for more flexible and context-aware feature fusion. RSGCN[10] enhances the distribution of attention weights through multiple similarities, HIN-HG[13] further implements automatic learning of meta-path weights through super-adjacency graphs. Our approach differs from these works in two key aspects. First, we adopt the BIONIC framework [4], which does not require predefined meta-paths and learns multi-scale topological features directly from heterogeneous networks. Second, we introduce a semantic-layer attention network that operates on unified embeddings, enabling the model to capture both network-specific characteristics and cross-network relational information. This dual approach enhances the model's ability to generalize in cold-start scenarios and provides robust, semantically rich joint representations for downstream DTI prediction.

## 3 Methods

### 3.1 Heterogeneous Network Construction

A heterogeneous biological network is constructed, comprising 4 drug-related networks (e.g., drug–drug similarity, drug–disease, drug side-effect, transcriptome-based drug similarity) and 7 protein/target-related networks (e.g., PPI, gene–disease, gene–pathway, gene–chromosomal location, transcriptome-based gene similarity, gene co-expression, protein sequence similarity). Nodes represent drugs, proteins, disease or pathway; edges encode diverse biological relationships. Each network is represented by an adjacency matrix $\mathbf{A}^{(g)}$.

### 3.2 Multi-Scale Representation Learning via BIONIC

Following the BIONIC framework [4], three stacked Graph Attention Network (GAT) layers are employed per input network to extract 1st-, 2nd-, and 3rd-order neighborhood features:

$$\mathbf{H}^{(l)} = \sigma\left(\mathrm{GAT}(\mathbf{A}^{(g)},\ \mathbf{H}^{(l-1)})\right) \tag{1}$$

where $\sigma$ is LeakyReLU, and each GAT uses 10 attention heads with 68-dimensional hidden states. Network-specific features are summed and projected into a 512-dimensional unified space $\mathbf{F} \in \mathbb{R}^{n\times 512}$, optimized via network reconstruction loss.

### 3.3 MSANDTI Network Architecture

The core of MSANDTI is a unified deep architecture that integrates multi-scale heterogeneous embeddings with a semantic-aware interaction prediction module (see Fig. 1).

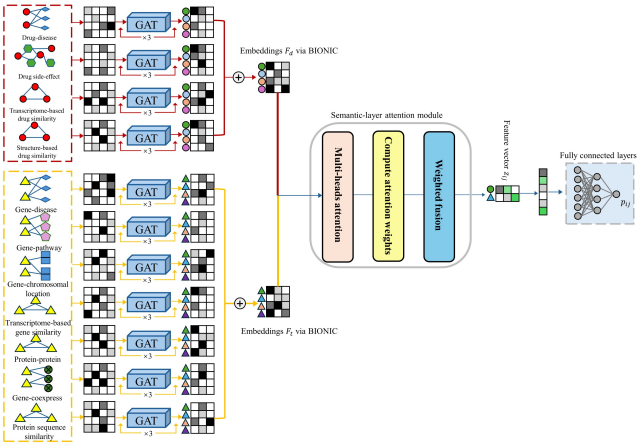


**Figure 1: MSANDTI network architecture framework**

The network consists of three key components:

(1) **Input Encoder**: Drug and target nodes are mapped to 512-dimensional embeddings $\mathbf{F}_d$ and $\mathbf{F}_t$ obtained from BIONIC.

(2) **Semantic-Layer Attention Module**: Given the drug and target representation matrices $\mathbf{F}_d, \mathbf{F}_t$, we first generate context-aware features $\mathbf{H}$ using an encoder composed of a stack of 6 Transformer layers:

$$\mathbf{H} = \text{LayerNorm}\left(\mathbf{F} + \text{Dropout}(\text{MultiHeadAtt}(\mathbf{F}))\right) \tag{2}$$

Subsequently, a semantic attention module is introduced to compute cross-network attention weights $\alpha_k^{(h)}$ using learnable projection matrices $\mathbf{W}$ and query vectors $\mathbf{q}$:

$$\alpha_k^{(h)} = \frac{exp(\phi^{(h)}(\mathbf{H}^{(k)}))}{\sum_{j=1}^{K} exp(\phi^{(h)}(\mathbf{H}^{(j)}))} \tag{3}$$

where the $h$ represents attention heads, and the $\phi^{(h)}(\cdot)$ is a bilinear transformation:

$$\phi^{(h)}(\mathbf{X}) = q^h \cdot \text{GELU}(\mathbf{W}\mathbf{X}^T) \tag{4}$$

The semantic-enhanced feature $\mathbf{H}_{fused}$ is then obtained by weighted fusion of representations from all networks:

$$\mathbf{H}_{fused} = \sum_{h=1}^{H}\sum_{k=1}^{K} \alpha_k^{(h)} \mathbf{H}^{(k)} \mathbf{W}_{proj}^{(h)} \tag{5}$$

where $\mathbf{W}_{proj}^{(h)}$ denotes the output projection matrix, ensuring dimensional consistency.

(3) **Interaction Prediction Head**: The fused representation $\mathbf{H}_{fused}$ is reshaped into a feature vector $\mathbf{z}_{ij}$ for the *drug-target pair* $(i, j)$, which is then passed through two fully connected layers (with ReLU activation and a dropout rate of 0.3), followed by a sigmoid output:

$$p_{ij} = \sigma\left(\mathbf{w}^\top \text{ReLU}(\mathbf{W}_2 \text{ReLU}(\mathbf{W}_1 \mathbf{z}_{ij})) + b\right) \tag{6}$$

where $p_{ij} \in [0, 1]$ denotes the predicted probability of interaction between drug $i$ and target $j$.

The entire MSANDTI network is trained end-to-end using binary cross-entropy loss:

$$\mathcal{L} = -\frac{1}{N} \sum_{(i,j)\in\mathcal{D}} \left[y_{ij}\log(p_{ij}) + (1 - y_{ij})\log(1 - p_{ij})\right] \tag{7}$$

where $\mathcal{D}$ is the set of all drug–target pairs, and $y_{ij} \in \{0, 1\}$ is the ground-truth label. Optimization is performed using the Adam optimizer with a learning rate of $1 \times 10^{-4}$.

## 4 Experiments

### 4.1 Datasets and Settings

Experimentally validated DTIs are integrated from DrugBank, MTA, CTD, ChEMBL, and BindingDB, with a binding affinity threshold applied to obtain 20,565 positive pairs (5,135 drugs, 2,894 targets). For more details about the dataset, see reference [16]. The dataset is randomly divided into training, validation and test sets with a 7 : 1 : 2 ratio. Evaluation is conducted under four scenarios:

- **Warm start**: Both the test drugs and targets are seen in the training set.
- **Drug cold start**: Test drugs unseen in training.
- **Target cold start**: Test targets unseen in training.
- **Double cold start**: Both drugs and targets are novel.

For the BIONIC module, we follow the original configuration: each of the three stacked GAT layers employs 10 attention heads with a hidden dimension of 68, resulting in a unified 512-dimensional embedding for each node after projection. The activation function used is LeakyReLU. For the MSANDTI core architecture, the Transformer-based encoder consists of 6 layers. The interaction prediction head comprises two fully connected layers with hidden dimensions of 1024 and 512, respectively, using ReLU activation and a dropout rate of 0.3. The final output is generated by a sigmoid function. The entire network is trained end-to-end using the Adam optimizer with a learning rate of $10^{-4}$ and a weight decay of $10^{-5}$. The batch size is set to 1024, and the model is trained for a maximum of 200 epochs with early stopping based on validation loss.

### 4.2 Baselines and Metrics

Five baselines are compared:

(1) **SVM** and **RF**, using ECFP4 drug fingerprints and AAC protein features;

(2) **DeepPurpose** [5], a deep learning framework using CNNs for molecular and sequence encoding;

(3) **DTINet** [7], which integrates heterogeneous networks via diffusion and matrix completion;

(4) **NeoDTI** [9], a GNN-based model that aggregates neighbor information from heterogeneous networks.

Evaluation metrics include AUROC, AUPRC, and F1-score, for imbalanced biomedical prediction tasks. These metrics are formally defined as follows. Let $y_{ij} \in \{0, 1\}$ denote the ground-truth label and $\hat{y}_{ij} \in [0, 1]$ the predicted interaction probability for drug–target pair $(i, j)$. By applying a threshold $\tau$, we obtain binary predictions $\tilde{y}_{ij} = \mathbb{I}(\hat{y}_{ij} \geq \tau)$, where $\mathbb{I}(\cdot)$ is the indicator function. Define:

- True Positives (TP): correctly predicted interactions,
- False Positives (FP): non-interactions incorrectly predicted as interactions,
- True Negatives (TN): correctly predicted non-interactions,
- False Negatives (FN): interactions incorrectly predicted as non-interactions.

The F1-score is the harmonic mean of precision and recall:

$$\text{F1} = 2 \cdot \frac{\text{Precision} \cdot \text{Recall}}{\text{Precision} + \text{Recall}}. \tag{8}$$

where $\text{Precision} = \frac{\text{TP}}{\text{TP}+\text{FP}}, \quad \text{Recall} = \frac{\text{TP}}{\text{TP}+\text{FN}}$.

The Area Under the Receiver Operating Characteristic curve (AUROC) measures the trade-off between True Positive Rate (TPR) and False Positive Rate (FPR) across all thresholds:

$$\text{AUROC} = \int_0^1 \text{TPR}(t)\, d\text{FPR}(t), \tag{9}$$

where $\text{TPR}(t) = \frac{\text{TP}(t)}{\text{TP}(t)+\text{FN}(t)}$ and $\text{FPR}(t) = \frac{\text{FP}(t)}{\text{FP}(t)+\text{TN}(t)}$.

The Area Under the Precision–Recall Curve (AUPRC) integrates precision with respect to recall over all thresholds:

$$\text{AUPRC} = \int_0^1 \text{Precision}(r)\, dr, \tag{10}$$

which is particularly informative under class imbalance, as in DTI prediction where positive interactions are sparse.

## 4.3 Results and Analysis

Tables 1–4 summarize the performance across all four evaluation scenarios. The best results are bolded, and the second-best results are underlined. In the warm-start setting (Table 1), MSANDTI achieves competitive results (AUROC= 0.924, AUPRC= 0.925, F1= 0.855), outperforming SVM, DeepPurpose, DTINet, and NeoDTI, but slightly underperforming compared to RF, which remains a strong baseline in feature-based DTI prediction.

**Table 1: Performance comparison in the Warm Start scenario.**

| Model | AUROC | AUPRC | F1 |
|---|---|---|---|
| SVM | 0.751 | 0.779 | 0.678 |
| RF | **0.925** | **0.937** | **0.857** |
| DeepPurpose | 0.920 | 0.919 | 0.851 |
| DTINet | 0.823 | 0.850 | 0.756 |
| NeoDTI | 0.892 | 0.887 | 0.825 |
| **MSANDTI** | <u>0.924</u> | <u>0.925</u> | <u>0.855</u> |

However, the true advantage of MSANDTI emerges in cold-start scenarios, where it achieves the best performance among all compared models. In the drug cold-start setting (Table 2), MSANDTI achieves AUROC= 0.889, AUPRC= 0.901, and F1= 0.825 outperforming the best baseline (RF) by 1.9% in AUROC and 0.7% in AUPRC. This demonstrates the ability of MSANDTI to generalize to unseen drugs by leveraging topological and semantic context from heterogeneous networks.

**Table 2: Performance comparison in the Drug Cold Start scenario .**

| Model | AUROC | AUPRC | F1 |
|---|---|---|---|
| SVM | 0.648 | 0.646 | 0.671 |
| RF | <u>0.870</u> | <u>0.894</u> | <u>0.791</u> |
| DeepPurpose | 0.846 | 0.854 | 0.775 |
| DTINet | 0.805 | 0.838 | 0.746 |
| NeoDTI | 0.839 | 0.844 | 0.775 |
| **MSANDTI** | **0.889** | **0.901** | **0.825** |

In the same challenging target cold-start scenario (Table 3), MSANDTI attains AUROC= 0.865 and F1= 0.782, surpassing DeepPurpose (AUROC= 0.835) by 3.0%. The higher F1 score indicates better balance between precision and recall—crucial for identifying true positive interactions in sparse settings.

**Table 3: Performance comparison in the Target Cold Start scenario.**

| Model | AUROC | AUPRC | F1 |
|---|---|---|---|
| SVM | 0.742 | 0.770 | 0.682 |
| RF | 0.815 | 0.849 | 0.736 |
| DeepPurpose | <u>0.835</u> | <u>0.857</u> | <u>0.759</u> |
| DTINet | 0.783 | 0.816 | 0.718 |
| NeoDTI | 0.816 | 0.828 | 0.750 |
| **MSANDTI** | **0.865** | **0.858** | **0.782** |

Most impressively, in the double cold-start scenario—where neither drugs nor targets appear in training—MSANDTI achieves AUROC= 0.851, AUPRC= 0.856, and F1= 0.781 (Table 4). This represents a dramatic improvement over all baselines: it outperforms NeoDTI by 21.2% in AUROC and DTINet by 16.7%. The high AUPRC (0.856) is particularly significant, as it reflects strong precision-recall trade-off in a setting where negative samples dominate and true interactions are rare.

These results collectively confirm that the integration of multi-scale topological features and dynamic semantic fusion enables robust generalization even when molecular features alone are insufficient. Knowledge is effectively transferred across biological entities through network connectivity and semantic relationships, making the model well-suited for real-world drug discovery pipelines involving novel compounds or understudied targets.

To validate the individual contributions of our two core modules, we conduct a series of ablation experiments under the most challenging double cold-start scenario. We compare the full MSANDTI model against the following variants:

**Table 4: Performance comparison in the Double Cold Start scenario.**

| Model | AUROC | AUPRC | F1 |
|---|---|---|---|
| SVM | 0.617 | 0.605 | 0.676 |
| RF | 0.723 | 0.746 | 0.688 |
| DeepPurpose | 0.651 | 0.666 | 0.677 |
| DTINet | 0.729 | 0.770 | 0.681 |
| NeoDTI | 0.649 | 0.666 | 0.678 |
| **MSANDTI** | **0.851** | **0.856** | **0.781** |

**Table 5: Ablation study results under the double cold-start scenario.**

| Model | AUROC | AUPRC | F1 |
|---|---|---|---|
| MSANDTI w/o Attention | 0.795 | 0.803 | 0.732 |
| MSANDTI w/o BIONIC | 0.682 | 0.691 | 0.685 |
| MSANDTI | 0.851 | 0.856 | 0.781 |

**MSANDTI w/o BIONIC**: This variant replaces the multi-scale embeddings from BIONIC with simple one-hot encodings for drugs and targets, while keeping the semantic-layer attention network intact.

**MSANDTI w/o Attention**: This variant uses the concatenated 512-dimensional embeddings from BIONIC as the direct input to the prediction head, removing the entire semantic-layer attention module.

As shown in Table 5, removing either component leads to a performance drop. The variant without BIONIC performs only slightly better than the baseline NeoDTI, confirming that the multi-scale topological features are fundamental for generalizing to unseen entities. More importantly, the variant without the attention mechanism (AUROC: 0.795, AUPRC: 0.803) suffers a substantial degradation compared to the full model (AUROC: 0.851, AUPRC: 0.856), demonstrating that the semantic-layer attention is crucial for effectively fusing heterogeneous information and capturing context-aware interactions.

## 5 Conclusion

MSANDTI is presented as a novel DTI prediction model that leverages heterogeneous graph representation learning and semantic-layer attention to address data heterogeneity and cold-start challenges. By integrating multi-scale topological features via BIONIC and dynamically fusing cross-modal semantics, MSANDTI achieves robust performance across diverse evaluation scenarios. Its strong generalization on novel drugs and targets makes it particularly suitable for real-world drug discovery applications, including drug repositioning and personalized medicine.

## Acknowledgments

This work was supported by the Medical Science and Technology Foundation of Zhejiang Province (No.2025KY1701).

## References

[1] Jie Chen, Shouzhen Chen, Junbin Gao, Zengfeng Huang, Junping Zhang, and Jian Pu. 2023. Exploiting neighbor effect: Conv-agnostic GNN framework for graphs with heterophily. *IEEE Transactions on Neural Networks and Learning Systems* 35, 10 (2023), 13383–13396.

[2] Xing Chen, Ming-Xi Liu, and Gui-Ying Yan. 2012. Drug–target interaction prediction by random walk on the heterogeneous network. *Molecular BioSystems* 8, 7 (2012), 1970–1978.

[3] Ali Ezzat, Peilin Zhao, Min Wu, Xiao-Li Li, and Chee-Keong Kwoh. 2017. Drug–Target Interaction Prediction with Graph Regularized Matrix Factorization. *IEEE/ACM Transactions on Computational Biology and Bioinformatics* 14, 3 (2017), 646–656.

[4] Daniel T Forster, Shicheng Li, Yuko Yashiroda, Makoto Yoshimura, Zhen Li, and Luis A V Isuhuaylas. 2022. BIONIC: Biological network integration using convolutions. *Nature Methods* 19, 10 (2022), 1250–1261.

[5] Kexin Huang, Tianfan Fu, Lucas M Glass, Marinka Zitnik, Cao Xiao, and Jimeng Sun. 2020. DeepPurpose: a deep learning library for drug–target interaction prediction. *Bioinformatics* 36, 22-23 (2020), 5545–5547.

[6] Jin Li, Jingru Wang, Hao Lv, Zhuoxuan Zhang, and Zaixia Wang. 2022. IMCHGAN: Inductive matrix completion with heterogeneous graph attention networks for drug–target interactions prediction. *IEEE/ACM Transactions on Computational Biology and Bioinformatics* 19, 2 (2022), 655–665.

[7] Yunan Luo, Xinbin Zhao, Jingtian Zhou, Jinglin Yang, et al. 2017. A network integration approach for drug–target interaction prediction and computational drug repositioning from heterogeneous information. *Nature Communications* 8 (2017), 1–13.

[8] Pir Masoom Shah, Huimin Zhu, Zhangli Lu, Kaili Wang, Jing Tang, and Min Li. 2025. DeepDTAGen: a multitask deep learning framework for drug-target affinity prediction and target-aware drugs generation. *Nature Communications* 16, 1 (2025), 5021.

[9] Fangping Wan, Lixiang Hong, An Xiao, Tao Jiang, and Jianyang Zeng. 2019. NeoDTI: Neural integration of neighbor information from a heterogeneous network for discovering new drug–target interactions. *Bioinformatics* 35, 1 (2019), 104–111.

[10] Wei Wang, Mengxue Yu, Bin Sun, et al. 2025. Prediction of drug-target interaction based on multiple similarity and enhanced attention mechanisms on graph convolution neural network. *Journal of Henan Normal University (Natural Science Edition)* 53, 2 (2025), 99–107. doi:10.16366/j.cnki.1000-2367.2023.06.28.0003

[11] Ming Wen, Zhimin Zhang, Shaoyu Niu, et al. 2017. Deep-learning-based drug–target interaction prediction. *Journal of Proteome Research* 16, 4 (2017), 1401–1410.

[12] Xiao-Ying Yan et al. 2016. Prediction of drug–target interaction by label propagation with mutual interaction information derived from heterogeneous network. *Molecular BioSystems* 12, 2 (2016), 520–531.

[13] Bin Yang and Yitong Wang. 2023. Representation Learning in Heterogeneous Information Network Based on Hyper Adjacency Graph. *Computer Engineering* 49, 10 (2023), 13–21.

[14] Ran Zhang, Zhanjie Wang, Xuezhi Wang, Zhen Meng, and Wenjuan Cui. 2023. MHTAN-DTI: Metapath-based hierarchical transformer and attention network for drug–target interaction prediction. *Briefings in Bioinformatics* 24, 2 (2023), bbad079.

[15] Yanping Zhang, Jianwei Ni, and Ya Gao. 2022. RF-SVM: Identification of DNA-binding proteins based on comprehensive feature representation methods and support vector machine. *Proteins: Structure, Function, and Bioinformatics* 90, 2 (2022), 395–404.

[16] Yuanyuan Zhang, Yingdong Wang, Chaoyong Wu, Lingmin Zhan, Aoyi Wang, Caiping Cheng, Jinzhong Zhao, Wuxia Zhang, Jianxin Chen, and Peng Li. 2024. Drug–target interaction prediction by integrating heterogeneous information with mutual attention network. *BMC Bioinformatics* 25, 1 (2024), 361.

[17] Tianyi Zhao, Yang Hu, Linda R Valsdottir, Tianyi Zang, and Jiajie Peng. 2021. Identifying drug–target interactions based on graph convolutional network and deep neural network. *Briefings in Bioinformatics* 22, 2 (2021), 2141–2150.

[18] Zhenjiang Zhao, Chengxin He, Yuening Qu, Huiru Zheng, Lei Duan, and Jie Zuo. 2023. MGDTI: Graph transformer with meta-learning for drug-target interaction prediction. In *2023 IEEE International Conference on Bioinformatics and Biomedicine (BIBM)*. IEEE, 801–806.

[19] Ningyu Zhong and Zhihua Du. 2025. NASNet-DTI: accurate drug–target interaction prediction using heterogeneous graphs and node adaptation. *Briefings in Bioinformatics* 26, 4 (2025), bbaf342.