Programmer's View of Computing

To program a computer:

1. Write a program in a source language (e.g. C)
2. COMPILER converts program into MACHINE CODE or ASSEMBLY LANGUAGE
3. ASSEMBLER converts program into MACHINE CODE (object code file)
4. LINKER links OBJECT CODE modules into EXECUTABLE file
5. LOADER loads EXECUTABLE code into memory to be run

Advanced issues modify simplified model:

1. Dynamic linking/loading
2. Virtual memory

Program Execution Basics (von-Neumann Architecture)

Computer executes a PROGRAM stored in MEMORY.

Basic scheme is - DO FOREVER:

1. FETCH an instruction (from memory).
2. EXECUTE the instruction.

This is the FETCH-EXECUTE cycle.

More complicated in REAL machines (e.g. interrupts).

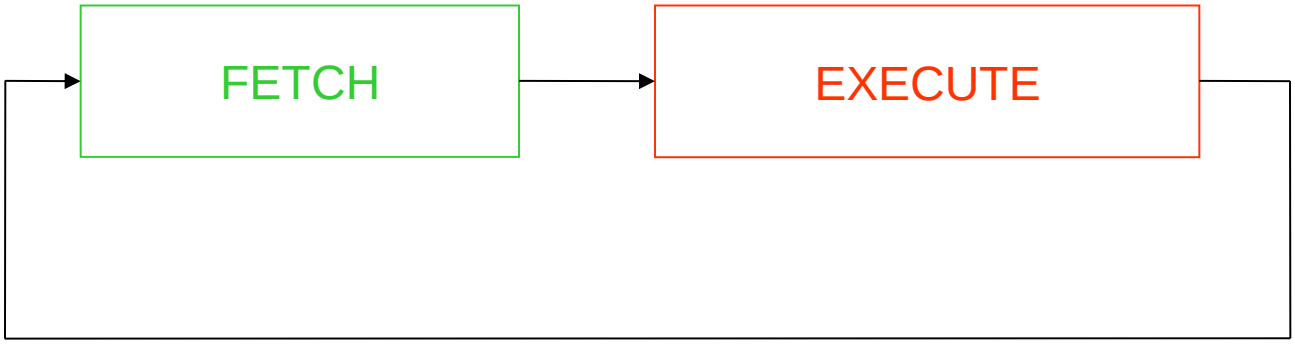

Block Diagram of a Computer

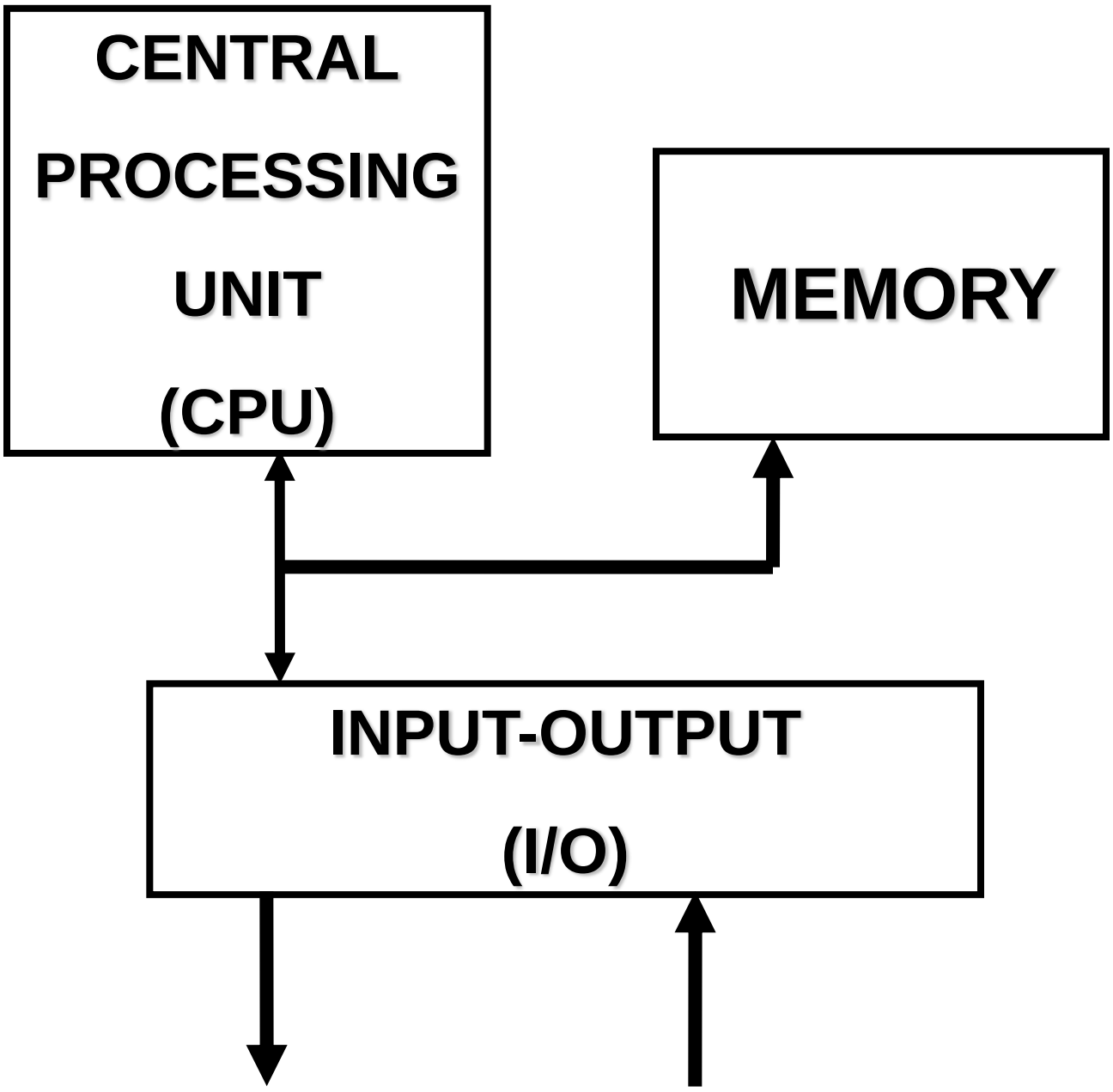

Data Representation Basics

Bit - the basic unit of information:

(true/false) or (1/0)

Byte - a sequence of (usually) 8 bits

Word - a sequence of bits addressed as a SINGLE ENTITY by the computer

(in various computers: 1, 4, 8, 9, 16, 32, 36, 60, or 64 bits per word)

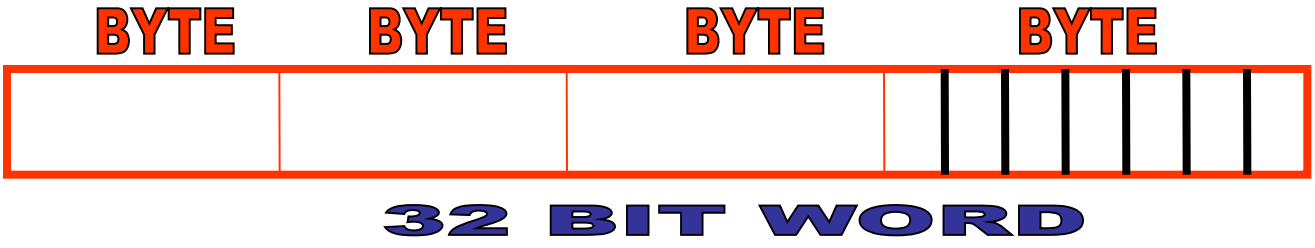

Character 6-8 bits (ASCII), 2 bytes, etc.

Instructions?

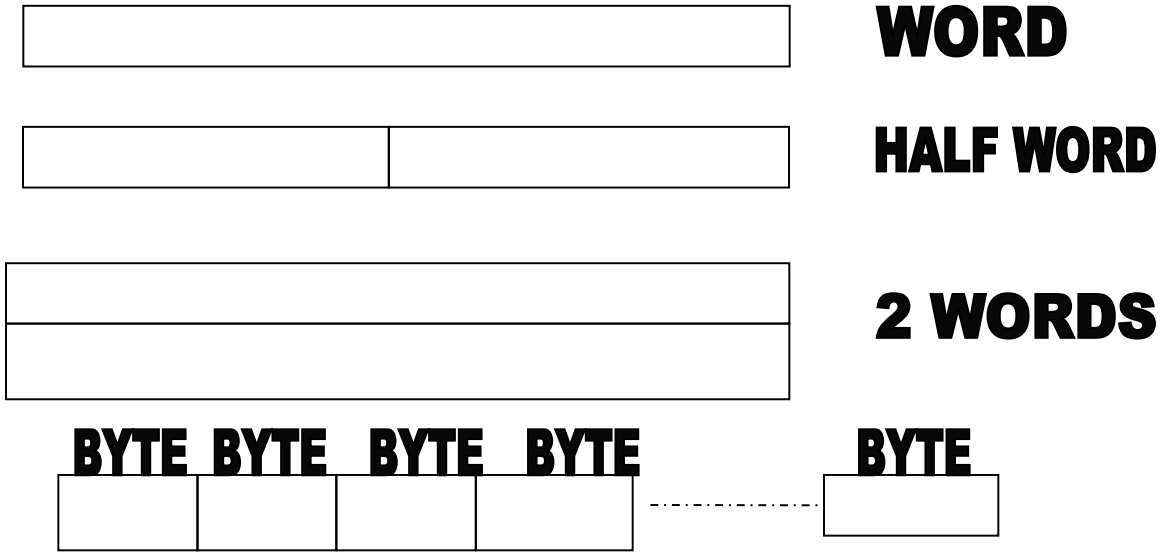

Refined Block Diagram

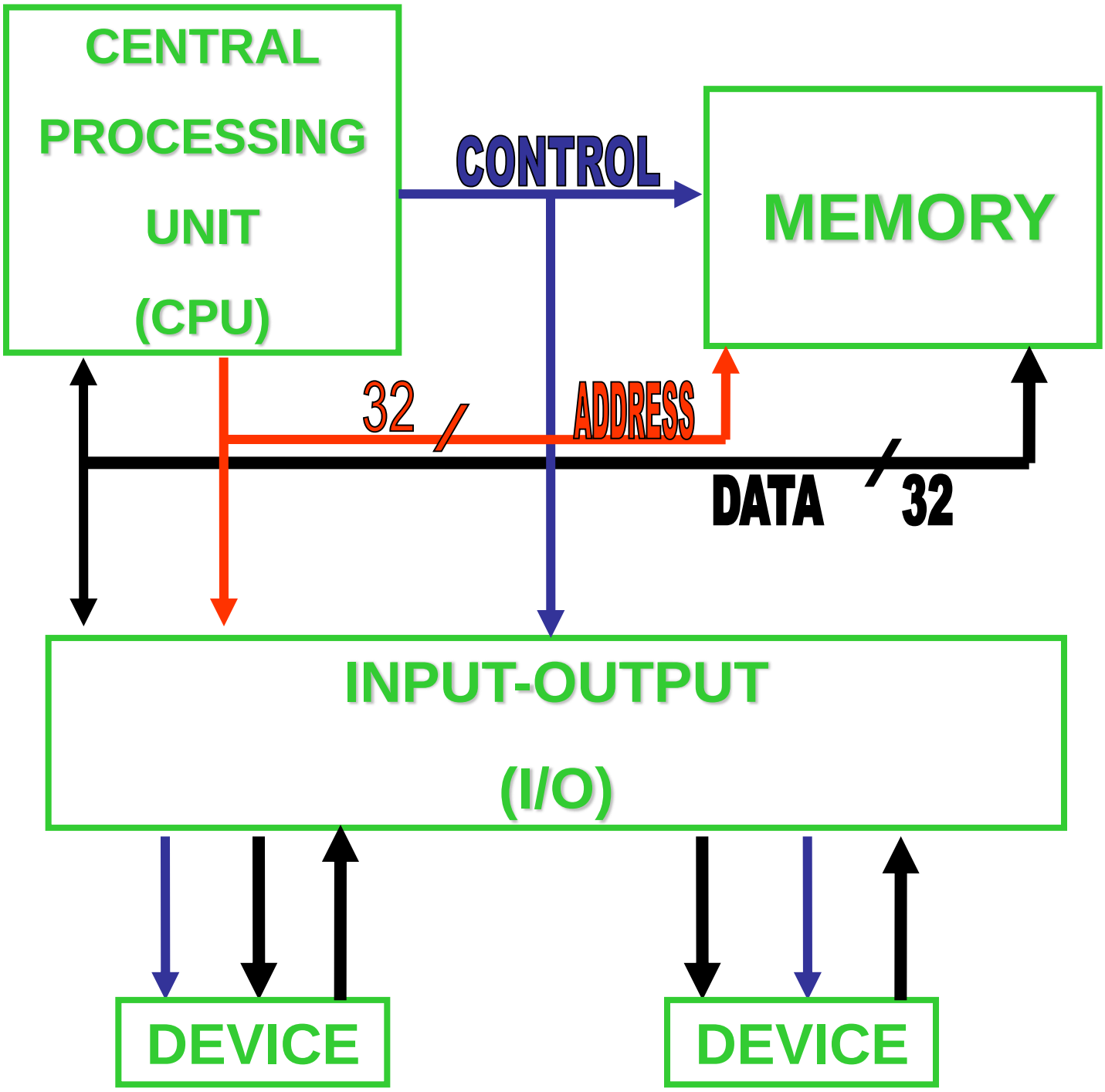

Basic Principles: Address Space

Physical (meaningful) addresses