Data Vault - Catalog of field mappings in relations

(C) Matthias Wegner, cimt ag

Creative Commons License CC BY-ND 4.0

To create a toolset for loading data into a data vault model, we need to determine the completeness of the toolset. This article investigates the different possibilites how the source fields are mapped, when multiple relations to the same hub are delivered in one row.

Example of this requirement are:

- order, referring the customer in different roles (delivery and invoice).
- flight, referring the start and destination airport

Related Document

So also Model topologies and basic field mapping variations about possible varitions of field distribution especially according one field to many columns.

Definitions

When describing the data we classify the elements as follows:

field: smallest element of source data. Will always be processed as unity. Will be stored in one or multiple columns in the data vault.

source row: the fixed structure of fields, containing the data of one or more business-objects and their relation in a single row/unit.

table/hub/sat/link: a table in the data vault model

column: a column in a table of the data vault model

business key (bk): data, used to identify business objects

dependent child key (dc): data, containing relation attributes

table key/hub key/link key: The join key of data vault model tables

content: Data that is not used for identification, and just stored in the data model

Property of the source data

Tabularized

The following approach requires the source data representation to be tabularized (all data is organized in Rows, every row contains all fields). Hierarchical data formats express some relation information throught he hierarchical structure. When getting tablularized, this must be taken into account.

Information types of data

To define the variety of mappings, it is necessary to clarify the types of information, represented by a source field.

- (Part of) the identification of an object
- Attribution or Measure of an object
- Attribution or Measure in a relation between objects

Relations are expressed in the source by containing identifications of different objects in the same row.

Note: The data vault main stereotypes map to this classification as follows. hub=object / link=relation / satellite=attribution.

2nd Note: data that is stored in dependent child key columns of a link counts also as identification, since it is needed to address attributes, that are attached by the satellite

Properties of relation data

- Relation data always must contain the business key columns of all participants.
- Data sets with multiple relations to the same object must contain multiple instances of the business key fields. It might (but must not) contain multiple instances of content data fields.

There are two *flavours* for relations in the source data.

- **Business object relation**, is the obvious flavour, covering any relation between business objects or self relation in hierarchies
- **Unit of work relation**, expresses the circumstance that multiple objects are delivered in the same data row, but without any known business relation meaning

Unit of work relations might be misread as a lack of normalization in the source data. But as the words "without any known" indicate, it might just be a lack of knowledge about a hidden meaning.

Mapping of attribute fields to key sets

When the source row contains data of multiple keys for the same object and fields with attributes or measures of that object it is necessary, to define, which set of attributes belong to wich set of keys.

The following scenarios can appear on key level:

- Distinct key fields for every set
- Some common and some distinct key fields for every set (e.g. in "multi client" applications, having the client field in every table)

On attribute level, there are these scenarios possible (most likely options listed first)

- Attribute fields only belong to one defined key set (Often the "primary" key set)
- distinct attribute fields for all or a subset of key sets
- some common and some distinct attribute fields for all or a subset of key sets
- only a single set of attribute fields, that has to be applied for all key sets

Denormalized data

When source data contains multiple fields, which target the same satellite columns without any different business keys, this might look like denormalized data and trigger the desire to normalize it into a multiactive satellite.

Data vault recommends to keep the denormalized structure in the raw vault to allow full auditability. That's why DVPD core will not support any explicit syntax that expresses denormalization in the load phase.

Model topologies

This section identifies the data vault model topologies, that have different properties regarding field mapping variations. The topologies will be used later to describe the different mapping scenarions.

Simple relations

As long, as there are no fields mapped to the same data vault column, the mapping stays simple, regardless of the complexity of the model topology. For every table there is only one set of fields, that has to be used for hashing and loading.

The following example will be used as a base to work out the possible mapping variations. It is designed to embed the most common simple models as a subset. By being capable to define this model with DVPD, the coverage of all subsets is also proven.

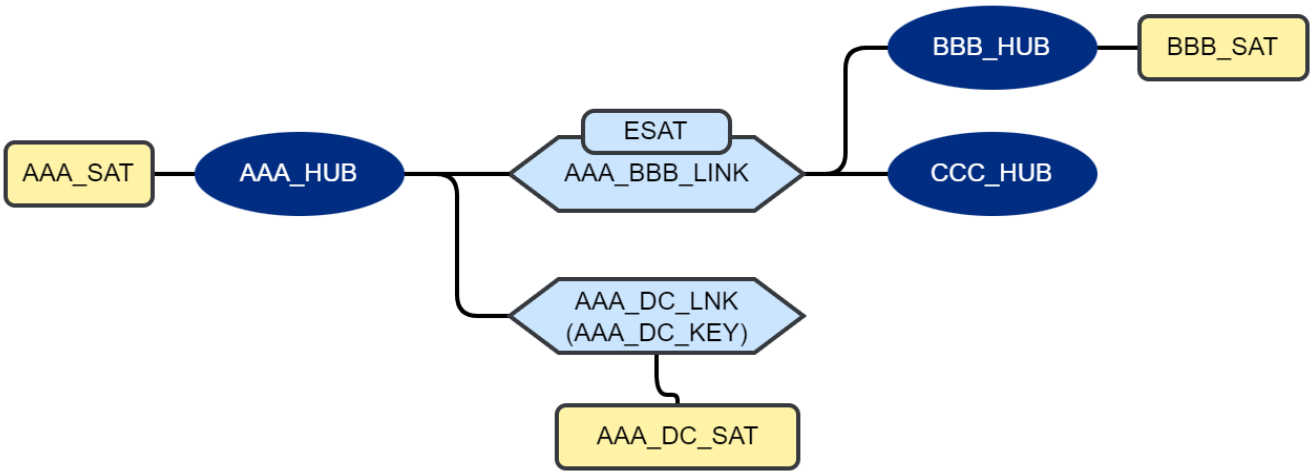

Multi relations to same hub

For sources that provide multiple relations to the same object in their data, the data vault model must provide a proper structure.
The following approaches are available to represent multiple relations

- a single link with multiple hub keys of the same hub. One for every kind of relation
- dedicated links to the hub for every kind of relation
- a single link but dedicated effectivity satellites for every kind of relation
- a single link with a dependent child key, declaring the relation type
- a single link with a multi active satellite, that contains a column to store the currenty valid relation types (really really not recommended)

These approaches can also be mixed up, which might happen on purpose or due to legacy over time.

side note: When the relation type is declared in a field in the data (not by the field structure), this "just data" from the perspective of the data vault. This kind of relation type can simply be stored in a dependent child key or a satellite of the link.

The example models in the investigation are created with 3 relations to the same hub, even though this is a rare constellation. This is necessary to prove completeness of the DVDP syntax. Only with 3 Elements or more, it is possible to create subsets with more than 1 element and less then all elements.

Satellites are omitted in the diagram for simplicity. There can be satellites on every hub and the effectivity satellites can be replaced by normal satellites.

Multiple hub keys in link to the same hub (Type-R)

This approach keeps the provided unit of work together but forces a refactoring when another relation type needs to be added (See also the discussion of the concept in chapter 4.4.4 of the Data Vault 2.0 Book of Dan Linstedt). It uses the minimal amount of tables

- The link contains a hub key for every relation type to the hub
- The hub keys must be named properly to explain the kind of relation, they represent

- Depending on the meaning, one relation might be the "main" object. This relation might use the original hub key column name from the hub. Hierarchical links are a common example for this constellation.
- To calculate the link key, all business keys for the multi referenced hub have to be assembled
- Link and Esat must be loaded once.
- The multi referenced hub needs a load operation for every reference

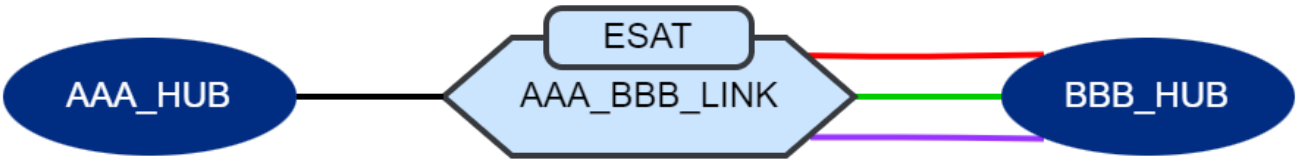

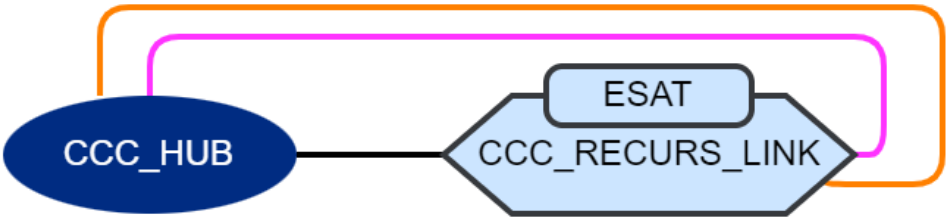

Dedicated link tables for every relation (Type-L)

This approach is extendable without any impact to existing structures but might suffer from breaking the unit of work, and creating "phantom relations".(See also the discussion of the concept in chapter 4.4.4 of the Data Vault 2.0 Book of Dan Linstedt)

- the link key calculation only uses the business key fields for their specific relation
- every link contains one hub key for each linked hub
- every Link and Esat must be loaded once.
- The multi referenced hub needs a load operation for every reference

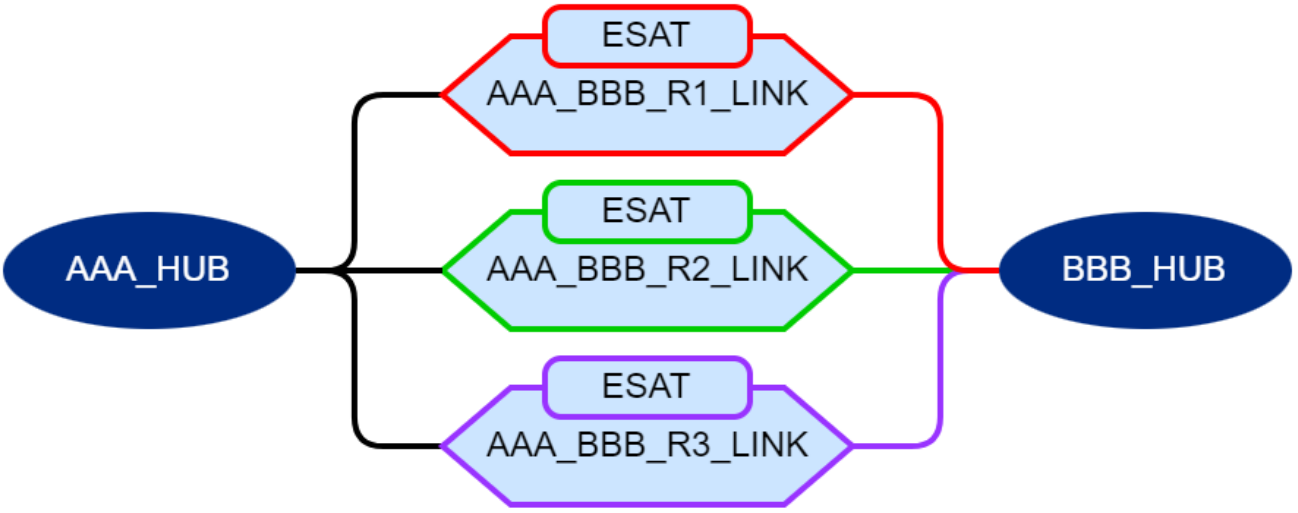

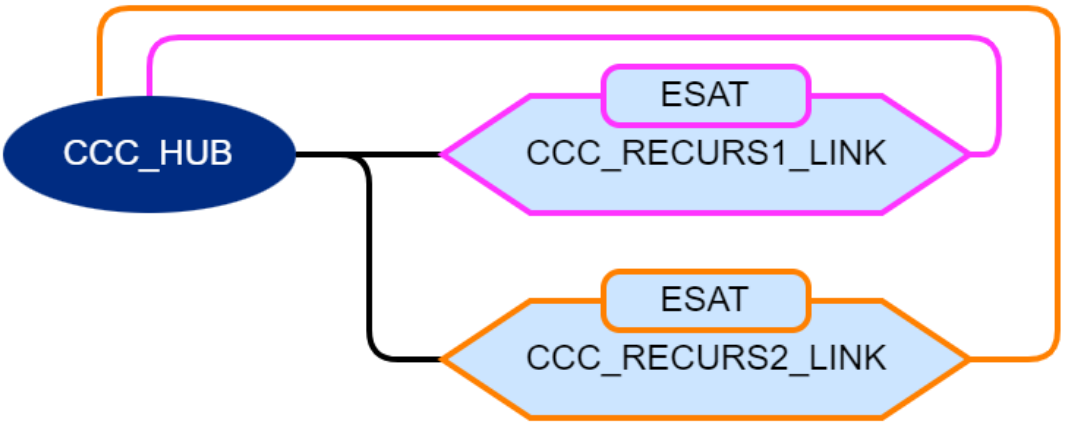

Single link table with relation specific effectivity satellites (Type-E)

This method reduced the number of link tables, without losing the flexibility of the multi link approach. It suffers from the same "phanton relation" issue as Type-L.

- the link only contains one reference to each hub but gathers data about all relations
- for every relation, there must be a separate link key calculation only using the business key fields for the specific relation
- every Esat must be loaded once
- The link and the multi referenced hub needs a load operation for every relation

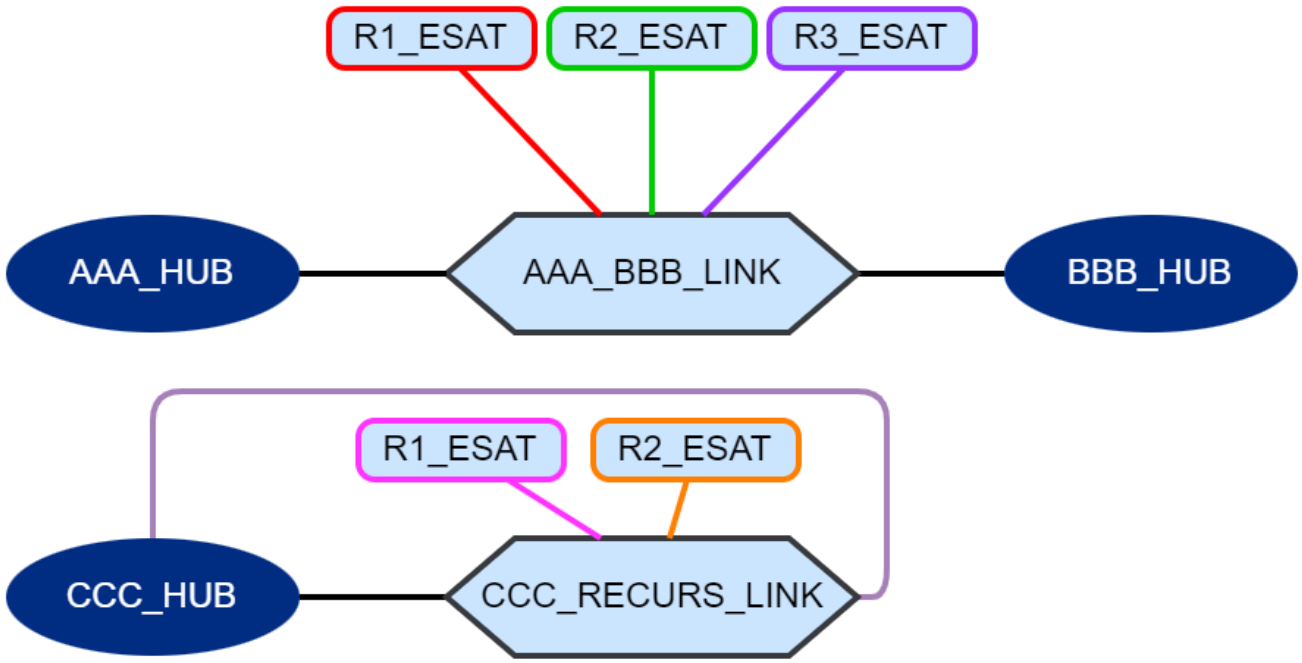

Single link table with a dependent child key declaring the relation type (Type-D)

This method uses the minimal amount of tables and allows extension of relations without any structure modification. It even can be extented without change, by just adding a new pipeline for the new relations. The downside beeing, that it hides the different kind of relations in the data, instead of communicating it through model elements.

- the link only contains one reference to each hub
- for every relation, there will be a separate link key calculation only using the business key fields for a specific relation and the relation specific value in the dependent child key
- Link, esat and the multi referenced hub need a load pass for every reference

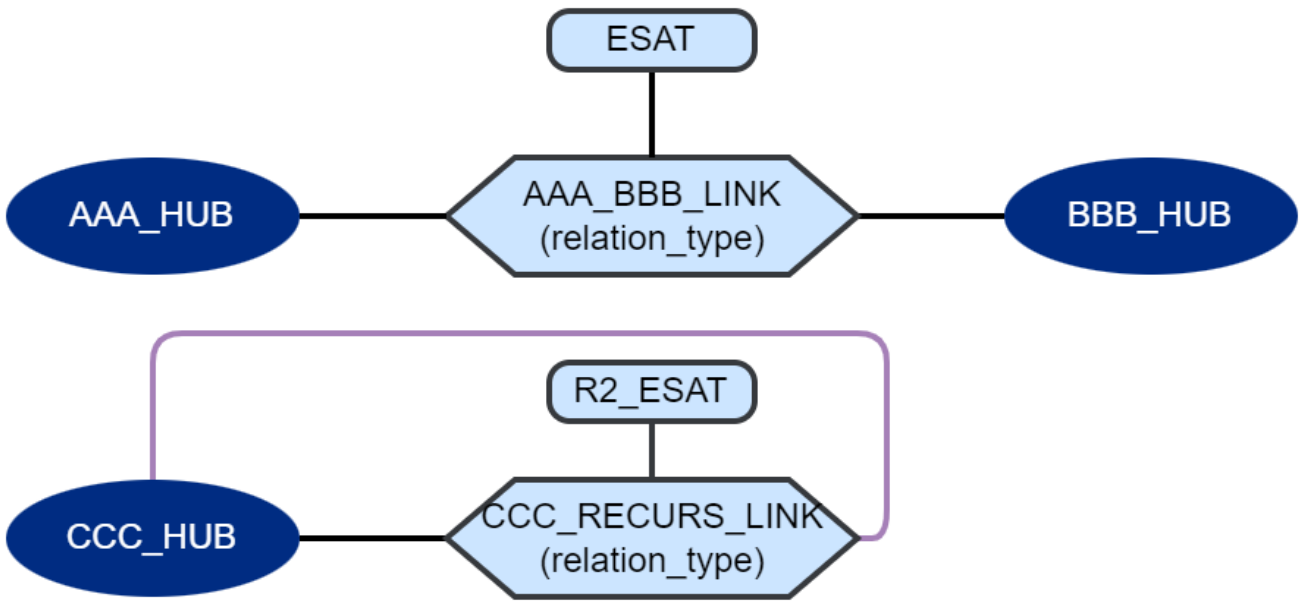

Normalize multiple relations (Type-N)

This approach omits any kind of structure to distinguish the different relations presented by the fields the same source row. This reduces the number of tables and connections to a simple model but will prevent a full reconstruction of the source dataset, since the precise field origin of the data gets lost. It is the less recommended approaches.

- the link only contains one reference to each hub
- Link, esat and the multi referenced hub need a load pass for every reference

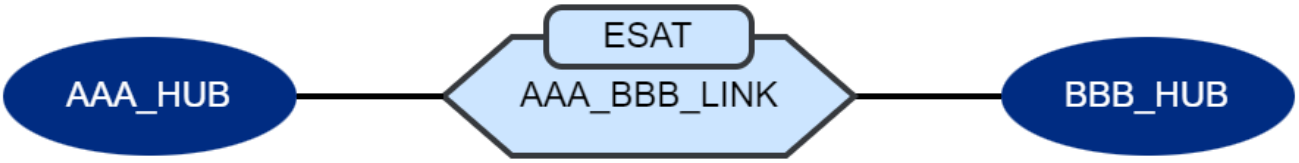

Mix of multi related link and normal link (R+L)

This model is a combinational edge case to challenge the ablities of the DVPD syntax and compiler. It might occur through model legacy.

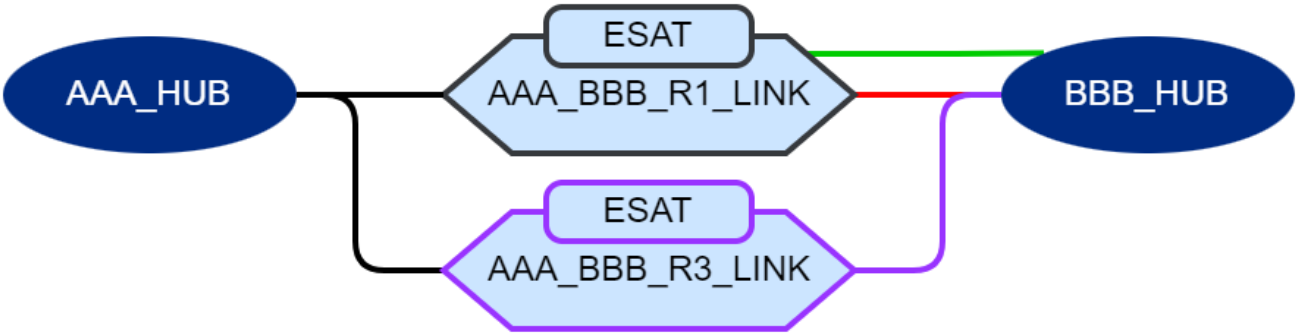

Relation specific effectivity satellites + parallel link (E+L)

This model is a combinational edge case to challange the ablities of the DVPD syntax and compiler. It might occur through model legacy.

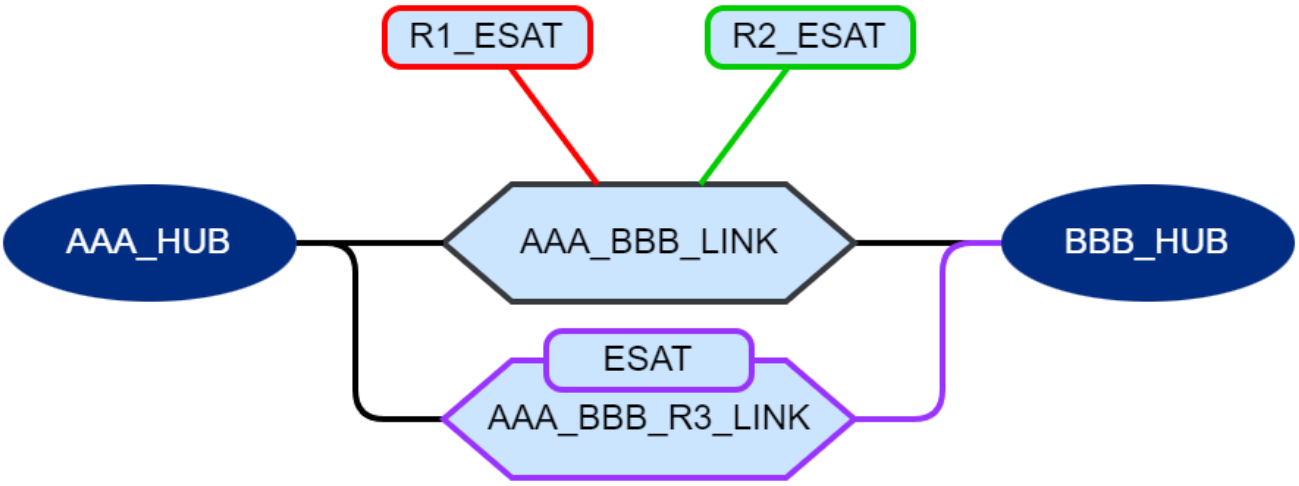

Relation specific effectivity satellites + parallel link with 3rd hub (E+3)

This model is used to create an edge case for mapping combinations of attributes needed for the BBB_HUB.

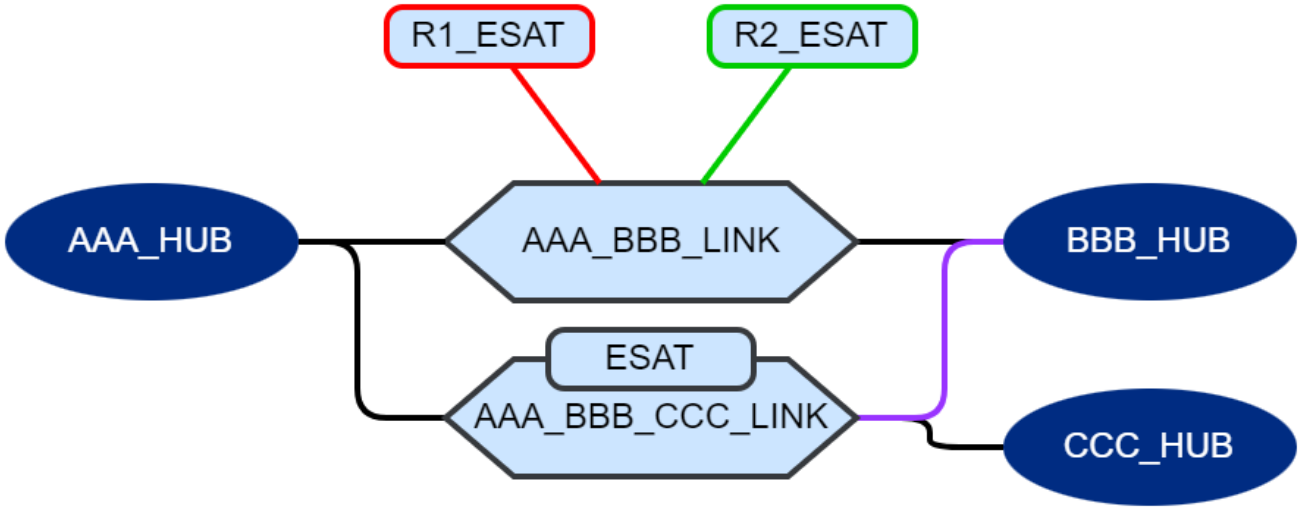

Out of scope edge cases

To keep the syntax of DVPD within a manageable complexity, some edge cases will be placed out of scope, since they are far from expected model requirements and can be solved by other designs.

Single link table with a multiactive satellite, that contains a column to store the relation type

Although completly valid for relation type information, that is contained in the data, it can't be used for relation declaraton inbetween objects of the same row, since it would need the creation of additional staging rows to feed the multiactive satellite. Creating new rows during staging has a high risk of duplicating data or generate "ghost" data, that was not in the source. Additionally the disadvantage of hiding relations in the data is the same as for the dependent child key approach.

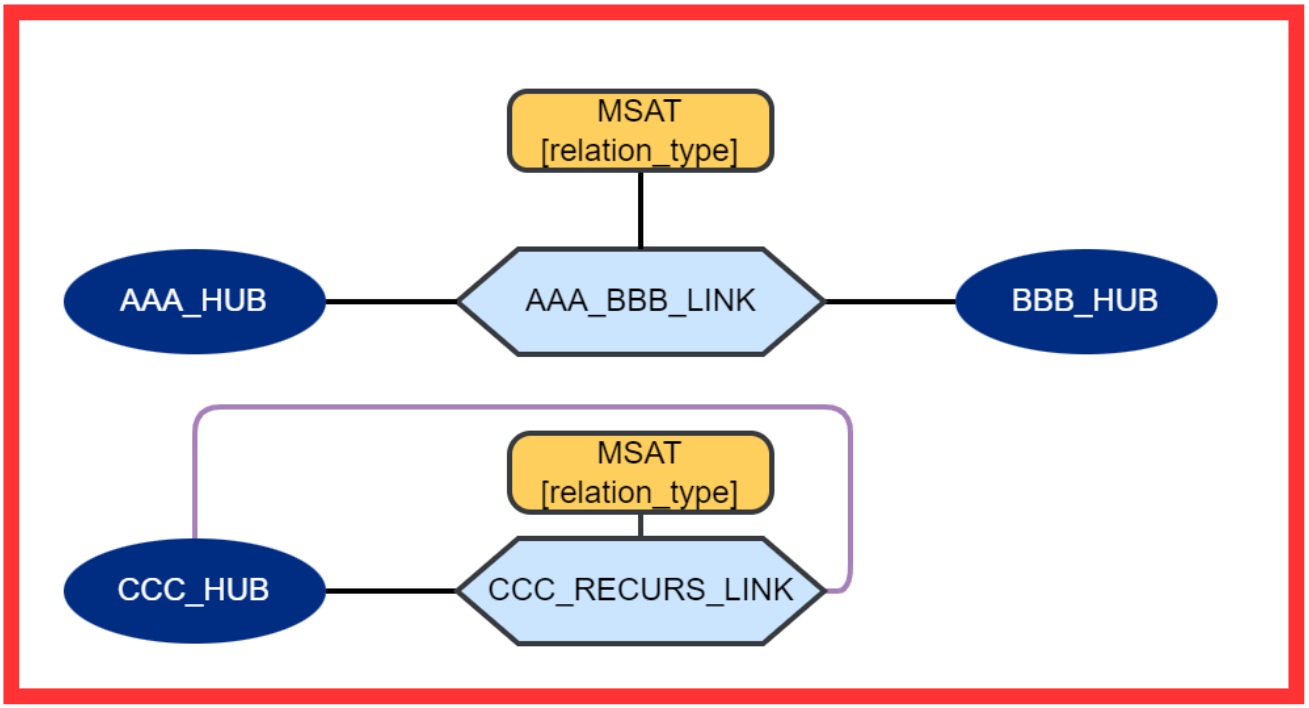

mixing esat and multi reference

Mixing different approaches at the same link is not supported. In the example two relations are expressed with two references to the hub and then are "multiplied" by two more relation types represented by esat. This makes no sense in the combination, at least not under the constraint, that we always only load a single tabularized source
data structure.

It might be an expression of the following:

- all 4 relations are a unit of work
- pairs of 2 relations are a unit of work and are modelled seperatly

The same information can be modeled either with a link, having 4 relations to the same hub, or by modelling two links, keeping the pairs.

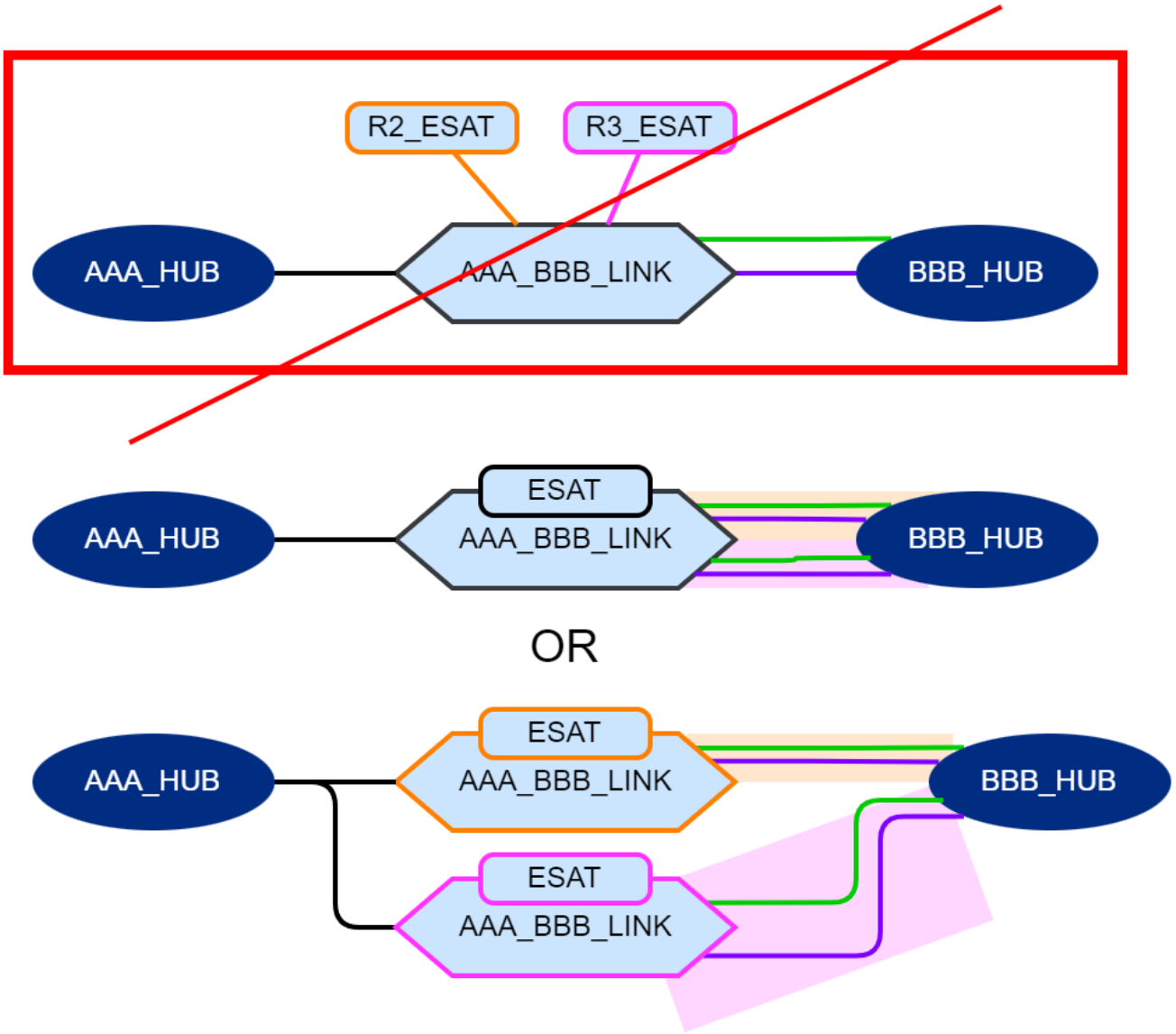

Relation participation

This chapter needs some alignment to the "keyset + link parent path differentiation". This will be done in release 0.7.0

Observerations and conclusions

1-Multiple relations are only possible with multiple sets of key fields for at lest one hub(busniess key) or link (dependent child key).
2-Relations in child tables must be supported by their parent, otherwise there would be no key to connect it
3-all tables need to be loaded for every key set declared in their field mappings
4-a link with multiple references to the same hub, needs relation specific hub key columns
5-a link with multiple references to the same hub, can only have satellites that contribute to the key sets, expressed by the link.
6-effectivity satellites need to declare the relation they track, due to the lack of a field, that would declare it
7-satellites can only contribute to relations, the link can contribute according to its parents

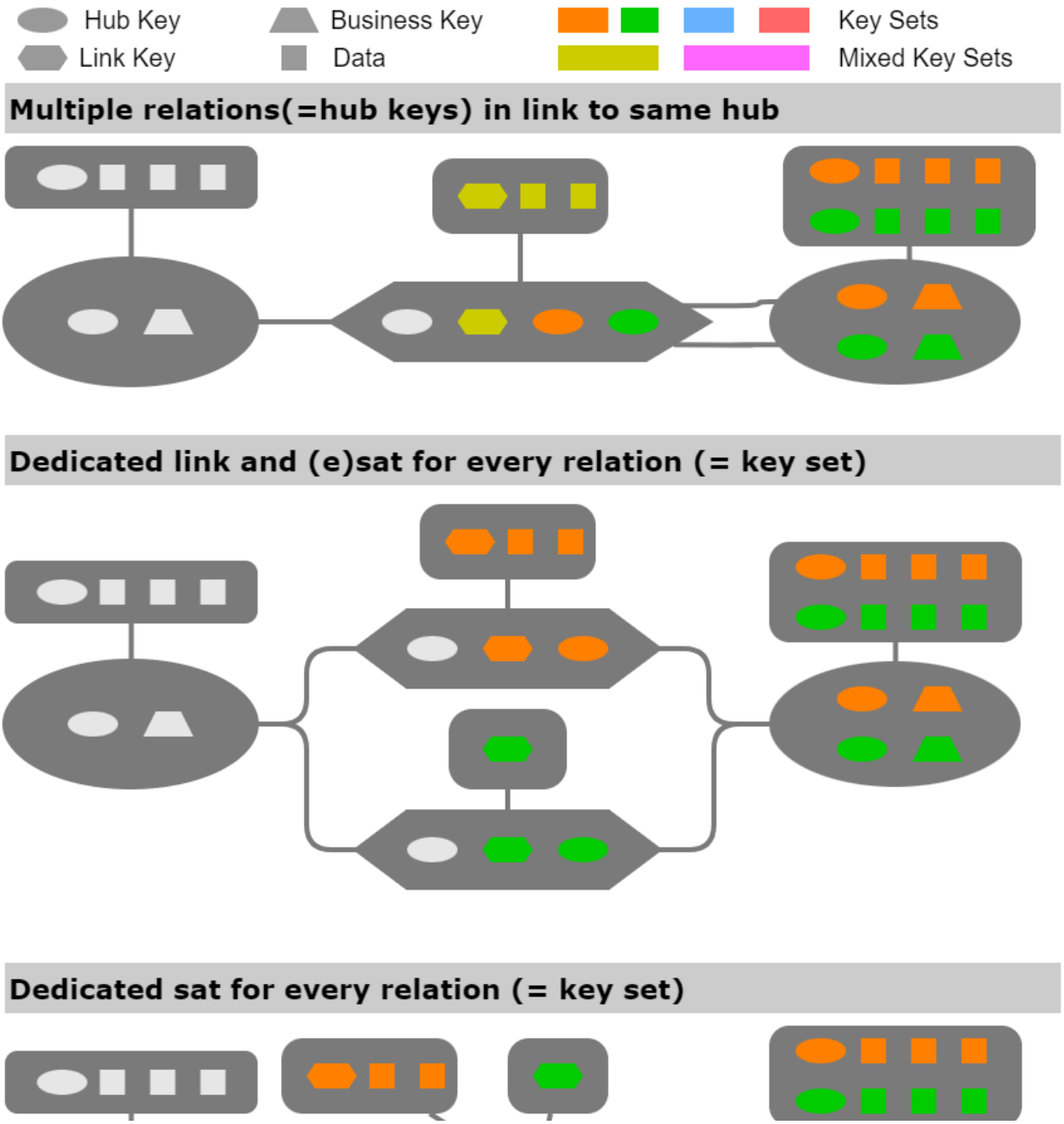

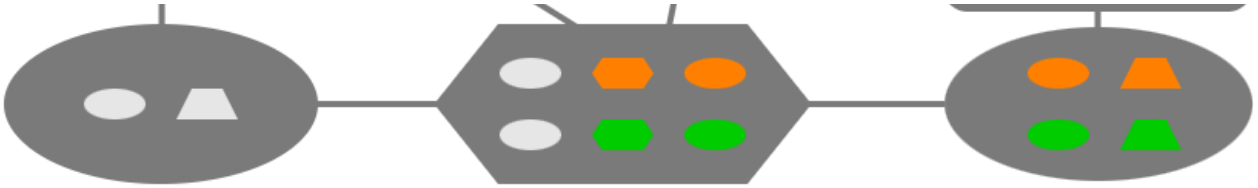

Combined modell

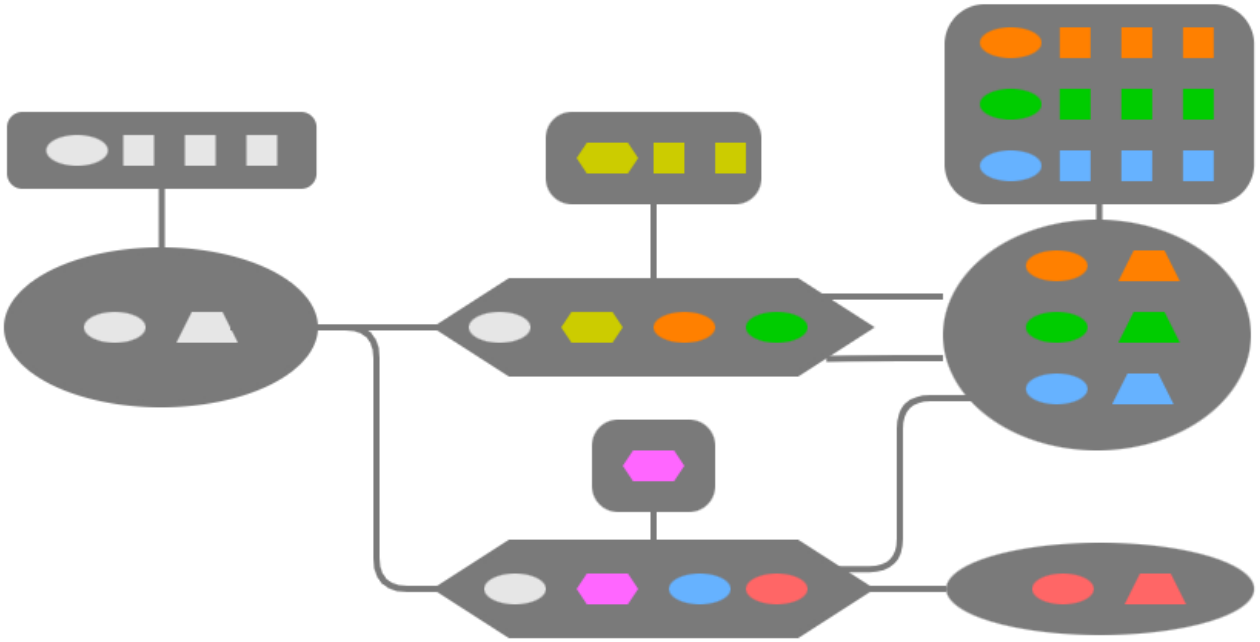

Participation of fields

When mapping fields to a multi related model, there are the following possibilites how a field will contribute or participate to the modelled relations:

- to one specific relation (+)
- a subset of specific relations (~)
- to all relations *

Depending on the function of the data, the field might be mapped to one or multiple model tables that are maybe of different stereotypes. Therefore the field can contain

- part of a business key (bk)
- a dependent child key (dc)
- part of a hubs satellite data (hs)
- part of a links satellite data (ls)

Participation to a relation is declared at every table mapping of the field. If no relatio is declared, a field is considered to be in the "unnamed" relation.

To declare the participation on a subset, that contains the "unnamed" relation and another one, the syntax provides the reserved relation name "/" for the unnamed relation.

A mapping to all relations of the satellite (or parent) con be declared by using "*" as relation name.

A target column must only have one field mapped in every specific relation.

Participation of hubs

Hubs participate in all relations that contain a full set of fields mapped to the columns of the hub.

- The full set of columns is determined by the mapping of a relation with the most columns.
- relations with different or incomplete column outcome will fail the consistency check

These rules include the "simple case" (only single relations), since fields without any relation declaration belong to the "main" (unnamed) relation .

If a hub **only** participates in the "main" unnamed relation, it supports

- "main" relations from links
- induced relation of links

Participation of links with explicit relation mapping

These links have at least one explicit relation declaration in their parent mapping.

- they participate only in the relations that are represented by the connections
- the hubs targeted with an explicitly named relation must also have mappings for the same relation
- if a hub is referenced more then once, the hub key names in the link must be adapted
    - hub column names for the main (unnamed) reference should copy the hub key column name of the hub
    - hub column names names for the named references must be declared or will be generated by a hard rule (mostly the concatenation of targeted hub key name and relation name)
- Undeclared relations in the link belong to a "main" relation, so theses hubs must participate to the main (unnamed) or the universal relation
- Satellites on these kind of link are not allowed to declare an explicit relation, except the "main" relation

Participation of induced relation links

These links have no explicit relation declaration to a hub (and therefore only one reference column for every hub).

- these links participate in all relations that are
    - declared at the mapping of their dependent child keys
    - declared at their satellites
    - If neither satellites nor dependent child key mappings declare an explicit relation, links belong to all relations, that are common in all connected hubs.
- each relation the link contributes to, must supported by all connected hubs and must be known explicitily by at least one connecting hub

This also covers the simple common model use case, since without declaration a sattelite contributes to the main (unnamed) relation wich will place the link also in the main relation.

Participation of satellites

Satellites contribute to all relations that are declared by their incomping field mappings. Without any declaration the mappings are used for the "unnamed" mapping only.

Mappings can be declared to be fully generic regarding the relation by setting the relation name to '*'. If all mappings are declared to be generic the satellite will follow all relations of its parent.

- The set of columns for a satellite is dermined by all mappings, regardless of the annotated relation
- All announced relations must have a mapping for every columns
- relations with different column outcome will fail the consistency check
- all relations a satellite contributes to, must be supported by the parent

Participation of effectivity satellites

Unless a tracked relation name is declared, effectivity satellites contribute all relations of the link, as long as it is only one.

When the link has multiple relations, this might be the result of an unintended relation induction through the hubs of the link. Therefore the situation must be clarified by declaring an explicit relation, the satellite will track or explicitly allow the satellite to follow all relations by setting the tracked relation '*'.

- the relation an effectivity satellite is tracking, in must be known by the parent link

Procedure to generate relation specific load operations

Every table must be loaded by one or more loading operations. The field combination, of every load operation varies for every relation, the table is loaded for. Every load operation for a table is dedicated to specific relations, the table is involved in.

Deduce load operations

This chapter will get some rewriting, when the "keyset + link parent path differentiation" is added in release 0.7.0

- Every table must have a load operation, for every set of keys (every kind of hash key assembly) it participating in.
- Every field mapping to a table must belong to one or many set of keys

Step 1 - Determine field mapping restrictions

- field mappings, without a relation name are set to belong to the unnamed relation `/`
- field mappings, with relaion_names =["*"] do not define a relation, but will participate in any relation
- a hub table with only "*" field mappings is not valid

Step 2 - Determine load operation from explicit field relation

- a table will have an operation for every mapping relation, except "*" relation (this includes the unnamed relation `/`, even when it is not declared)
- a hub, with only an unnamed relation "/" operation, that has not been induced by any field, sets the load operation name to "*" (universal)
- compiler check: For every load operation there must be a valid mapping for all columns (either by relation name or "*") Result:
- All field mappings are defined
- Hub tables will have all load operations defined
- sat tables will have load operations defined
- link tables will have load operations, that are the result of explicit mappings
- Completeness of the mappings is checked

Step 3 - Determine operation for links with explict parent mappings

This only applies to links with at least one explicit relation declaration in the parent hub mapping:

- Compiler check: The link must not already have a load operation, that was deduced in previous steps (This Restricion will be removed in 0.7.x)
- The link will have an "explicit relation" load operation `+`
- Table relations without an explicit relation name are defined to be the unnamed relation `/`
- Compiler check: The relation of the parent connections must be supported by the operations(= field mappings) of the connected hubs Result:
- links with explicit relations in the hub mapping are tagged with the `+` load operation
- The relation names in the hub relations are checked

Step 4 - Determine operation from tracked relations of effecitivity satellite

This only applies to effectivity satellites

- Compiler check: When the parent link is tagged with the `+` load operation, the declaration of a tracked relation is not allowed
- If a tracked relation is declared, it will be the only load operation Result:
- effectivtiy satellites with legal tracked relation declaration are tagged with the relation specific load operation

Step 5 - Satellite to Link operation deduction

Must be applied to all links, that have no operation yet Links that already have operations are driven by the satellites or by their own relation declartions.

- get all load operations from load operations of its children
- compiler check: The load operation must be explicitly supported by at least one parent hub
- compiler check: The load operation must be supported by all parent hubs, either explicitly or due to the hubs `*` operation Result:
- compiler check: In case multiple operations have been induced by the parent hubs, none of the hubs must have an "universal" relation

Step 6 - Hub to Link deduction

Must be applied to all links, that have no operation yet:

- determine the load operations, that all parent hubs have in common
- Should the result only be `*` , set the load operation of the link to be `/`

Step 7 - Parent to Satellite deduction

Must be applied to all satellites, that have no operation yet

- Add all operations of the parent
- Allow usage of multiple relations from the parent only when satellite ist tracking '*' relation or has only '*' mappings Result:
- every table should now have its appropriate list of load operations

Step 8 - Final check

- compiler crosscheck: all tables must have at least one load operation. Single `\*` or one or more relation names

Rules for the field assembly for every load operation

Hub load operation

- the relation to load is defined by the load operation
- for all columns, where possible: use the field mappings, that match the relation of the operation and the "*" mapping as fallback
- for the hub key: use the columns as mapped above
- In the stage table this will result in a hub key column for every load operation

link load operation with explicit parent hub relations

This only applies to links `+` load operation

- determine the relation from the hub key mapping for every hub key
- use the relation specific business key field mappings of the parents to calculate link key (`/` is solved by `*` in the hub, when missing)
- use the relation specific hub key calculation of the parents(`/` is solved by `*` in the hub, when missing)

- dependent child keys will not be relation specific and can be mapped directly (this will change in 0.7.x)
- In the stage table this will result one link key column

link load operation without explicit parent hub relations

This only applies to link load operations that are not `+`

- the relation to load is defined by the load operation
- use the relation specific business key field mappings of the parents to calculate link key (`/` is solved by `*` in the hub, when missing)
- use the relation specific hub key calculation of the parents(`/` is solved by `*` in the hub, when missing)
- dependent child keys must be mapped relation specific, with default mappings as fallback
- In the stage table this will result link key columns for every load operation

Satellite load operation

- the relation to load is defined by the load operation
- for all columns, where possible: use the field mappings, that match the relation of the operationm else use the default mapping
- in the stage table, this will result in a diff hash for every field mapping variation
- use the relation specific hub or link key calculation from the parent

Catalog of field mappings

This chapter will get some rewriting, when the "keyset + link parent path differentiation" is added in release 0.7.0

To setup a test suite for all combinations of topologies and field mappings, the follwing will provide a notation description method and a table of combinations

- **Model**: Short notation of the model topology by specifying the links as list of the connected (single letter A-D) hub name. Every hub is preceeded by the number of connections from the link to the hub, when the number is greater then 1. The name of the ends with the relation model approach
  <multiplicity><Hub>[<multiplicity><hub>]...<approach (indicated by [R,L,E,D,S])> + ...
  (multiplicity is only provided when greater then 1)
  - A2BE = Link from A to B with 2 refernces to B, modeled as effectivity satellites
  - 3AR = Link with 3 connections to A (one origin and two recursive relations)
  - AB3CR+ABC = Link from A to B and C with 3 references to C + Link to A,B,C
  - A3BL = 3 separate Links with esats from A to B
- **overlap scenario**: Describes how wide a specific kind of data (key, sat data) is spread over the model and relations.
  <content type (bk,dc,hs,ls)><number of tables it is mapped to> <relation participation (+,~,*,-,%)>[&]
  with BK relation paritipation + = one, ~ more then one but not all, * all
  with HS relation paritipation + = one for every BK relation, - only for one bk relation, ~ multiple but not all relations, for all bk relations, % more then one but not for all bk relations, * all relations

- BK1+ = Business key in one table used for one relation
- BK2* & BK1+ & HS1+ = Business key in 2 tables for all relations & business key in one table single relation & hub satellite content in 1 table and different in every bk relation
- BK1~ & LS1~ = Business key in 1 table for a subset of relations and link satellite content in more than one but not all relations
- BK1+ & hs1- = Business key in 1 table and hub satellite processed only in 1 relation
- BK1+ & hs1% = Business key in 1 table and hub satellite processed only in subset of relatiions

- **Test**: Number of the test case, that will cover this setting (set *italic* when not implemented yet, set to "-" when this combination is not possible)

Generic case matrix

The generic cases all use a 1:1 field distribution. Every field is mapped to only one target column but might participate in multiple relations.

Model	A3BR	A3BL	A3BE	A3BD	3AR	A3BN
overlap scenario						
BK1+	*201*	*301*	*401*	*501*	*601*	**101**
BK1~	*202*	*302*	*402*	*502*	-	**102**
BK1*	*203*	*303*	*403*	*503*	*603*	**103**
BK2+	*211*	*311*	*411*	*511*	-	**111**
BK2~	*212*	*312*	*412*	*512*	-	**112**
BK2*	*213*	*313*	*413*	*513*	-	**113**
BK2* & BK1+	*215*	*315*	*415*	*515*	-	*115*
BK2* & BK1~	*216*	*316*	*416*	*516*	-	*116*
BK2* & BK1*	*217*	*317*	*417*	*517*	-	*117*
BK1+ & HS++	**220**	*320*	*420*	*520*	*620*	*120**
BK1+ & HS~+	*221*	*321*	*421*	*521*	-	*121*
BK1+ & HS~~	**222**	*322*	*422*	*522*	**622**	*122**
BK1+ & HS*+	*223*	*323*	*423*	*523*	*623*	*123*
BK1+ & HS*~	*224*	*324*	*424*	*524*	-	*124*
BK1+ & HS**	*225*	*325*	*425*	*525*	*625*	*125*
BK1~ & HS++	*226*	*326*	*426*	*526*	*626*	*126*
BK1~ & HS~+	**227**	**327**	**427**	**527**	-	*127**

Model	A3BR	A3BL	A3BE	A3BD	3AR	A3BN
BK1~ & HS~~	*228*	*328*	*428*	*528*	-	*128*
BK1~ & HS*+	*229*	*329*	*429*	*529*	*629*	*129*
BK1~ & HS*~	*230*	*330*	*430*	*530*	-	*130*
BK1~ & HS**	*231*	*331*	*431*	*531*	*631*	*131*
BK1* & HS++	*232*	*332*	*432*	*532*	*632*	*132*
BK1* & HS~+	*233*	*333*	*433*	*533*	-	*133*
BK1* & HS~~	*234*	*334*	*434*	*534*	-	*134*
BK1* & HS*+	*235*	*335*	*435*	*535*	*635*	*135*
BK1* & HS*~	*236*	*336*	*436*	*536*	-	*136*
BK1* & HS**	*237*	*337*	*437*	*537*	*637*	*137*
BK1+ & LS1+	-	*341*	*441*	*541*	*641*	-
BK1+ & LS1~	-	*342*	*442*	*542*	-	-
BK1+ & LS1*	*243*	*343*	*443*	*543*	*643*	*143*
BK1~ & LS1+	-	*344*	*444*	*544*	-	-
BK1~ & LS1~	-	*345*	*445*	*545*	-	-
BK1~ & LS1*	*246*	*346*	*446*	*546*	-	*146*
BK1* & LS1+	-	*347*	*447*	*547*	*647*	-
BK1* & LS1~	-	*348*	*448*	*548*	-	-
BK1* & LS1*	*249*	*349*	*449*	*549*	*649*	*149*
BK1+ & HS--	*281*	*381*	*481*	*581*	-	*181*
BK1+ & HS%%	**282**	*382*	**482**	*582*	-	*182**
BK1+ & HS*%	*283*	*383*	*483*	*583*	-	*183*
BK1~ & HS--	*284*	*384*	*484*	*584*	-	*184*
BK1~ & HS%%	**285**	*385*	**485**	*585*	-	*185**
BK1~ & HS*%	*286*	*386*	*486*	*586*	-	*186*
BK1* & HS--	*284*	*384*	*484*	*584*	-	*184*
BK1* & HS%%	*285*	*385*	*485*	*585*	-	*185*
BK1* & HS*%	*286*	*386*	*486*	*586*	-	*186*

Designed cases (700-999)

Designed cases are created to test common and edge cases. They use the previous notation to describe the modell, but a more explicit way to express the field distribution.

- **field distribution**: Comma separated list of the incoming fields, indicating their distribution. <letters of target tables>[:<letters of relations>]
  - Business key in a hub: capital Letters from A to D
  - Data column in a satellite of a hub: lower case letter of the hub
  - Dependent child key: Capital Letters of the link in square brackets
  - Data column in a satellite of a link: lower case letter in square brackets
  - Relations declaration is uses small letters from T to W separated from the table after a colon
  - A,a,B,b = 4 Fields, each mapped to one of the tables (Hub A, Sat of Hub A, Hub B, Sat of Hub B)
  - AB,A,B,a,b,[ab] = 1 Feld used in Hub A and B, all other are separated. "[ab]"= Satellite on the Link of A and B.
  - ABC,A,B:t,B:u,C,a = 1 Field used in all hubs (ABC), 1 field exclusively in A hub, 1 field for B hub in relation t, one field for b hub in relation u, one field for C hub, one field in Sattelite of A hub.

Model	field distribution	test
ABC	ABC,A,B,C,a,b,c	**701**
A2BCR	ABC,A,B:t,B:u,C,a,b,c	**702**
ABCL+ABL	ABC,A,B:t,B:u,C,a,b,c	**703**
A2BR+ACL	ABC,A,B:t,B:u,C,a,b,c	**704**

More combinatorical exampes

The vastness of combinatorical possibilites is also explored in the test cases, described in:

- Process generation rules
- Process generation rule violations