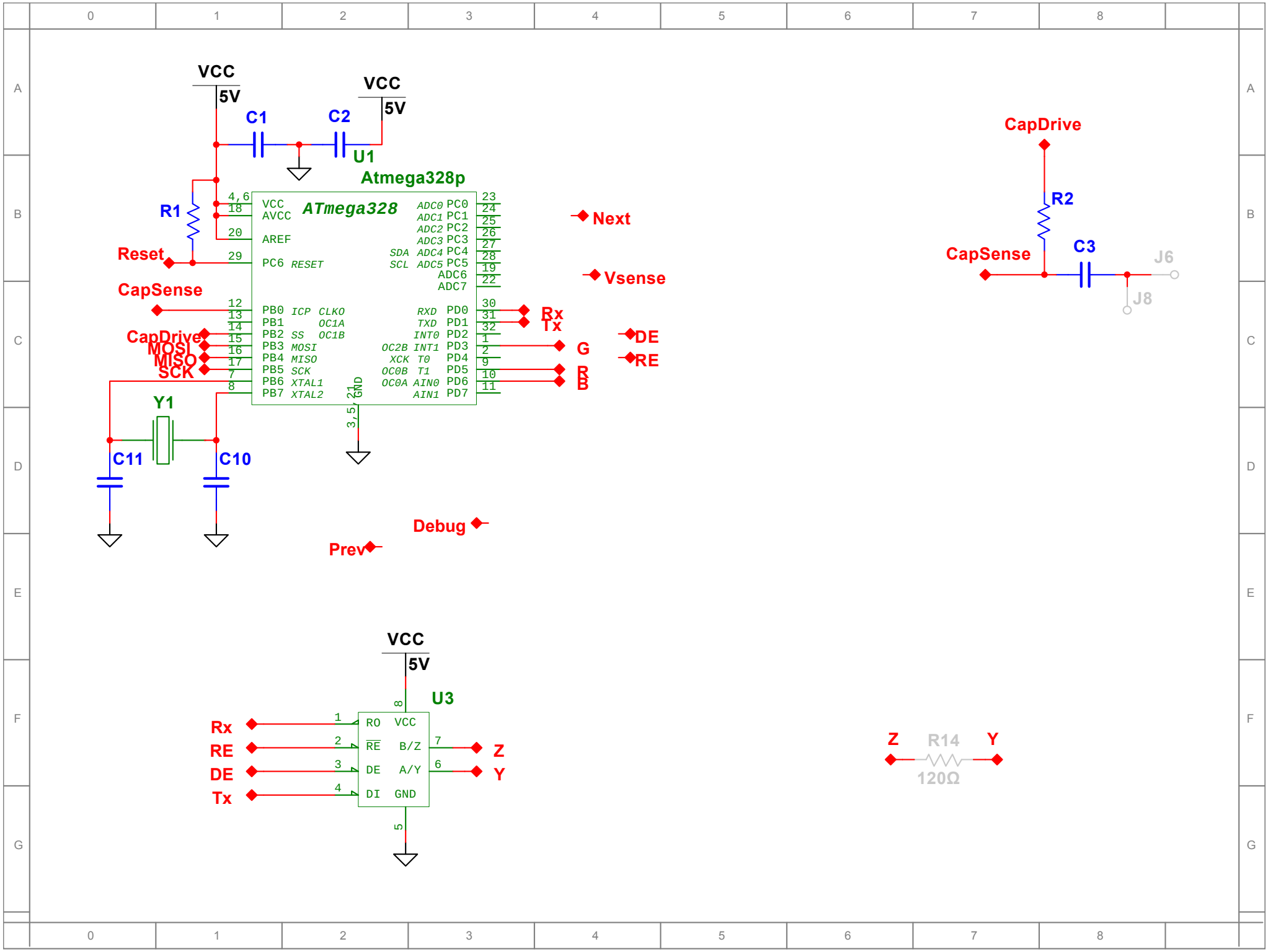
VCC
5V
C1
C2
U1
Atmega328p
R1
Reset
CapSense
CapDrive
MOSI
MISO
SCK
Y1
C11
C10
ATmega328
VCC
AVCC
AREF
PC6 RESET
PB0 ICP CLKO
PB1 OC1A
PB2 SS OC1B
PB3 MOSI
PB4 MISO
PB5 SCK
PB6 XTAL1
PB7 XTAL2
GND
ADC0 PC0
ADC1 PC1
ADC2 PC2
ADC3 PC3
SDA ADC4 PC4
SCL ADC5 PC5
ADC6
ADC7
RXD PD0
TXD PD1
INT0 PD2
OC2B INT1 PD3
XCK T0 PD4
OC0B T1 PD5
OC0A AIN0 PD6
AIN1 PD7
Next
Vsense
Rx
Tx
G
R
B
DE
RE
Debug
Prev
CapDrive
R2
CapSense
C3
J6
J8
VCC
5V
U3
Rx
RE
DE
Tx
RO VCC
RE B/Z
DE A/Y
DI GND
Z
Y
Z
R14
Y
120Ω

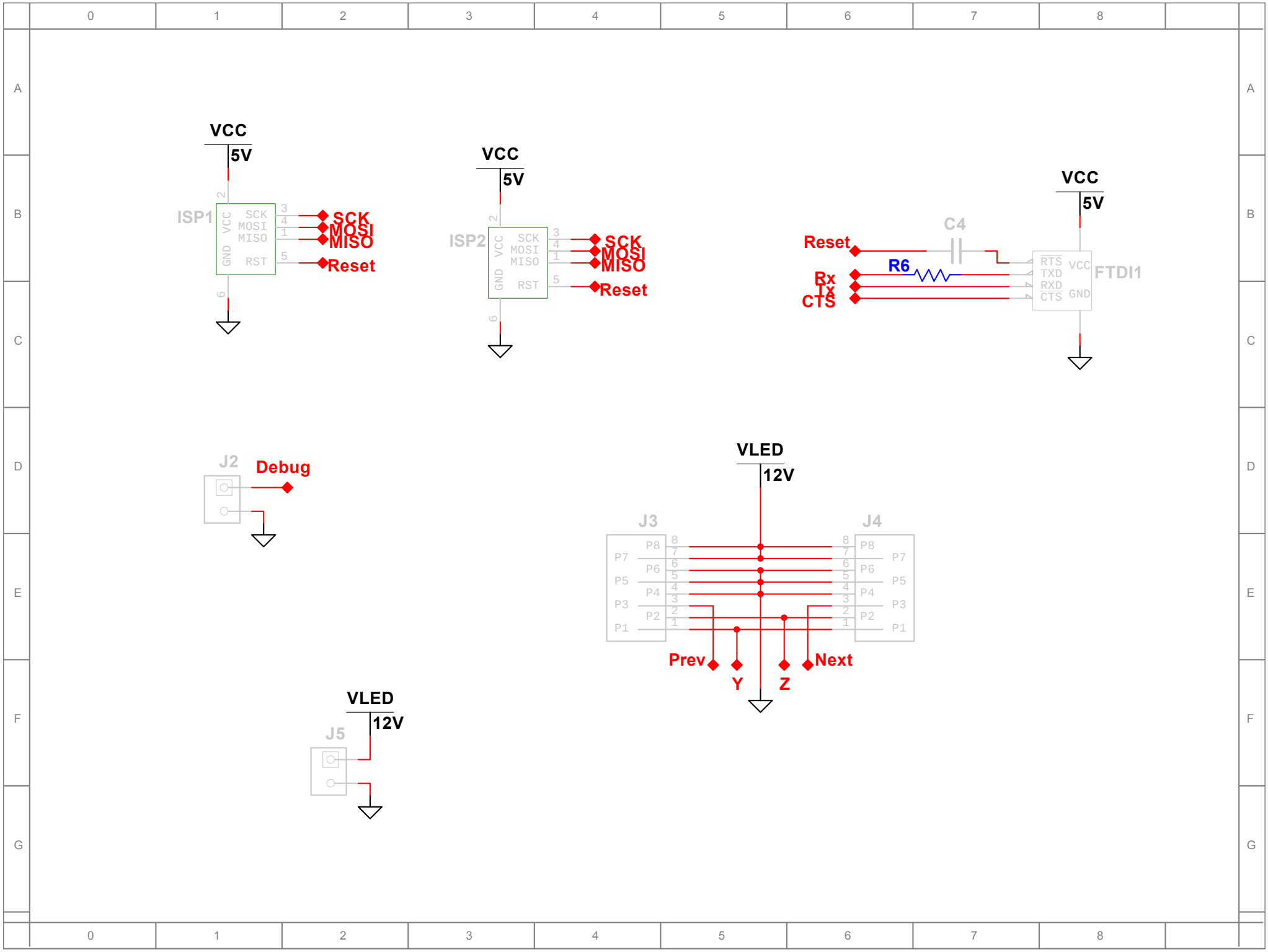
VCC
5V
ISP1
VCC
GND
SCK
MOSI
MISO
RST
SCK
MOSI
MISO
Reset
VCC
5V
ISP2
VCC
GND
SCK
MOSI
MISO
RST
SCK
MOSI
MISO
Reset
VCC
5V
C4
Reset
R6
Rx
Tx
CTS
RTS
TXD
RXD
CTS
VCC
GND
FTDI1
J2
Debug
VLED
12V
J3
J4
P8
P7
P6
P5
P4
P3
P2
P1
Prev
Y
Z
Next
VLED
12V
J5

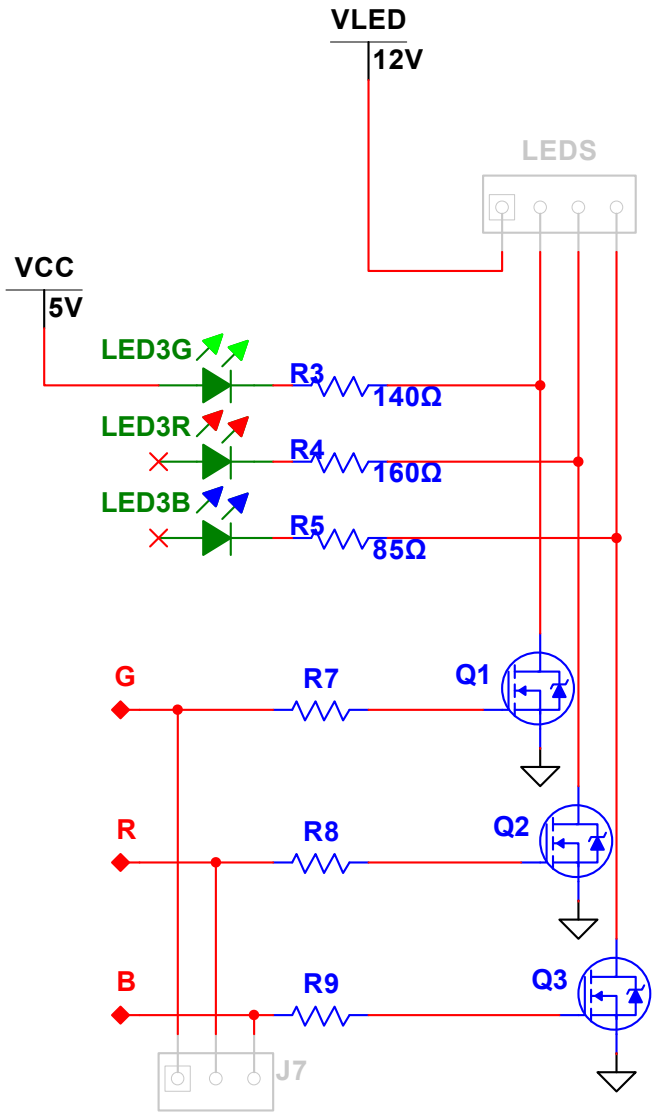
VLED
12V
LEDS
VCC
5V
LED3G
R3
140Ω
LED3R
R4
160Ω
LED3B
R5
85Ω
G
R7
Q1
R
R8
Q2
B
R9
Q3
J7

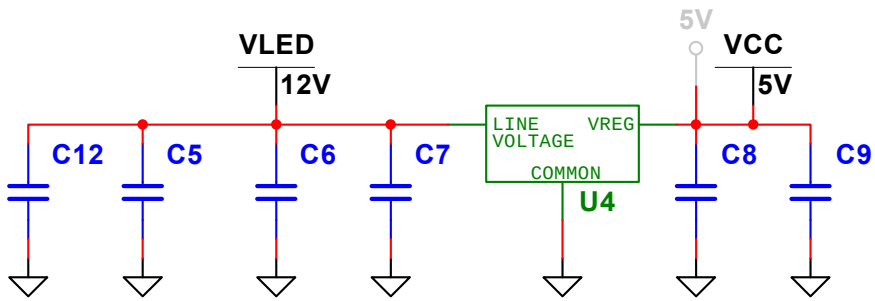
VLED
12V
5V
VCC
5V
C12
C5
C6
C7
LINE VOLTAGE
VREG
COMMON
U4
C8
C9

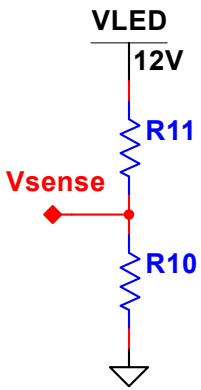
VLED
12V
R11
Vsense
R10