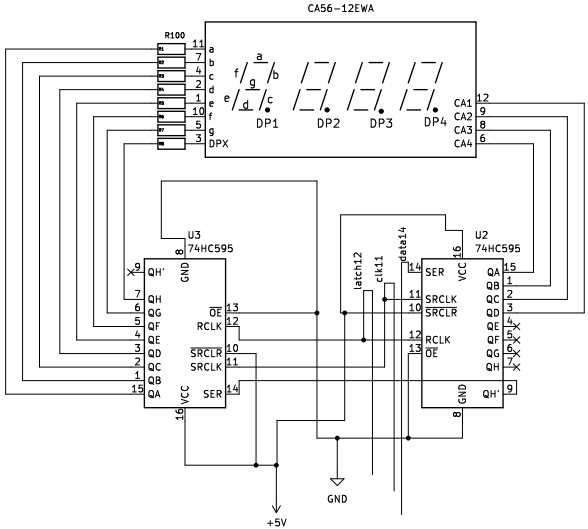

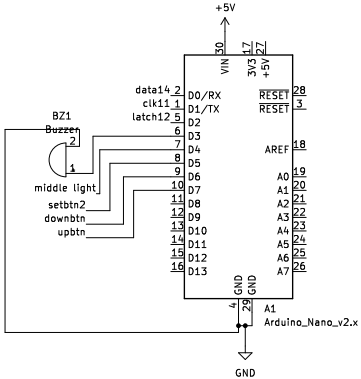

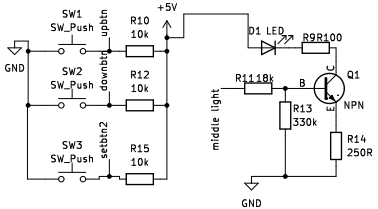

Untitled Sheet

File: untitled.kicad_sch

Sheet: /		
File: big sevensegment.kicad_sch		
Title:		
Size: A4	Date:	**Rev:**
KiCad E.D.A. kicad 7.0.8		Id: 1/2

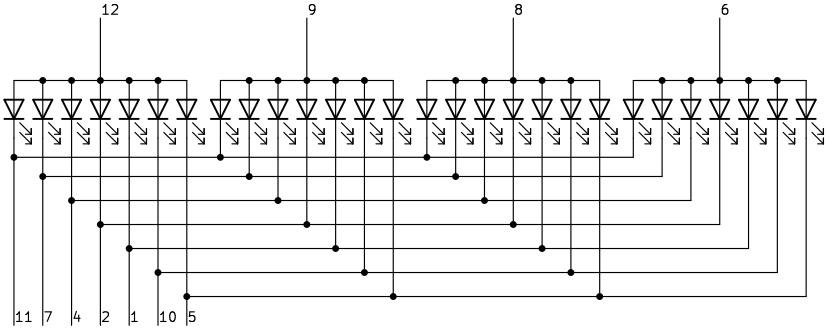

Sheet: /Untitled Sheet/
File: untitled.kicad_sch

Title:

Size: A5	Date:	**Rev:**
KiCad E.D.A. kicad 7.0.8		Id: 2/2