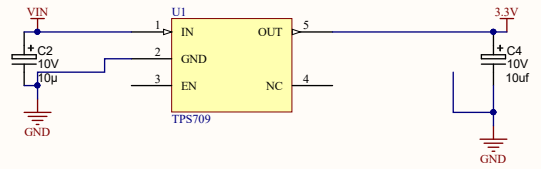

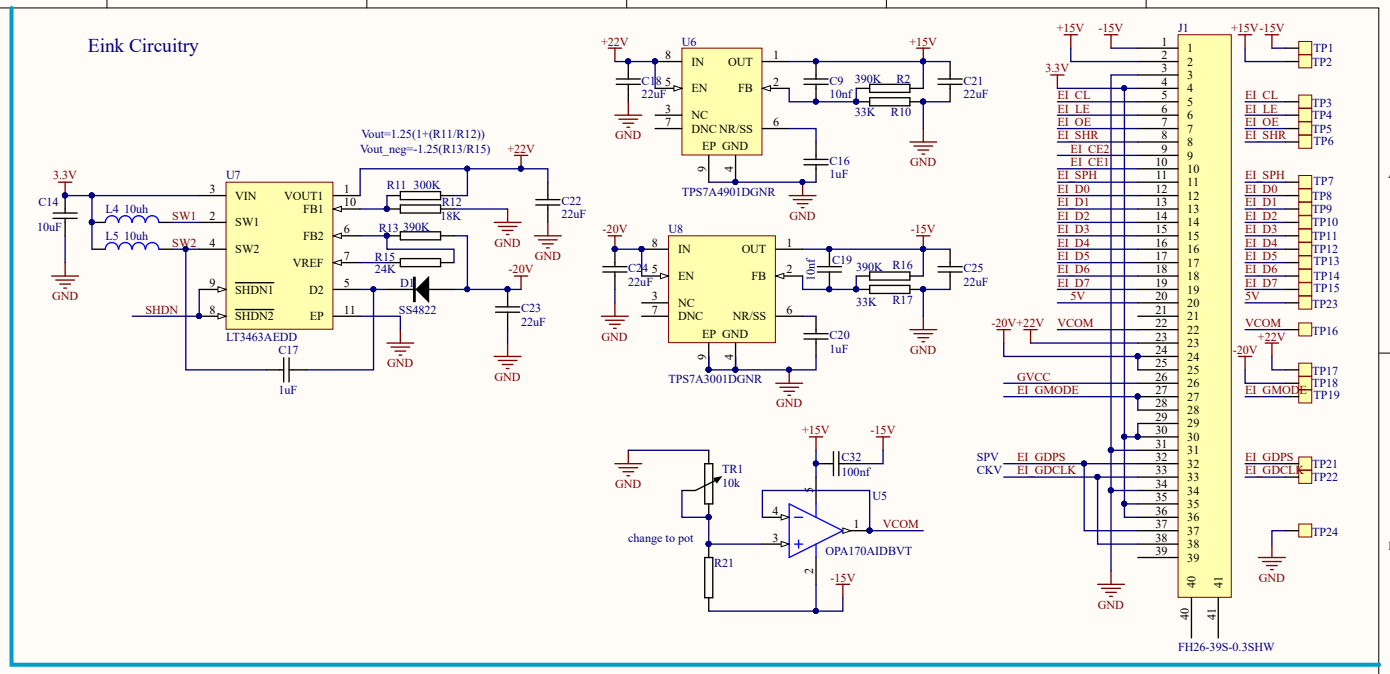

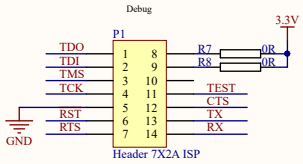

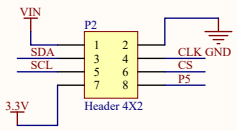

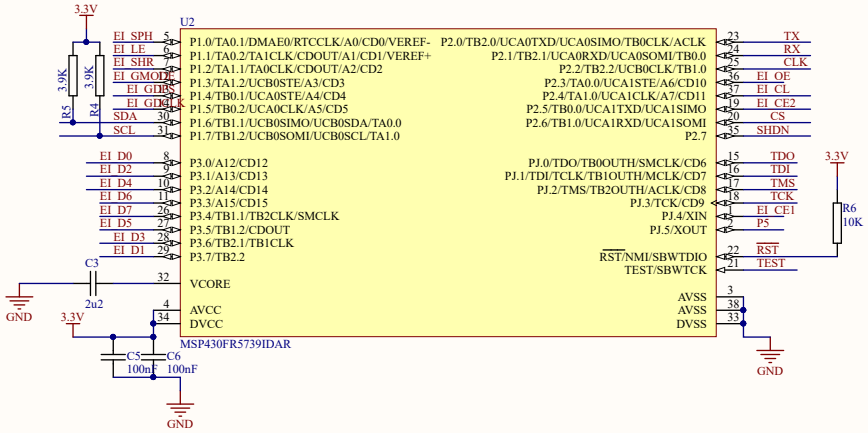

Title * WireFrame			Gaurav Singh www.CircuitValley.com All rights reserved
Size: A3	Number:*	Revision:* V1.0	
Date: 3/15/2017	Time: 11:01:50 PM	Sheet* of *	
File: e-ink_sch.SchDoc			