J1A / J2A

J1A			J2A
GND	C1	GND	C1 GND
DP0_C2M_P	C2	DP0_C2M_P	C2 DP0_C2M_P
DP0_C2M_N	C3	DP0_C2M_N	C3 DP0_C2M_N
GND	C4	GND	C4 GND
GND	C5	GND	C5 GND
DP0_M2C_P	C6	DP0_M2C_P	C6 DP0_M2C_P
DP0_M2C_N	C7	DP0_M2C_N	C7 DP0_M2C_N
GND	C8	GND	C8 GND
GND	C9	GND	C9 GND
LA06_P	C10	LA06_P	C10 LA06_P
LA06_N	C11	LA06_N	C11 LA06_N
GND	C12	GND	C12 GND
GND	C13	GND	C13 GND
LA10_P	C14	LA10_P	C14 LA10_P
LA10_N	C15	LA10_N	C15 LA10_N
GND	C16	GND	C16 GND
GND	C17	GND	C17 GND
LA14_P	C18	LA14_P	C18 LA14_P
LA14_N	C19	LA14_N	C19 LA14_N
GND	C20	GND	C20 GND
GND	C21	GND	C21 GND
LA18_P_CC	C22	LA18_CC_P	C22 LA18_P_CC
LA18_N_CC	C23	LA18_CC_N	C23 LA18_N_CC
GND	C24	GND	C24 GND
GND	C25	GND	C25 GND
LA27_P	C26	LA27_P	C26 LA27_P
LA27_N	C27	LA27_N	C27 LA27_N
GND	C28	GND	C28 GND
GND	C29	GND	C29 GND
SCL	C30	SCL	C30 SCL
SDA	C31	SDA	C31 SDA
GND	C32	GND	C32 GND
GND	C33	GND	C33 GND
GA0	C34	GA0	C34 GA0
12P0V	C35	12P0V_C35	C35 12P0V
GND	C36	GND	C36 GND
12P0V	C37	12P0V_C37	C37 12P0V
GND	C38	GND	C38 GND
3P3V	C39	3P3V_C39	C39 3P3V
GND	C40	GND	C40 GND

FMC LPC Terminal — FMC LPC Socket

Row A B E F J K is HPC Signal
LPC Uses only rows C, D, G, H

J1B / J2B

J1B			J2B
PG_C2M	D1	PG_C2M	D1 PG_C2M
GND	D2	GND	D2 GND
GND	D3	GND	D3 GND
GBTCLK0_M2C_P	D4	GBTCLK0_M2C_P	D4 GBTCLK0_M2C_P
GBTCLK0_M2C_N	D5	GBTCLK0_M2C_N	D5 GBTCLK0_M2C_N
GND	D6	GND	D6 GND
GND	D7	GND	D7 GND
LA01_P_CC	D8	LA01_CC_P	D8 LA01_P_CC
LA01_N_CC	D9	LA01_CC_N	D9 LA01_N_CC
GND	D10	GND	D10 GND
LA05_P	D11	LA05_P	D11 LA05_P
LA05_N	D12	LA05_N	D12 LA05_N
GND	D13	GND	D13 GND
LA09_P	D14	LA09_P	D14 LA09_P
LA09_N	D15	LA09_N	D15 LA09_N
GND	D16	GND	D16 GND
LA13_P	D17	LA13_P	D17 LA13_P
LA13_N	D18	LA13_N	D18 LA13_N
GND	D19	GND	D19 GND
LA17_P_CC	D20	LA17_CC_P	D20 LA17_P_CC
LA17_N_CC	D21	LA17_CC_N	D21 LA17_N_CC
GND	D22	GND	D22 GND
LA23_P	D23	LA23_P	D23 LA23_P
LA23_N	D24	LA23_N	D24 LA23_N
GND	D25	GND	D25 GND
LA26_P	D26	LA26_P	D26 LA26_P
LA26_N	D27	LA26_N	D27 LA26_N
GND	D28	GND	D28 GND
TCK	D29	TCK	D29 TCK
TDI	D30	TDI	D30 TDI
TDO	D31	TDO	D31 TDO
3P3VAUX	D32	3P3VAUX	D32 3P3VAUX
TMS	D33	TMS	D33 TMS
TRST_L	D34	TRST_L	D34 TRST_L
GA1	D35	GA1	D35 GA1
3P3V	D36	3P3V_D36	D36 3P3V_D36
GND	D37	GND	D37 GND
3P3V	D38	3P3V_D38	D38 3P3V_D38
GND	D39	GND	D39 GND
3P3V	D40	3P3V_D40	D40 3P3V_D40

FMC LPC Terminal — FMC LPC Socket

J1C / J2C

J1C			J2C
GND	G1	GND	G1 GND
CLK1_M2C_P	G2	CLK1_M2C_P	G2 CLK1_M2C_P
CLK1_M2C_N	G3	CLK1_M2C_N	G3 CLK1_M2C_N
GND	G4	GND	G4 GND
GND	G5	GND	G5 GND
LA00_P_CC	G6	LA00_CC_P	G6 LA00_P_CC
LA00_N_CC	G7	LA00_CC_N	G7 LA00_N_CC
GND	G8	GND	G8 GND
LA03_P	G9	LA03_P	G9 LA03_P
LA03_N	G10	LA03_N	G10 LA03_N
GND	G11	GND	G11 GND
LA08_P	G12	LA08_P	G12 LA08_P
LA08_N	G13	LA08_N	G13 LA08_N
GND	G14	GND	G14 GND
LA12_P	G15	LA12_P	G15 LA12_P
LA12_N	G16	LA12_N	G16 LA12_N
GND	G17	GND	G17 GND
LA16_P	G18	LA16_P	G18 LA16_P
LA16_N	G19	LA16_N	G19 LA16_N
GND	G20	GND	G20 GND
LA20_P	G21	LA20_P	G21 LA20_P
LA20_N	G22	LA20_N	G22 LA20_N
GND	G23	GND	G23 GND
LA22_P	G24	LA22_P	G24 LA22_P
LA22_N	G25	LA22_N	G25 LA22_N
GND	G26	GND	G26 GND
LA25_P	G27	LA25_P	G27 LA25_P
LA25_N	G28	LA25_N	G28 LA25_N
GND	G29	GND	G29 GND
LA29_P	G30	LA29_P	G30 LA29_P
LA29_N	G31	LA29_N	G31 LA29_N
GND	G32	GND	G32 GND
LA31_P	G33	LA31_P	G33 LA31_P
LA31_N	G34	LA31_N	G34 LA31_N
GND	G35	GND	G35 GND
LA33_P	G36	LA33_P	G36 LA33_P
LA33_N	G37	LA33_N	G37 LA33_N
GND	G38	GND	G38 GND
VADJ	G39	VADJ_G39	G39 VADJ
GND	G40	GND	G40 GND

FMC LPC Terminal — FMC LPC Socket

J1D / J2D

J1D			J2D
VREF_A_M2C	H1	VREF_A_M2C_H1	H1 VREF_A_M2C
PRSNT_M2C_L	H2	PRSNT_M2C_H2	H2 PRSNT_M2C_L
GND	H3	GND	H3 GND
CLK0_M2C_P	H4	CLK0_M2C_P	H4 CLK0_M2C_P
CLK0_M2C_N	H5	CLK0_M2C_N	H5 CLK0_M2C_N
GND	H6	GND	H6 GND
LA02_P	H7	LA02_P	H7 LA02_P
LA02_N	H8	LA02_N	H8 LA02_N
GND	H9	GND	H9 GND
LA04_P	H10	LA04_P	H10 LA04_P
LA04_N	H11	LA04_N	H11 LA04_N
GND	H12	GND	H12 GND
LA07_P	H13	LA07_P	H13 LA07_P
LA07_N	H14	LA07_N	H14 LA07_N
GND	H15	GND	H15 GND
LA11_P	H16	LA11_P	H16 LA11_P
LA11_N	H17	LA11_N	H17 LA11_N
GND	H18	GND	H18 GND
LA15_P	H19	LA15_P	H19 LA15_P
LA15_N	H20	LA15_N	H20 LA15_N
GND	H21	GND	H21 GND
LA19_P	H22	LA19_P	H22 LA19_P
LA19_N	H23	LA19_N	H23 LA19_N
GND	H24	GND	H24 GND
LA21_P	H25	LA21_P	H25 LA21_P
LA21_N	H26	LA21_N	H26 LA21_N
GND	H27	GND	H27 GND
LA24_P	H28	LA24_P	H28 LA24_P
LA24_N	H29	LA24_N	H29 LA24_N
GND	H30	GND	H30 GND
LA28_P	H31	LA28_P	H31 LA28_P
LA28_N	H32	LA28_N	H32 LA28_N
GND	H33	GND	H33 GND
LA30_P	H34	LA30_P	H34 LA30_P
LA30_N	H35	LA30_N	H35 LA30_N
GND	H36	GND	H36 GND
LA32_P	H37	LA32_P	H37 LA32_P
LA32_N	H38	LA32_N	H38 LA32_N
GND	H39	GND	H39 GND
VADJ	H40	VADJ_H40	H40 VADJ

FMC LPC Terminal — FMC LPC Socket

J3

GND	1	2	PG_C2M
DP0_C2M_P	3	4	GND
DP0_C2M_N	5	6	GND
GND	7	8	GBTCLK0_M2C_P
GND	9	10	GBTCLK0_M2C_N
DP0_M2C_P	11	12	GND
DP0_M2C_N	13	14	GND
GND	15	16	LA01_CC_P
GND	17	18	LA01_CC_N
LA06_P	19	20	GND
LA06_N	21	22	LA05_P
GND	23	24	LA05_N
GND	25	26	GND
LA10_P	27	28	LA09_P
LA10_N	29	30	LA09_N
GND	31	32	GND
GND	33	34	LA13_P
LA14_P	35	36	LA13_N
LA14_N	37	38	GND
GND	39	40	LA17_CC_P
GND	41	42	LA17_CC_N
LA18_CC_P	43	44	GND
LA18_CC_N	45	46	LA23_P
GND	47	48	LA23_N
GND	49	50	GND
LA27_P	51	52	LA26_P
LA27_N	53	54	LA26_N
GND	55	56	GND
GND	57	58	TCK
SCL	59	60	TDI
SDA	61	62	TDO
GND	63	64	3P3VAUX
GND	65	66	TMS
GA0	67	68	TRST_L
12P0V_C35	69	70	GA1
GND	71	72	3P3V_D36
12P0V_C37	73	74	GND
GND	75	76	3P3V_D38
3P3V_C39	77	78	GND
GND	79	80	3P3V_D40

Header 2x40

J4

GND	1	2	VREF_A_M2C_H1
CLK1_M2C_P	3	4	PRSNT_M2C_H2
CLK1_M2C_N	5	6	GND
GND	7	8	CLK0_M2C_P
GND	9	10	CLK0_M2C_N
LA00_CC_P	11	12	GND
LA00_CC_N	13	14	LA02_P
GND	15	16	LA02_N
LA03_P	17	18	GND
LA03_N	19	20	LA04_P
GND	21	22	LA04_N
LA08_P	23	24	GND
LA08_N	25	26	LA07_P
GND	27	28	LA07_N
LA12_P	29	30	GND
LA12_N	31	32	LA11_P
GND	33	34	LA11_N
LA16_P	35	36	GND
LA16_N	37	38	LA15_P
GND	39	40	LA15_N
LA20_P	41	42	GND
LA20_N	43	44	LA19_P
GND	45	46	LA19_N
LA22_P	47	48	GND
LA22_N	49	50	LA21_P
GND	51	52	LA21_N
LA25_P	53	54	GND
LA25_N	55	56	LA24_P
GND	57	58	LA24_N
LA29_P	59	60	GND
LA29_N	61	62	LA28_P
GND	63	64	LA28_N
LA31_P	65	66	GND
LA31_N	67	68	LA30_P
GND	69	70	LA30_N
LA33_P	71	72	GND
LA33_N	73	74	LA32_P
GND	75	76	LA32_N
VADJ_G39	77	78	GND
GND	79	80	VADJ_H40

Header 2x40

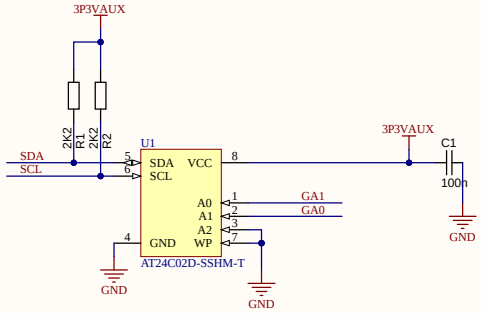

Title	FMC LPC Brekout 1V0 www.circuitvalley.com	
Size A3	Number	Revision
Date: 3-13-2025		Sheet of
File: C:\Users\..\FMC_HPC_LPC_Signals.Schdoc		Drawn By: