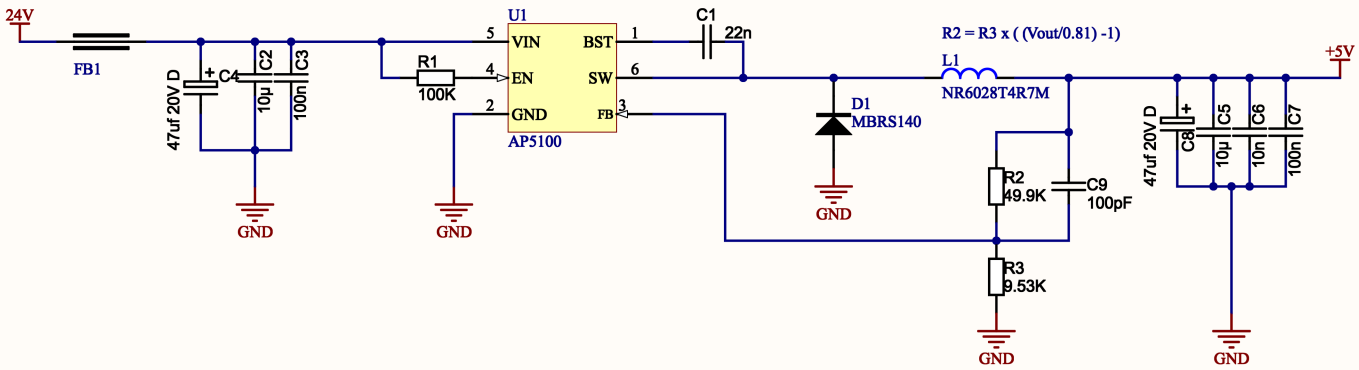

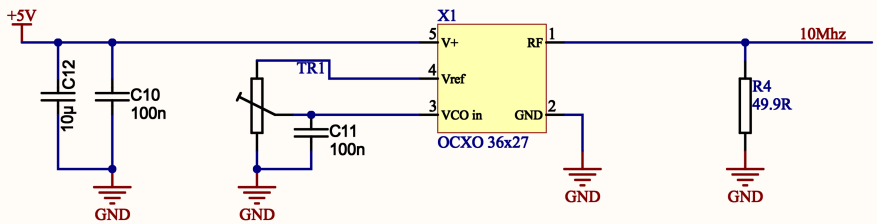

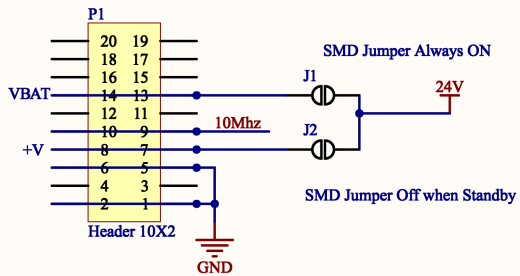

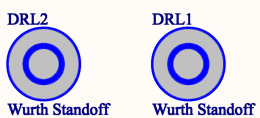

Title	PM66xx OCXO Option www.circuitvalley.com		
Size A4	Number		Revision
Date:	5-18-2022	Sheet of	
File:	C:\Users\..\PM6680_OCXO.SchDoc	Drawn By:	