High-Entropy STT-MTJ-Based TRNG

Elena Ioana Vatajelu and Giorgio Di Natale

***Abstract*— Hardware true random number generators (TRNGs) yield random numbers from physical processes. Traditionally, such devices are based on statistically random events such as thermal noise or other quantum phenomena. In this brief, we propose a novel TRNG design using a spin-transfer torque magnetic tunnel junction (MTJ) device. Our solution exploits the stochastic nature of the MTJ switching, and the behavior of an XOR gate dealing with probabilistic signals. We show that by using multiple MTJ devices, the proposed TRNG succeeds in filtering the negative effect of environmental changes as well as fabrication-induced variability and generates random sequences with high-entropy under any conditions.**

***Index Terms*— Security, spin-transfer torque magnetic tunnel junction (STT-MTJ), true random number generators (TRNGs).**

I. Introduction

A true random number generator (TRNG) is built on an unpredictable stochastic process with high entropy. Common hardware TRNG implementations are based either on the exploitation of intrinsic noise or on the use of materials with special properties. The well-established approaches pertaining to the first class are as follows.

1) Thermal-noise amplification which is compared to a constant value [1]. The result is digitalized, thus generating a sequence of random bits.
2) Noisy jitter exploitation, where the oscillations of ring oscillators are sampled at regular intervals [2]. If the noisy jitter of these oscillations is large enough, the samples will be highly uncertain and the output will be random.
3) Meta-stability exploitation (based on circuits with meta-stability), where the circuit is forced into its metastable state and the environmental noise will make it evolve randomly toward one of its stable states [3].

The TRNGs based on thermal noise, jitter and meta-stability are today well-recognized and have real implementation solutions due to their CMOS compatibility. In contrast, the TRNGs based on materials with special properties are considered exotic and expensive solutions and are rarely used due to the lack of easy CMOS integration, even if they present better theoretical randomness. A recently proposed special class of TRNGs combines the two main sources of randomness, i.e., intrinsic noise and materials with special characteristics. These TRNGs are designed using emerging memory technologies [4], [5].

In this brief, we propose a TRNG solution based on the use of spin-transfer torque magnetic tunnel junctions (STT-MTJs). The STT-MTJ devices are supposed to be among the predominant emerging technologies for nonvolatile memories. Moreover, the intrinsic stochasticity characterizing the write operation makes them also suitable for the generation of random numbers. Indeed, the write operation has a stochastic behavior, i.e., the success of a write operation is a probabilistic phenomenon, due to the intrinsic thermal instability of all magnetic nanostructures. This instability can be manipulated to set the write probability to 50%, thus generating random numbers [6]–[11].

Solutions in [7]–[11] are similar to the method proposed in this brief and are briefly described in the following. This brief [7] presents a simple STT-MTJ-based TRNG implementation, where a single MTJ is used. In this proposal, the authors have shown that if the MTJ is written with the 50% probability, a random number is generated, i.e., it behaves like a spintronic dice. This result validated by the work in [8], where the authors show measurement data of an MTJ device. However, this implementation solution is sensitive to environmental and fabrication variations. As a result, the generated numbers are random only under perfect conditions. To solve this issue, it is possible to tune the write operation in such a way that it offers 50% probability under all conditions. This can be done by monitoring the circuit operating conditions and sending feedback to the write driver. The solutions presented in [9]–[11] feature the use of a closed-loop control of the MTJ write driver. In these solutions, basic randomness tests are performed on a limited set of responses and, according to the quality of the obtained randomness, a feedback is sent to the write driver. While these solutions prove useful, they still have issues such as high complexity of the write driver design, low efficiency of the randomness evaluation, and unavailability when extreme operating conditions are detected.

In this brief, we propose an innovative TRNG design by combining multiple spintronic dices whose outputs are XORed in order to mitigate both manufacturing process variability and variations in the write logic. This brief advances the state of the art by making the following contributions.

1) It provides an analysis of the MTJ behavior under variability and a formal analysis of the effect of the XOR gates in such a circuit.
2) It provides a solution dedicated to VLSI implementation of a CMOS-compatible MTJ-based TRNG able to mitigate the effects of process and environmental variability based on the identification of the minimum number of required MTJs.

This brief is organized as follows. Section II summarizes the operation principle of the spintronic MTJ. The theoretical background is provided in Section III. The implementation of the proposed solution is described in Section IV, while Section V discusses the simulation results. Finally, Section VI draws conclusions.

II. Operation Principle of the Spintronic MTJ

An MTJ device consists of two ferromagnetic layers, one with fixed magnetic orientation (pinned layer) and one with freely rotating magnetic orientation (free layer), separated by an oxide barrier. The relative magnetic orientation of the ferromagnetic layers controls the electrical resistance of the device. The MTJ device exhibits low resistance (logic state "0") when the relative magnetizations of the ferromagnetic layers are parallel, and high resistance (logic state "1") when they are antiparallel. The writing of an MTJ element (changing its relative magnetic orientation and therefore its resistance) is a current-controlled bipolar operation [12], and it has

Manuscript received January 31, 2018; revised May 30, 2018 and August 24, 2018; accepted October 14, 2018. Date of publication November 16, 2018; date of current version January 23, 2019. *(Corresponding author: Elena Ioana Vatajelu.)*

The authors are with CNRS, TIMA Laboratory, Grenoble-Alpes University, 38000 Grenoble, France (e-mail: ioana.vatajelu@univ-grenoble-alpes.fr).

Color versions of one or more of the figures in this brief are available online at http://ieeexplore.ieee.org.

Digital Object Identifier 10.1109/TVLSI.2018.2879439

1063-8210 © 2018 IEEE. Personal use is permitted, but republication/redistribution requires IEEE permission.
See http://www.ieee.org/publications_standards/publications/rights/index.html for more information.

Authorized licensed use limited to: INSTITUTO NAL. ASTROFISICA O. Y ELECT (INAOE). Downloaded on December 14,2021 at 21:22:24 UTC from IEEE Xplore. Restrictions apply.

a stochastic behavior, i.e., the success of a write operation is a probabilistic phenomenon.

The stochasticity of the MTJ operation is caused by the thermally activated magnetization reversal (phenomenon that affects all magnetic nanostructures). According to Néel–Brown theory, at finite temperature, there is a finite probability for the magnetization to flip and reverse its direction. In the case of STT devices (see [13] for details), the writing operation is a stochastic process [14] due to the random thermal fluctuations affecting the magnetization of the MTJ device. By extending the Néel–Brown model [15], one can estimate the probability of a successful write operation as given by

$$p_i = \exp\left(\frac{-\pi^2 \cdot \Delta \cdot \left(\frac{I_W}{I_{c0}} - 1\right)/4}{\frac{I_W}{I_{c0}} \cdot \exp\left(2 \cdot \alpha \cdot \gamma \cdot H_k \cdot tw \cdot \frac{\frac{I_W}{I_{c0}} - 1}{1+\alpha^2}\right) - 1}\right) \quad (1)$$

where I_W is the current controlling the write operation, tw is the duration of the write operation, I_{c0} is the elementary critical current (material and geometry dependent), α is the Gilbert damping coefficient, γ is the gyromagnetic factor, H_k is the effective anisotropy field, and Δ is the thermal stability factor, which is computed as

$$\Delta = \frac{\Delta E}{k_B T} \quad (2)$$

where k_B is Boltzmann's constant, T is the operation temperature, while ΔE is the height of the energy barrier ($\Delta E = K_u V$), K_u is the uniaxial anisotropy per unit volume, and V is the volume of the free ferromagnetic layer. All parameters have an important effect on the probability of correct writing operation. However, most of them are material and geometry dependent and they are set at design time, leaving us with only two parameters to control for achieving the desired write probability, i.e., the amplitude of the current controlling the write operation (I_W) and its duration (tw).

III. Theoretical Background

This section provides an overview of the basic notions required to understand the proposed TRNG design and its quality. It first introduces the concept of entropy, used to quantify the uncertainty of a random source, followed by the probabilistic analysis of the XOR combination of bitstreams generated by multiple independent random sources [16], which is the solution adopted in this brief.

The entropy is the average amount of information produced by a stochastic source of data. According to Shannon's definition, each data value has an entropy equal to the negative logarithm of the probability mass function for that value. In the case where the produced data is a single bit (i.e., a dice), the entropy is given by

$$H(X) = -P_{X=0}\log_2(P_{X=0}) - P_{X=1}\log_2(P_{X=1}) \quad (3)$$

where X is the datum with possible values 0 and 1, $P_{X=0}$ is the probability of the datum to be 0, and $P_{X=1}$ is the probability of the datum to be 1.

When assuming the MTJ write operation as the source of randomness, it is possible to calculate its entropy in different operation conditions. As an example, Fig. 1 shows the entropy of the MTJ state after performing a write operation with constant write current ($I_W = 150\ \mu$A) and variable write duration (tw), under the assumption of process variability (I_{c0}, which is strongly dependent on fabrication-induced material and geometry variations). The entropy has been calculated using (3) in which the state probability is given by (1). Under these conditions, we have identified the maximum entropy conditions, represented by the black line in Fig. 1. Ideally, the entropy of the data generated by a TRNG should respect the maximum

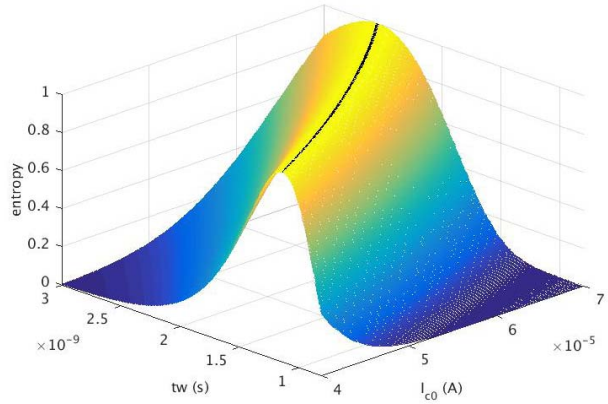

Fig. 1. Entropy of the MTJ state after performing a write operation.

entropy condition. In reality, the data generated by the TRNG is situated in the vicinity of the black line due to uncontrollability of the manufacturing process and noise. Previously proposed methods [9]–[11] try to tune at run time the write driver to cope with process and environmental variations so that the highest entropy is achieved. In contrast, the proposed method does not require the running of the write driver. It achieves the highest entropy by combining multiple MTJs in an XOR. The reason is detailed in the next paragraphs.

Let us consider a probabilistic digital signal, with probability p_i being in logic state "1." For this signal to be perfectly random, the probability p_i should be equal to 50% ($= 1/2$). In the case of nonideality, we define the probability deviation from the ideal value as $\alpha_i = |1/2 - p_i|$, with $\alpha_i \in [0; 1/2]$. Combining two such signals as such in an XOR gate, a probabilistic signal will result, for which the probability of being in the logic state "1" is given by (4), directly obtained from the XOR truth table

$$P_{XOR} = p_1 \cdot (1 - p_2) + p_2 \cdot (1 - p_1) = 1/2 \pm 2\alpha_1\alpha_2. \quad (4)$$

Equation (4) can be extended to the case of N probabilistic sources, as shown in the following equation:

$$P_{XOR} = 1/2 \pm (-2)^{N-1}\alpha_1\alpha_2\ldots\alpha_N. \quad (5)$$

The deviation of the output signal from the ideal randomness can be defined as in the following equation:

$$\alpha_{XOR} = 2^{N-1}\alpha_1\alpha_2\ldots\alpha_N \quad (6)$$

with $\alpha_{XOR} \in [0; 1/2]$. In other words, the magnitude of α_{XOR} represents the quality of the signal randomness, i.e., the smaller its value the better the randomness. It should be noted that α_{XOR} is obtained by multiplying values $2\alpha_i \leq 1$. Therefore, its absolute value will be equal to or smaller than the smallest α_i. In conclusion, by XORing probabilistic signals, we obtain a signal with better randomness than any of the initial signals. Building on this theoretical analysis, we propose a high-quality TRNG with the entropy source given by the stochastic behavior of the spintronic MTJ devices.

IV. Proposed Solution

For a given MTJ, by setting proper values of write current amplitude and duration (that we call operation mode hereinafter), it is possible to assure nearly 100% probability of write success, i.e., $p_i \cong 1$ (as it is done when such devices are used as memories). Alternatively, due to the intrinsic stochastic behavior of STT-MTJ elements, the operation mode can be tuned to allow for the generation of random bits (by targeting $p_i = 1/2$ probability of successful writing for each bit, i.e., $\alpha_i = 0$), as shown in [4].

Authorized licensed use limited to: INSTITUTO NAL. ASTROFISICA O. Y ELECT (INAOE). Downloaded on December 14,2021 at 21:22:24 UTC from IEEE Xplore. Restrictions apply.

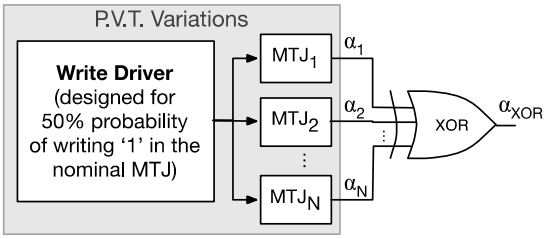

Fig. 2. High-entropy STT-MTJ-based TRNG implementation.

TABLE I
MTJ PARAMETERS [USED IN (1)]

Parameter	Mean (μ)	σ / μ
V – Volume of the free ferromagnetic layer	2080 nm^3	5%
I_{C0} – Elementary critical current	66 μA	6%
I_W – Current controlling the write operation	150 μA	3%
tw – Duration of the write operation	1.6 ns	–

However, calculating the operation mode that generates $p_i = 1/2$ for a certain STT-MTJ design [with (1)] and using it to control the device is not sufficient to generate high-quality random numbers. This is due to the fact that the fluctuations in operation temperature and voltage, and the fabrication-induced process variability is responsible for variations (cycle-to-cycle and device-to-device) of the write success probability p_i. In other words, these variations cause an increase in the value of α_i. Therefore, in order to achieve high-quality random numbers, the operation mode that guarantees $p_i = 1/2$ should be calculated for each fabricated device and under all possible operation conditions. This would result in a very expensive process and an inefficient TRNG. The closed-loop solutions presented in [9]–[11] allow for on the fly tuning of the operation mode to guarantee the quality of the random bitstream. Nevertheless, the efficiency of these solutions is strongly dependent on the versatility of the delay controlling elements and their capacity to filter noise (variations or attacks) with a minimum delay.

The solution proposed in this brief mitigates these issues, by XORing multiple MTJ devices, as illustrated in Fig. 2. The MTJs are controlled by write drivers designed to guarantee $p_i = 1/2$ (i.e., $\alpha_i = 0$) for the characteristics of the nominal MTJ device, working at room temperature and nominal supply voltage. However, due to environmental and process variations, the write probability of each device will deviate from nominal value, resulting in nonzero values of α_i. To estimate the magnitude of these deviations, we have performed 100-K Monte Carlo simulations of a single MTJ device with its write driver. This test circuit has been implemented in Cadence 6.1.6 Specter, using a 45-nm CMOS commercial technology process design kit in conjunction with a compact model for the MTJ device [15], composed of ferromagnetic layers with perpendicular magnetic anisotropy. The relevant parameters and their variations are summarized in Table I.

To incorporate the effect of all possible variations, the Monte Carlo simulations have been performed assuming normal distributions of fabrication parameters, write pulse amplitude, as well as three discrete values of temperatures (270 °K, 300 °K, and 370 °K).

The results are shown in Fig. 3, where we illustrate the dependence of the probability of correct write operation (p_i) on the write pulse duration. From the analysis, we can extract the range of variation of this probability for the write driver designed to guarantee $p_i = 1/2$ for the nominal MTJ device in nominal conditions. In our case, this means the write driver is designed to generate a write pulse of amplitude $I_W = 150\ \mu A$ and duration $tw = 1.6$ ns. The

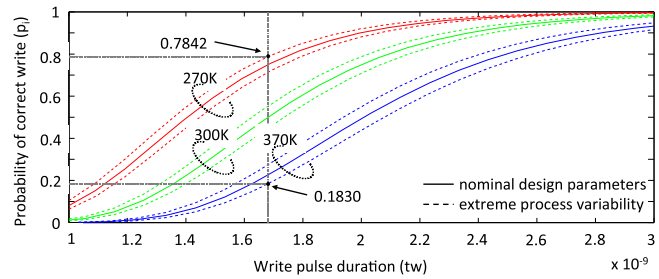

Fig. 3. Write probability versus write pulse duration.

results show that assuming constant write pulse duration, and all possible variability, the probability of correct write operation p_i ranges from 0.1830 to 0.7842. This translates into values of α_i equal to 0.3170 and 0.2842.

The observed worst case values of alpha are far from the ideal 0 value. Therefore, in order to be able to generate unbiased random numbers with this source of entropy, it is necessary to resort to the XOR operation of N MTJ devices. The quality of the obtained random number is given by the value of α_{XOR}, which depends on the α_i values of individual devices according to the law in (6).

Since all MTJ devices come from the same distribution, we can assume that in the worst case scenario they would all have a value α_i equal to the maximum obtained in the simulation, i.e., $\alpha_{max} = 0.3170$. In this case, (6) can be rewritten as

$$\alpha_{XOR} = 2^{N-1}\alpha_{max}^{N}. \tag{7}$$

For a target $\alpha_{XOR_{1...N}}$, we can compute the number of required MTJ devices (i.e., N) in the worst case scenario, as follows:

$$N = \frac{\log(2 \cdot \alpha_{XOR})}{\log(2 \cdot \alpha_{max})}. \tag{8}$$

The value of α_{XOR} gives the quality of the generated random numbers, i.e., the smaller the α_{XOR} the better the randomness quality. An ideal random number will be obtained for $\alpha_{XOR} = 0$. Equation (8) shows that the ideal randomness can be achieved only if an infinite number of MTJ devices (i.e., $N = \infty$) is used. However, from a practical perspective, it is possible to generate high-quality random numbers starting from a slightly biased random source. Therefore, we need to find the optimal value of α_{XOR} (i.e., α_{XOR_opt}) that guarantees the targeted quality of the generated random number and minimizes the number of MTJ devices (N). For this purpose, we have applied the NIST test [17] to evaluate the quality of random numbers obtained for different values of α_{XOR}. The maximum value of α_{XOR} for which all the NIST tests have passed gives α_{XOR_opt}. The evaluation has been performed by generating 10^3 sequences of 10^6 random bits with values of α_{XOR} ranging from 10^{-2} to 10^{-7}. Fig. 3 shows, for each value of α_{XOR}, how many sequences have passed the tests (one per each column). When running the NIST tests with multiple test sequences, data are considered random if at least a certain number of sequences have passed the test (threshold row in Fig. 4). Results show that $\alpha_{XOR-opt} = 10^{-5}$.

V. RESULTS AND IMPLEMENTATION DETAILS

Starting from the previous analysis and using the schematic in Fig. 2, we have built a hardware TRNG. To guarantee the quality of the resulted random number, we have imposed $\alpha_{XOR} = 10^{-5}$. This value corresponds to entropy of $1–10^{-9}$ according to (3). By using this value in (8) together with the estimated $\alpha_{max} = 0.3170$ (worst case scenario as explained in Section IV), we have calculated that $N = 24$ MTJ devices will guarantee a high-quality random number

Authorized licensed use limited to: INSTITUTO NAL. ASTROFISICA O. Y ELECT (INAOE). Downloaded on December 14,2021 at 21:22:24 UTC from IEEE Xplore. Restrictions apply.

α	Frequency	BlockFrequency	CumulativeSums	Runs	LongestRun	Rank	FFT	NonOverlapTemplate	Universal	ApproxEntropy	RandomExcursions	RandomExcVariant	Serial	LinearComplexity
10^{-2}	0	0	0	0	0	0	0	0	0	0	0	0	0	0
10^{-3}	0	188	0	0	889	1009	1014	0	992	0	0	0	770	1014
10^{-4}	724	1011	726	991	1011	1011	1023	1024	1011	1006	387	388	1013	1015
10^{-5}	1010	1014	1012	1015	1010	1010	1011	1024	1011	1008	641	636	1015	1012
10^{-6}	1018	1019	1015	1013	1012	1013	1012	1024	1016	1011	655	655	1017	1016
10^{-7}	1014	1015	1017	1012	1011	1014	1012	1024	1015	1009	633	631	1011	1009
Threshold	**1004**	**1004**	**1004**	**1004**	**1004**	**1004**	**1004**	**1004**	**1004**	**1004**	**610**	**610**	**1004**	**1004**
10^{-2}	0	0	0	0	0	0	0	0	0	0	0	0	0	1
10^{-3}	0	0	0	0	0	1	1	0	0	0	0	0	0	1
10^{-4}	0	1	0	0	1	1	1	1	1	1	0	0	1	1
10^{-5}	1	1	1	1	1	1	1	1	1	1	1	1	1	1
10^{-6}	1	1	1	1	1	1	1	1	1	1	1	1	1	1
10^{-7}	1	1	1	1	1	1	1	1	1	1	1	1	1	1

Fig. 4. NIST test results assuming various values of α_{XOR}.

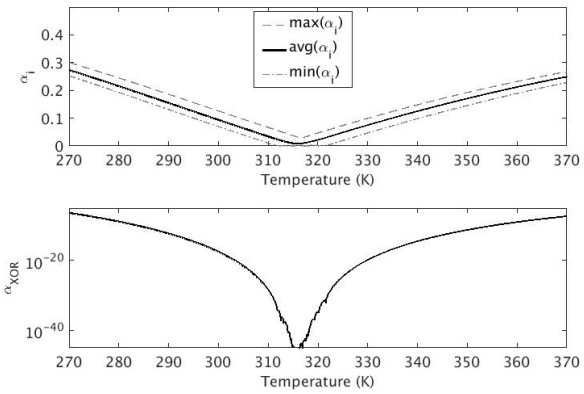

Fig. 5. Variation of α as a function of temperature.

(according to NIST standards) regardless of the fabrication and environmental variations within the circuit. We have implemented the TRNG circuit in Fig. 2 with 24 MTJ devices and have simulated it under the assumption of process, temperature, and voltage variability.

Fig. 5 shows the simulation results obtained by consecutive generations of random numbers using a single TRNG built with 24 devices, under linear variation of temperature. Together with the temperature, the write current was assumed affected by variability (with a maximum of 10% variation from its nominal value), in this way, the current noise is also taken into account.

To remain coherent with the previous simulations, the worst case scenario was considered here too, i.e., to high-temperature values, low values of write current were associated, and vice versa. Fig. 5 (top) shows the alpha values of the MTJ devices, while Fig. 5 (bottom) shows the obtained α_{XOR}. For the sake of clarity, we have only shown the minimum, maximum and average values of the individuals α_i. It should be noted that the value of α_{XOR} remains smaller than the $\alpha_{\text{XOR-opt}}$ value under all temperature conditions.

In addition, we have subjected our proposal to the NIST test. We have generated 100 sequences of 7-million random. As expected, all the sequences have passed the NIST tests.

The proposed TRNG can be designed to work parallel (to maximize the throughput) or serial (to minimize the area). Two possible implementations are illustrated in Fig. 6. The area footprint of the parallel implementation can be estimated as in (9), while the area of the serial implementation is estimated by

$$\text{A}_{\text{parallel}} = \text{N} \cdot (A_{\text{XOR}} + A_{\text{FF}} + A_{\text{SA}} + A_{\text{WD}}) \tag{9}$$

$$\text{A}_{\text{serial}} = (A_{\text{XOR}} + A_{\text{FF}} + A_{\text{SA}} + A_{\text{WD}}) + 2 \cdot N \cdot A_{\text{TG}} \tag{10}$$

where $N = 24$ is the number of MTJ devices, A_{XOR} is the area of an XOR circuit, A_{FF} is the area of a flip-flop, A_{SA} is the area of a sense amplifier, A_{WD} is the area of a write driver, and A_{TG} is the

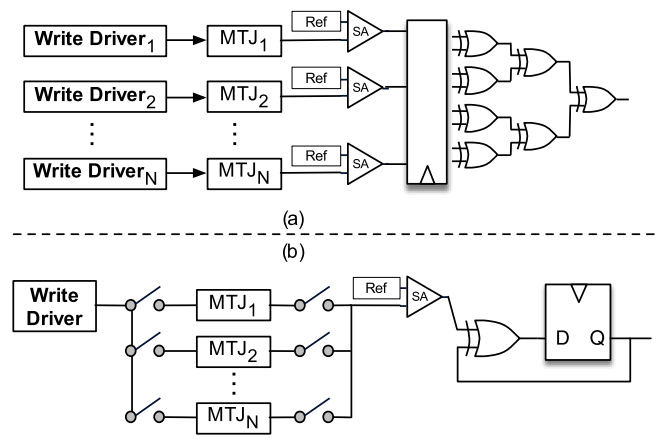

Fig. 6. (a) Parallel and (b) serial implementations of the proposed solution.

TABLE II
COMPARISON WITH STATE-OF-THE-ART SOLUTIONS

	Mbit/s	Area	Energy/bit	Attacks
[8]	66	˜1 a.u.	4.39 pJ	Not proven
[9]	66	˜1 a.u.	1.25 pJ	Not proven
[10]	30	1 a.u.	2.63 pJ	Yes (limited)
This (parallel)	74	2.4 a.u.	46.33 pJ	Yes
This (serial)	3.06	0.2 a.u.	46.33 pJ	Yes

area of a transmission gate. The area occupied by the MTJ devices does not affect the total footprint due to its 3D integration. It should be noted that the parallel implementation is roughly $N\times$ larger than the serial implementation and it should be used only when a large throughput is required. The throughput depends on the number of operations performed to generate a random bit and on the speed of each operation. In the parallel implementation, the time required to generate a random bit is given by (11), while (12) computes the time required to generate a random bit in the serial implementation (the wr0 operation has the function of reset)

$$t_{\text{parallel}} = t_{\text{wr0}} + t_{\text{wr1}} + t_{\text{rd}} \tag{11}$$

$$t_{\text{serial}} = N \cdot (t_{\text{wr0}} + t_{\text{wr1}} + t_{\text{rd}}) \tag{12}$$

where t_{wr0} is the time required to write the MTJ to "0" with high probability (for the proposed design $t_{\text{wr0}} = 10$ ns), t_{wr1} is the time required to write the MTJ to "1" with 50% probability (for the proposed design $t_{\text{wr1}} = 1.68$ ns), and t_{rd} is the time required to read the state of the MTJ (for the proposed design $t_{\text{rd}} = 3$ ns). Overall, the proposed scheme generates random bits at the speed of 64 Mb/s in the parallel implementation and 2.67 Mb/s in the serial implementation.

VI. CONCLUSION

This brief proposes a TRNG implementation based on STT-MTJ devices. The solution exploits the postprocessing power of XORs and does not require complex analog design to compensate the effects of variability and noise. This makes the design straightforward and guarantees the quality of the random numbers from the first generated bit. In contrast, the previous solutions [9]–[11] require a control setup time up to 300 cycles before the high entropy can be guaranteed. In addition, this solution filters temperature attacks without any loss in throughput and randomness quality, while the other solutions suffer massive loss in throughput, not being able to filter strong attacks. Other comparative points are listed in Table II. Area footprint has been estimated based on the designs reported by the authors.

Authorized licensed use limited to: INSTITUTO NAL. ASTROFISICA O. Y ELECT (INAOE). Downloaded on December 14,2021 at 21:22:24 UTC from IEEE Xplore. Restrictions apply.

REFERENCES

[1] C. S. Petrie and J. A. Connelly, "A noise-based IC random number generator for applications in cryptography," *IEEE Trans. Circuits Syst. I, Fundam. Theory Appl.*, vol. 47, no. 5, pp. 615–621, May 2000.

[2] C. S. Petrie and J. A. Connelly, "Modeling and simulation of oscillator-based random number generators," in *Proc. IEEE ISCAS*, vol. 4, May 1996, pp. 324–327.

[3] S. K. Mathew *et al.*, "2.4 Gbps, 7 mW all-digital PVT-variation tolerant true random number generator for 45 nm CMOS high-performance microprocessors," *IEEE J. Solid-State Circuits*, vol. 47, no. 11, pp. 2807–2821, Nov. 2012.

[4] E. I. Vatajelu, G. Di Natale, and P. Prinetto, "Security primitives (PUF and TRNG) with STT-MRAM," in *Proc. IEEE VTS*, Apr. 2016, pp. 1–4.

[5] R. Karam, R. Liu, P.-Y. Chen, S. Yu, and S. Bhunia, "Security primitive design with nanoscale devices: A case study with resistive RAM," in *Proc. IEEE GLSVLSI*, May 2016, pp. 299–304.

[6] M. Tehranipoor, D. Forte, G. S. Rose, and S. Bhunia, *Security Opportunities in Nano Devices and Emerging Technologies*. Boca Raton, FL, USA: CRC Press, 2017.

[7] A. Fukushima *et al.*, "Spin dice: A scalable truly random number generator based on spintronics," *Appl. Phys. Express*, vol. 7, no. 8, p. 083001, Jul. 2014.

[8] W. Ho Choi *et al.*, "A magnetic tunnel junction based true random number generator with conditional perturb and real-time output probability tracking," in *IEEE IEDM Tech. Dig.*, Dec. 2014, pp. 12.5.1–12.5.4.

[9] S. Oosawa, T. Konishi, N. Onizawa, and T. Hanyu, "Design of an STT-MTJ based true random number generator using digitally controlled probability-locked loop," in *Proc. NEWCAS*, Jun. 2015, pp. 1–4.

[10] Y. Wang, H. Cai, L. A. B. Naviner, J.-O. Klein, J. Yang, and W. Zhao, "A novel circuit design of true random number generator using magnetic tunnel junction," in *Proc. IEEE/ACM NANOARCH*, Jul. 2016, pp. 123–128.

[11] E. I. Vatajelu, G. Di Natale, and P. Prinetto, "STT-MTJ-based TRNG with on-the-fly temperature/current variation compensation," in *Proc. IEEE IOLTS*, Sant Feliu de Guixols, Spain, Jul. 2016, pp. 179–184.

[12] J. C. Slonczewski, "Current-driven excitation of magnetic multilayers," *J. Magn. Magn. Mater.*, vol. 159, nos. 1–2, pp. L1–L7, 1996.

[13] Y. Zhang *et al.*, "Compact modeling of perpendicular-anisotropy CoFeB/MgO magnetic tunnel junctions," *IEEE Trans. Electron Devices*, vol. 59, no. 3, pp. 819–826, Mar. 2012.

[14] K. Munira, W. H. Butler, and A. W. Ghosh, "A quasi-analytical model for energy-delay-reliability tradeoff studies during write operations in a perpendicular STT-RAM cell," *IEEE Trans. Electron Devices*, vol. 59, no. 8, pp. 2221–2226, Aug. 2012.

[15] M. P. Sharrock, "Time dependence of switching fields in magnetic recording media," *J. Appl. Phys.*, vol. 76, no. 10, p. 6413, 1994.

[16] R. B. Davies. (2002). *Exclusive OR (XOR) and Hardware Random Number Generators*. [Online]. Available: http://www.robertnz.net/pdf/xor2.pdf

[17] A. Rukhin, "A statistical test suite for random and pseudorandom number generators for cryptographic applications," NIST, Gaithersburg, MD, USA, Tech. Rep. 800-22, 2010.

Authorized licensed use limited to: INSTITUTO NAL. ASTROFISICA O. Y ELECT (INAOE). Downloaded on December 14,2021 at 21:22:24 UTC from IEEE Xplore. Restrictions apply.