Nonlinear Dyn (2015) 81:189–199
DOI 10.1007/s11071-015-1981-9

ORIGINAL PAPER

A novel chaos-based post-processing for TRNG

Erdinç Avaroğlu · Taner Tuncer · A. Bedri Özer · Burhan Ergen · Mustafa Türk

Received: 18 September 2014 / Accepted: 15 February 2015 / Published online: 26 February 2015
© Springer Science+Business Media Dordrecht 2015

Abstract The usage of numbers generated by true random number generators is critical in cryptology field due to security reasons. On the other hand, generated raw numbers rarely have good statistical properties because entropy sources used in true random number generators can be influenced by environmental factors. Post-processing is required for TRNGs to overcome the shortcomings of generated raw numbers. In this paper, a chaos-based post-processing technique is proposed as an alternative to other post-processing techniques in the literature. Logistic map is used in post-processing to ensure that numbers generated by RO-based TRNG are high quality. Four different scenarios considering RO-based TRNG structure are examined in order to observe the effects of the logistic map. The proposed system is set on EP4CE115F29C7-based Altera FPGA board, and the statistical properties of generated numbers are tested according to NIST 800.22 test suit and TESTU01. The degree of non-periodicity of the developed system was inspected by employing scale index method. The generated series pursuant to the obtained results was non-periodic. The results suggest that logistic map can be used as post-processing.

Keywords True random number generator · Ring oscillator · Post-processing · Scale index · Statistical tests

E. Avaroğlu (✉)
Department of Information Technology, İnönü University, Malatya, Turkey
e-mail: erdinc.avaroglu@inonu.edu.tr

T. Tuncer · A. B. Özer · B. Ergen
Computer Engineering Department, Fırat University, Elazig, Turkey

M. Türk
Electrical and Electronics Engineering Department, Fırat University, Elazig, Turkey

1 Introduction

Key and key generation are most important parameters for the security of cryptographic systems. Key is secret, that is to say that it must be hidden and unpredictable. A key can be predicted by examining irregularities or samples of number streams composing the key. Thus, it is critical to generate true random keys. Generation of random numbers is managed by random number generators. There are two types of random number generators, namely pseudorandom number generator (PRNG) and true random number generator (TRNG) [1,2].

The PRNG uses an initialization vector called as seed to generate numbers in a deterministic way. All PRNGs generate numbers by a deterministic algorithm; thus generated numbers are not true random numbers. Therefore, PRNGs are not appropriate for cryptographic applications [1,2].

A non-deterministic entropy source is required to generate true random numbers. Signals, which are obtained by an entropy source in TRNG designs, are sampled by digitization. After sampling process, post-

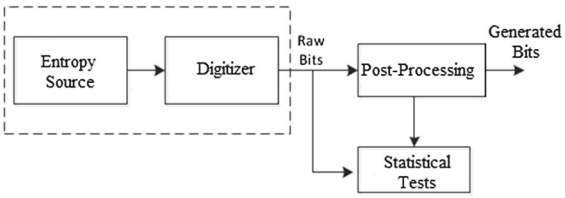

Fig. 1 Essential units of TRNG

processing is applied on generated numbers so that they can be statistically independent.

TRNG consists of three essential units as shown in Fig. 1. These are entropy source, digitizer and post-processing, respectively.

True randomness of TRNGs is completely dependent on entropy source. A high-quality entropy source gives rise to generation of numbers with statistically good properties by TRNG. In the literature, entropy sources can be electrical noise (jitter), mechanical systems and man-made interactions. The digitizer unit receives random signals from noise source and digitizes them. In the literature, periodic sampling, comparator or non-periodic sampling circuits are used as digitizer unit [1]. Post-processing is applied to eliminate the correlation in entropy source and to increase the randomness of signal from entropy source. Another advantage of it is that it makes the system more resistant against side-channel analysis attacks and environmental factors. As a result of eliminating the correlation in number streams by post-processing algorithm, the generator is improved in terms of security. However, post-processing reduces the data rate of number generation despite eliminating correlation in number streams.

Uncontrolled generation of numbers (keys) out of cryptographic systems decreases the security of systems. Thus, it is more desired and secure to generate numbers in an integrated system [3]. Therefore, it has been a common application to generate numbers in programmable hardware such as field programmable gate array (FPGA). Utilization of ring oscillators (ROs) as a randomness source in FPGA is one of the methods for random number generation in TRNG systems. ROs produce clock signals, and variations in the right position of clock signals occur. The variation is called as jitter. The signal period of jitter from RO is equal to $2 \times N \times \tau_p$. N and τ_p represent the number of inverters and the propagation delay of inverter units, respectively. Jitter is usually an undesired property in a system. On the other hand, randomness in its nature makes jitter an ideal tool for TRNGs. Indeed, the jitter from ROs does not have the desired quality [4]. Post-processing is used in order to eliminate this deficiency of the jitter from ROs. Most of the post-processing algorithms proposed in the literature reduce the data rate of TRNGs. In this paper, a new post-processing algorithm that does not decrease the data rate of TRNGs is proposed. It eliminates statistical deficiencies as well. The proposed post-processing is to use a logistic map with chaotic behaviors. The logistic map is actually a first-order equation, and it requires an initialization condition and a control parameter. Therefore, it is easy to implement on the hardware. In this paper, four different scenarios are developed in order to observe the effects of the logistic map on generated numbers in a RO-based TRNG system. RO quantities in TRNG system and inverter quantities are chosen to be (114,13), (25,3), (10,3), (5,3), respectively. The logistic map is used as post-processing in all scenarios, and each scenario is generated on Altera's EP4CE115F29C7-based FPGA board. The statistical tests of generated numbers in each system are done according to NIST 800.22 test suit. The test results show that logistic map can be used as post-processing.

The rest of the paper is organized as follows below. In Sect. 2, TRNG and post-processing methods in the literature are mentioned. In Sect. 3, the proposed post-processing algorithm is given and TRNG system with the logistic map is explained. In Sect. 4, designs showing the implementation of the logistic map on FPGA are explained in details. Section 4 also contains simulation and real-time results of generated numbers which are obtained from the proposed system. The scale index, which was employed for determining whether or not the proposed system was non-periodic, is explained in Sect. 5. In Sect. 6, the statistical test results of random numbers are generated in real time in order to verify that generated random numbers can be used in cryptographic systems. The statistical test is applied according to NIST 800.22 test suite and TESTU01. In conclusion section, benefits and drawbacks of the system are mentioned. Statistical tests are discussed in this section as well.

2 Related works

Various post-processing algorithms were proposed to improve statistical properties of generated random

numbers in TRNG systems. Some of these are XOR corrector [5], Von Neumann corrector [6], H-function [7], SHA-1 [8] and resilient functions [9]. XOR and Von Neumann post-processing algorithms are commonly used in TRNG systems due to the ease of application. While XOR eliminates the correlation in output numbers, it decreases the data rate by half. The advantage of XOR as post-processing is the ease of usage. The disadvantage of XOR is that it does not guarantee the security of TRNG systems against attacks [5].

Von Neumann algorithm is the oldest and the simplest post-processing method. It is an ideal method to improve irregularities in number streams. Uniformly distributed 0 and 1 numbers are obtained by Von Neumann post-processing. Von Neumann algorithm regards only consequent number pairs generated by TRNG. If the array generated by TRNG is (1,0), 1 is generated. If the array generated by TRNG is (0,1), 0 is generated. Besides, (0,0) and (1,1) number pairs are discarded. This application makes entropy approach to the ideal value of 1 and fixes errors resulting from entropy. Nevertheless, the disadvantage of Von Neumann post-processing is that some number pairs generated by TRNG are discarded. This is the reason that the data rate of TRNG system is not constant. The data rate is decreased to 1/4 of the initial data rate in the ideal case.

More developed post-processing algorithms are also proposed in the literature. In Intel TRNG [8], one of the earliest designs of TRNG, Von Neumann and SHA-1 post-processing is used together. Thermal noise source is used as a noise source in Intel TRNG. Two different capacitors are used in the system so that the system is more resistant against environmental factors and power supply of the system. Thermal noise in two different capacitors is amplified and transmitted to the oscillator which is with voltage control. In this system, the statistical properties of numbers after digitization are not sufficiently good. Therefore, numbers are firstly post-processed by Von Neumann algorithm; then, SHA-1 algorithm is applied on numbers to improve the statistical properties of numbers. Generated numbers in this system are successful in FIPS 140-1 test. Although the post-processing techniques used in this configuration are cryptographically sufficient, they are quite complex.

In another study by Sunar [9], resilient function is used as post-processing in a RO-based TRNG system. The entropy source in this study is jitter from ROs. The system in this study consists of 114 ROs (each of them having 13 inverters), XOR, digitizer (sampling unit) and resilient function. High number of ROs results in high power consumption, and dependent ROs give rise to low randomness and output numbers with correlation. This is the reason that generated number streams are post-processed by resilient function. The data rate of TRNG is decreased to 1/16 of the initial data rate due to post-processing by resilient function. The resilient function in this study has a simpler structure compared with the post-processing in Intel TRNG, but it is weaker in terms of cryptography.

There are TRNG designs with ROs as entropy source in the literature, and these designs have various post-processing methods. The TRNG system by [10] includes ring oscillator with two transparent latches, buffer and an inverter. The output from TRNG is post-processed by XOR method. Hence, data rate is low, and the ratio of generated numbers is lower than 1 Mnumber/s. Another TRNG proposed by [11] includes Galois ring oscillator (GARO) and Fibonacci ring oscillator (FIRO). Outputs from GARO and FIRO are connected in XOR, and random numbers are generated from digitized output of XOR by D flip-flop. The output number stream passes through post-processing based on linear feedback shift register (LFSR). The number rate in this design is 12.5 Mnumber/s. The system designed by [12] and [9] is configured on Xilinx Virtex II Pro FPGA. Number of ROs and inverters is (110,3), (110,13) and (210,3), respectively. The system with 210 ROs and 3 inverters is determined to be the strongest noise source. Outputs are post-processed by resilient function, and output rate is 2 Mnumber/s.

3 Proposed post-processing

Chaos is a deterministic and random process presented in nonlinear dynamic systems. Chaos and cryptology have common features such as having random behavior, being unpredictable, dependency on initial conditions and control parameters. The relation between chaos and cryptology has arisen from the following overlapping features: Any encrypting system must have confusion and diffusion properties in order to be secure, chaotic systems are sensitive for initial conditions, and they have nonlinear features. There have been many studies about common usage of chaos and cryptology in the literature [13–17].

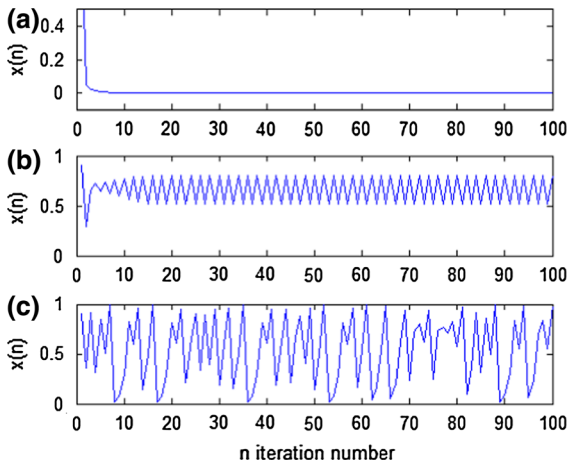

Fig. 2 **a** $r = 0.5$ **b** $r = 3.2$ **c** $r = 3.9$

The simplest structure of logistic map having chaotic behavior is defined by the equation below.

$$x(n+1) = rx(n)(1 - x(n)) \quad (1)$$

In this Eq. (1), $0 \leq x(n) \leq 1$ condition has to be satisfied. In addition to this, r is system parameter and n is number of iterations. The value of $x(n)$ is computed by choosing the seed (initialization value), $x(0)$. The system might have different behaviors depending on r parameter. In Fig. 2, $x(n)$ values computed for iteration numbers and $r = 0.5, r = 3.2 and r = 3.9$ are given.

In Fig. 2, it can be seen that the system exhinumbers stabile behavior for $r = 0.5$; the system output is oscillating for $r = 3.2$; and the system has chaotic behavior for $r = 3.9$.

Different number arrays can be generated by changing the initial condition in logistic map [18]. When logistic map is applied as post-processing on generated numbers from TRNG, numbers are to be altered regarding to structure of logistic map. This alteration is more effective compared with other post-processing methods since logistic map is a nonlinear function unlike XOR or resilient functions. This advantage allows logistic map to be used as post-processing. Systems, which utilize logistic map, are more secure against attacks due to the fact that different numbers can be generated depending on the initialization condition. In other words, it is harder to find out the relation between numbers despite simple generation of numbers by the system.

In this paper, RO-based TRNG system proposed by Sunar is used in order to show the usage of logistic map as post-processing. Figure 3a demonstrates the model by Sunar, and Fig. 3b shows the proposed system.

The system in Fig. 3a includes 114 ROs and 13 inverters for each RO. Random signals from RO are combined in XOR process. Signals after XOR process are digitized by D flip-flop. Resilient function is used in post-processing in order to improve the statistical properties of numbers in the design by Sunar [9].

The difference between the proposed system in Fig. 3b and the system suggested by Sunar is that post-processing is done by logistic map instead of resilient function. The proposed system is run on FPGA board for four different scenarios to observe the effects of logistic map on the system. The statistical tests of numbers generated by each system are carried out according to NIST 800.22 test suite.

4 The implementation

The proposed system is run on FPGA board. In this section, RO and logistic map designs implemented in the system are explained in details. Figure 4 shows the RO structure on FPGA board. Each RO in the system is programmed in VHDL; data flow and schematic design methods are used for ROs.

In Fig. 4, the inverter output is always at 0 logic level. In order to generate a random signal, RO output is obtained by receiving an excitation signal (sel = 1) from physical ambiance. Digitization of the change in random signal completes the random number generation process. However, usage of RO as an entropy source leads to number streams with correlation. Post-processing is benefited to eliminate the disadvantage of number streams with correlation. The implementation of logistic map for post-processing on FPGA board is given in Fig. 5.

Ready-to-use modules by Altera are used to apply logistic map [19]. These modules, which are able to do calculations with floating-point numbers, are Lmp_constant, Altfp_mult and Altfp_add_dub. These modules can, respectively, do the following operations: displaying constant floating-point numbers, multiplication and addition. Besides, the multiplexer (mux) used in the system is designed by data flow architecture in VHSIC hardware description language (VHDL). The multiplexer enables xn, the output value, to be used as the system input in the next iteration so that the system can continuously generate random numbers.

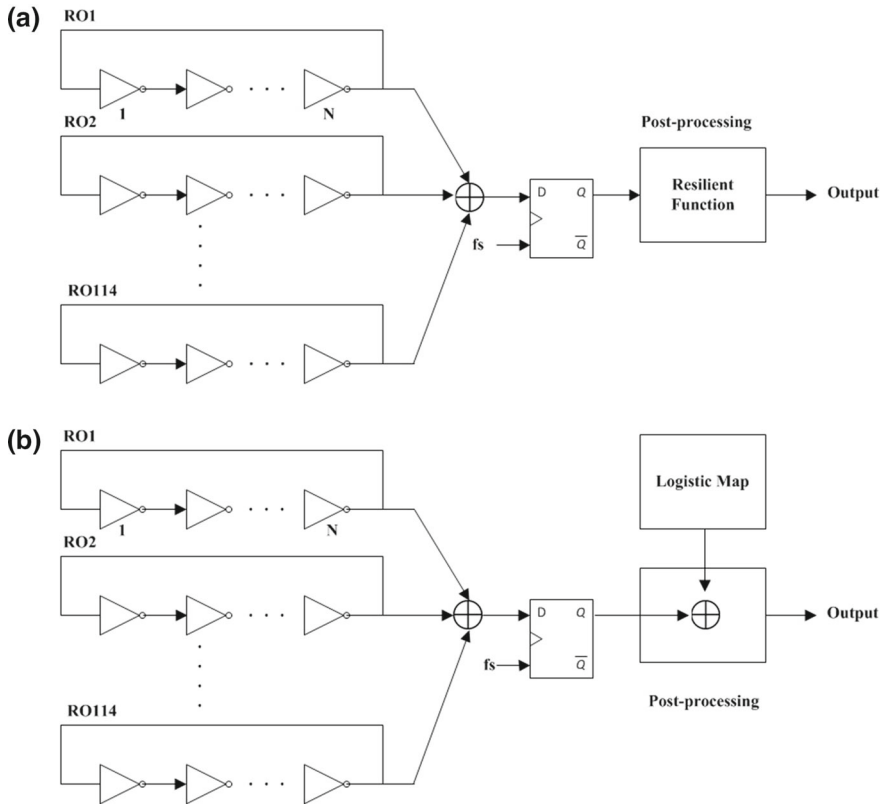

Fig. 3 **a** TRNG model by Sunar [9]. **b** Post-processing model based on logistic map

Firstly, the initial value of the system, the seed value, is loaded. For instance, the value of Lmp_constant1 module is loaded as 0.1 or as $(3DCCCCCD)_H$ in floating-point display. Figure 6 shows the output value of the system corresponding to 0.1 seed value. Figure 7 shows number values generated by the logistic map for ongoing iterations for a value of $r = 3.99$. The generated numbers are given to a basic comparator circuit. The comparator circuit assigns 1 for numbers >0.5, and 0 for the rest. All the modules used in the system, which are Altfp_mult0, Altfp_mult1 and Altfp_add_sub, release output in 11 clock time units. Altfp_mult0 and Altfp_add_sub modules operate simultaneously; thus, each random number is generated in 22 clock time units. Each number is generated in 0.048888 µsn since the clock rate of the system is 450 MHz.

Numbers generated by the system are 32 numbers. The most common way of representing real numbers is the IEEE 754 floating-point format. Floating-point numbers are demonstrated in three components. These are sign component, exponent and mantissa. Sign number (S) is 0 for positive numbers and 1 for negative numbers. Exponent (E) can represent both positive and negative numbers. In order to represent exponent, bias value is summed with exponent value. M represents mantissa numbers. It includes numbers showing integer and fractional digits of numbers. Floating-point number format is expressed as in Eq. (2).

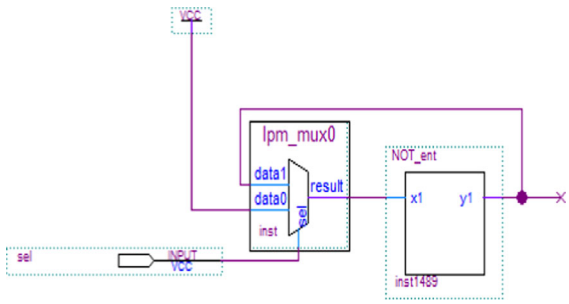

Fig. 4 Ring oscillator

$$\text{Number value} = (-1)^S \times 2^{E-127} \times (1.M) \quad (2)$$

The floating-point correspondence of initial value $(3EB3B646)_H$, which is generated by the system, will be 00111110101100111011011001000110 = 0.351 according to hexadecimal numeral system.

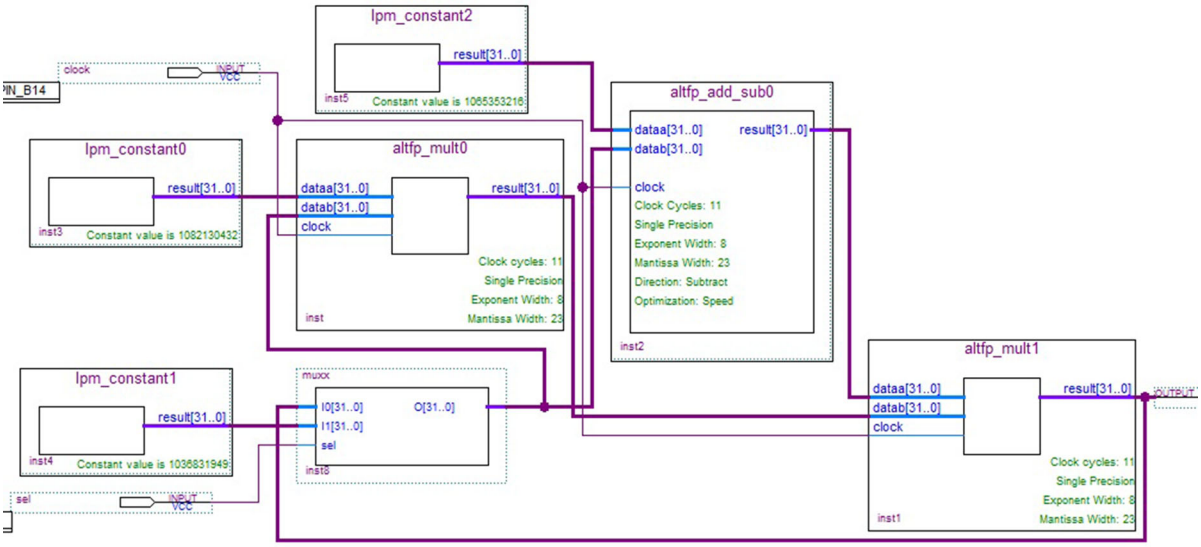

Fig. 5 Implementation of logistic map on FPGA board

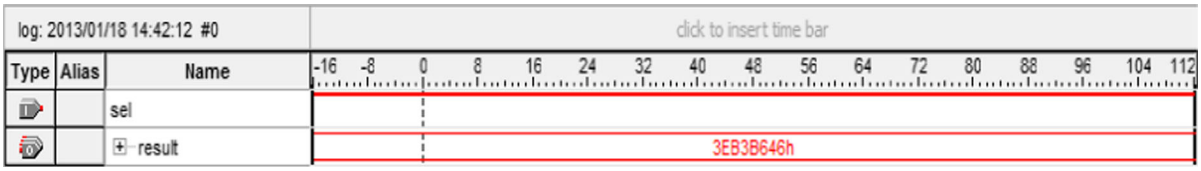

Fig. 6 Initial state of the system

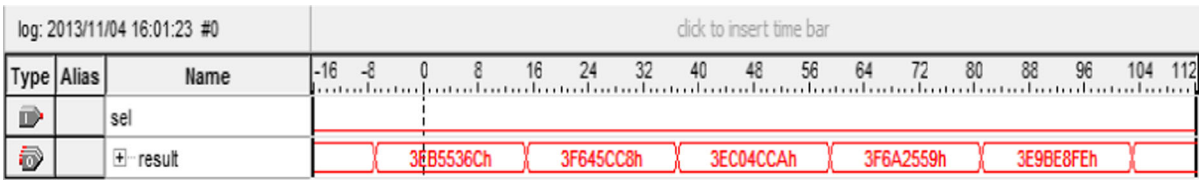

Fig. 7 Generated random numbers

This value is lower than 0.5; thus, logistic map will firstly generate 0.

Numbers generated by the proposed TRNG system and by logistic map are inputted into two-gate XOR unit (logic 1 and logic 0). Logistic map operating at 450 MHz generates one number in every 22 clock time units. In other words, the system should generate a real number in every 0.04888 µsn. Therefore, the frequency of number generated by TRNG has to be 20.45 MHz. Phase locked loop (PLL) is used to obtain 450 and 20.45 MHz frequencies in the system.

Numbers from XOR output are stored in a memory element so that statistical tests can be applied on them. The hardware developed for this purpose can be seen in Fig. 8. Addresses of numbers to be stored in memory addresses are specified by a counter.

The change in random numbers is shown in Fig. 9 according to simulation results of the system. The set allowing real-time runs of the system and application of tests is shown in Fig. 10a. Number changes obtained from the system are given in Fig. 10b.

5 Determination of the degree of non-periodicity of the proposed system

The scale index technique, which enables the obtaining of information about the degree of non-periodicity of a signal or generated number series, was proposed

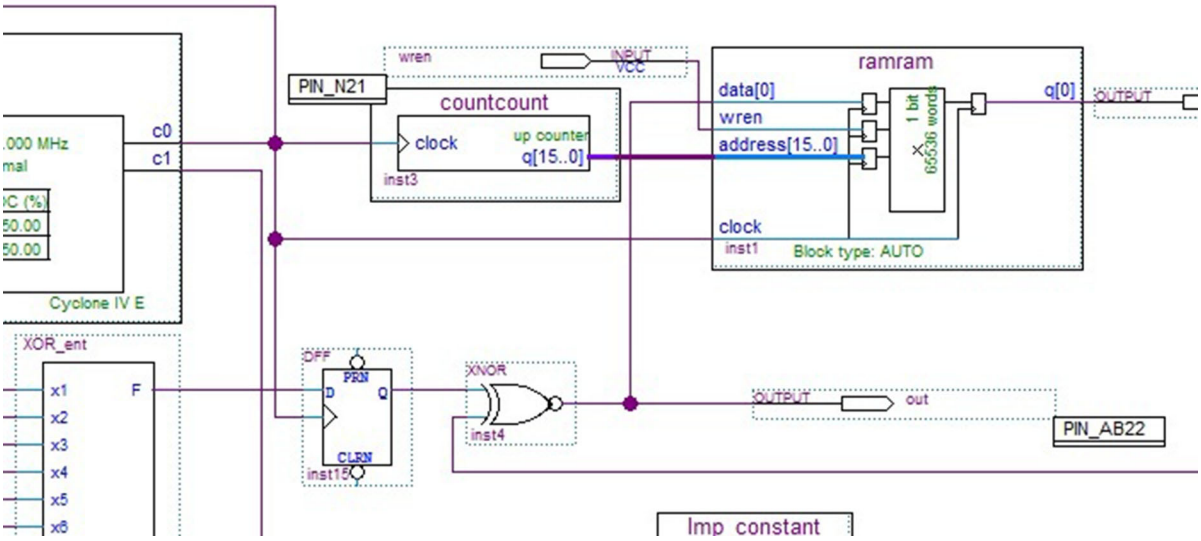

Fig. 8 Digitizer unit and hardware structure developed to store generated numbers in memory unit

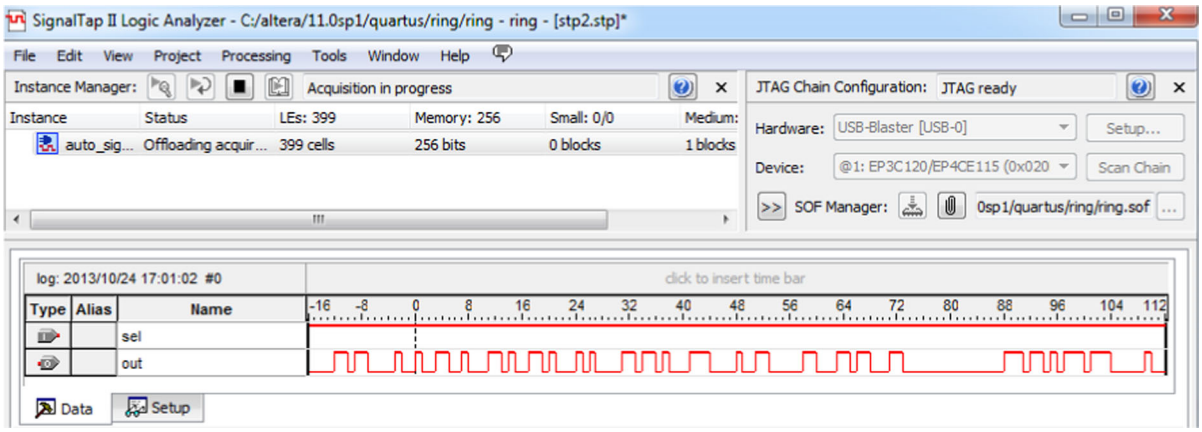

Fig. 9 Random numbers generated in the system

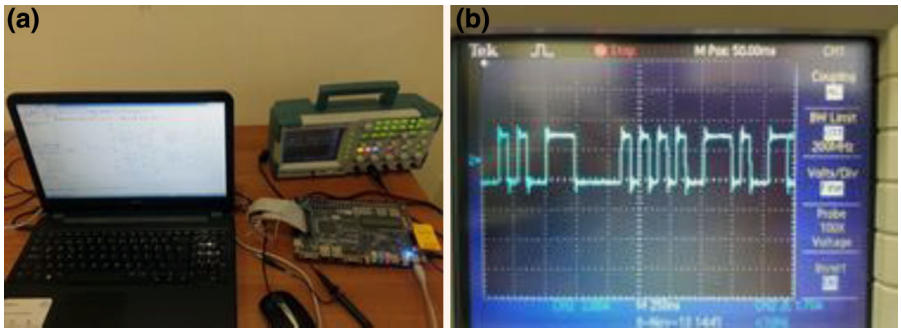

Fig. 10 **a** A view of experimental setup. **b** Numbers generated in real time

by Benitez [20]. This technique has been employed for determining the periodicity of chaotic maps such as henon map, logistic map [20] and quantum map [21]. The employed technique was based on the continuous wavelet transform and wavelet multiresolution analyses. The method employed for determining the degree

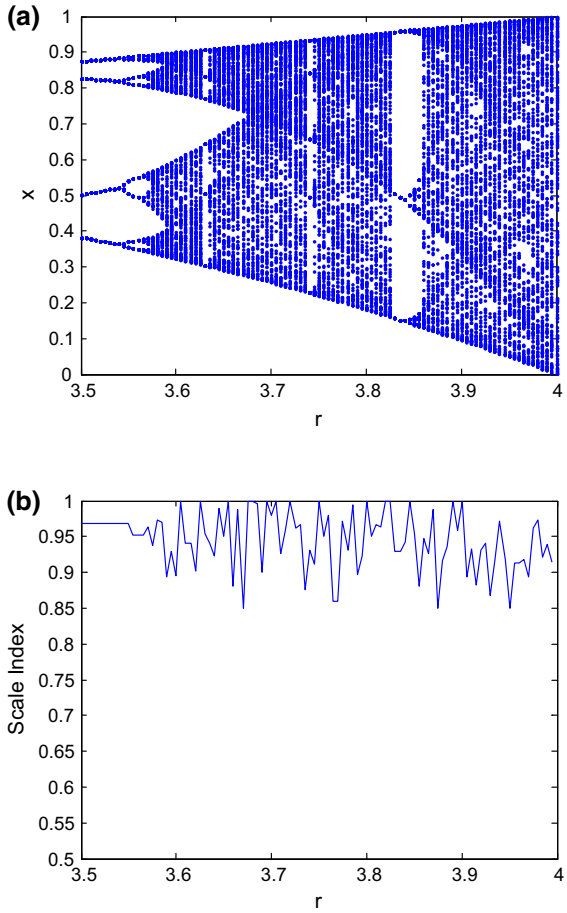

Fig. 11 **a** Logistic map bifurcation diagram. **b** Scale index degree of the proposed system

of periodicity of the system is given below [21]. The scale s and f at time u in the continuous wavelet transform (CWT) and scalogram were defined as shown in Eqs. 3 and 4 [20,21].

$$Wf\,(u,s) := \langle f, \psi_{u,s}\rangle = \int_{-\infty}^{+\infty} f(t)\psi^*_{u,s}(t)\mathrm{d}t \tag{3}$$

$$S\,(s) := \|Wf(u,s)\| = \left(\int_{-\infty}^{+\infty} |Wf(u,s)|^2\,\mathrm{d}u\right) \tag{4}$$

$S(s)$ is the continuous wavelet transform's energy of f at a scale s. The inner scalogram of f at a scale s is defined by Eq. 5.

$$S^{\mathrm{in}}\,(s) := \|Wf(u,s)\|_{j(s)} = \left(\int_{c(s)}^{\mathrm{d}(s)} |Wf(u,s)|^2\,\mathrm{d}u\right)^2 \tag{5}$$

where $J(s) = [c(s), \mathrm{d}(s)] \subseteq I$ shows the maximal subinterval in I. Here, the support of $\psi_{u,s}$ is included in I for all $u \in j(s)$. Considering that the length of $J(s)$ depends on the scale s, the inner scalogram values at different scales cannot be compared. The normalized $\bar{S}^{\mathrm{in}}$ is defined as shown in Eq. 6.

$$\bar{S}^{\mathrm{in}}\,(s) = \frac{S^{\mathrm{in}}(s)}{(\mathrm{d}\,(s) - c\,(s))^{\frac{1}{2}}} \tag{6}$$

The scale index of f in the scale interval [s0,s1] can be defined as shown in Eq. 7.

$$i_{\mathrm{scale}} := \frac{S(s_{\mathrm{min}})}{S(s_{\mathrm{max}})} \tag{7}$$

The scale index value i_{scale} should be in the range of $0 \le i_{\mathrm{scale}} \le 1$. If the scale value obtained from the generated system is 0 or near to 0, then the system is defined as periodic, and if 1 or near to 1, then it is defined as non-periodic.

The relationship between the logistic map bifurcation diagram and the scale index was evaluated in Benitez's study [20]. For the cases that the logistic map was not chaotic, hence periodic, the scale index value was obtained as 0 or near to 0. In this paper, whether or not the bit series obtained from the proposed system's outputs were non-periodic was evaluated with regard to the scale index. For this purpose, 100 different bit series were obtained from the proposed system's output with increments of 0.005 within the logistic map's r parameter range [3.5–4]. These bit series were obtained with the condition that TRNG has 5 RO and 3 inverters. The scale index and logistic map bifurcation diagram obtained by employing bit series are given in Fig. 11. In Fig. 11a, the logistic map displays non-chaotic (periodic) behavior within [3.5–3.58], [3.62–3.63], [3.73–3.74] and [3.82–3.86] ranges. As seen in Fig. 11b, it was revealed that the obtained outputs' scale index values are 1 or near to 1 in even in the non-chaotic regions of the logistic map.

6 Experimental results

True random number generation is achieved on FPGA board by utilizing jitter from RO. This system is proposed by Sunar and others. The system proposed by Sunar cannot pass tests without post-processing since correlation exists in number streams generated by entropy source. As a result of this, resilient function is applied as post-processing. However, it decreases the output speed and data rate to 1/16 of the initial

Table 1 Statistical test results of the model without post-processing by Sunar and the developed model

Test	The TRNG design by Sunar without post-processing		The proposed TRNG design of Sunar with post-processing	
	P value	Result	*P* value	Result
Frequency	–	No passed	0.043	Passed
Frequency test within a block	–	No passed	0.326	Passed
Runs	–	No passed	0.981	Passed
Test for the longest run of ones in a block	–	No passed	0.128	Passed
Binary matrix rank	0.424	Passed	0.785	Passed
Discrete Fourier transform	–	No passed	0.089	Passed
Non-overlapping template matching	–	No passed	0.754	Passed
Overlapping template matching	–	No passed	0.473	Passed
Maurer's universal statistical	–	No passed	0.891	Passed
Linear complexity	0.615	Passed	0.073	Passed
Serial 1	–	No passed	0.908	Passed
Serial 2	0.879	Passed	0.846	Passed
Approximate entropy	–	No passed	0.810	Passed
Cumulative sums	–	No passed	0.066	Passed

Table 2 Test results of the proposed system with logistic map as post-processing with following RO and inverter numbers (25,3), (10,3) and (5,3)

Test	25 RO 3 Inverter *P* value	10 RO 3 Inverter *P* value	5 RO 3 Inverter *P* value	Result
Frequency	0.814	0.360	0.222	Passed
Frequency test within a block	0.329	0.901	0.673	Passed
Runs	0.950	0.647	0.099	Passed
Test for the longest run of ones in a block	0.702	0.920	0.879	Passed
Binary matrix rank	0.210	0.628	0.171	Passed
Discrete Fourier transform	0.504	0.757	0.478	Passed
Non-overlapping template matching	0.815	0.087	0.670	Passed
Overlapping template matching	0.241	0.186	0.375	Passed
Maurer's universal statistical	0.088	0.526	0.721	Passed
Linear complexity	0.745	0.859	0.150	Passed
Serial 1	0.353	0.650	0.625	Passed
Serial 2	0.024	0.387	0.496	Passed
Approximate entropy test	0.921	0.682	0.622	Passed
Cumulative sums test	0.934	0.622	0.236	Passed

data rate. Thus, logistic map is suggested as a post-processing method to overcome the deficiency of low data rate. TRNG system will be safer since logistic map improves randomness features of the system as well. While the system proposed by Sunar has an output rate of 2.5 Mnumber/s, output rate of the developed system is approximately 20 Mnumber/s.

The developed system is subject to randomness tests in order to be safely used in cryptographic applications. Many test suites have been developed to analyze

Table 3 TESTU01 test results of the proposed system with logistic map as post-processing with following RO and inverter number (5,3)

Battery	Parameters	Number of statics	Result
Small crush	Standard	15	Passed
Crush	Standard	144	Passed
Big crush	Standard	160	Passed

whether generated numbers are random. One of these tests is NIST 800.22 test suite. There are totally 16 tests in NIST 800.22 test suite, and parameters of each test are explained in details in [22]. Statistical tests of generated numbers are done by the developed software [23]. Tables 1 and 2 include statistical test results of NIST 800.22 test suite below. Table 1 contains system results given in Fig. 3a, b. The number of ROs and inverters in these tests is 114 and 13, respectively. The proposed system in Table 1 succeeds in all NIST tests. Due to the success in NIST tests, TRNG system is simplified. The pairs of RO numbers and inverter numbers in each RO are chosen as (25,3), (10,3) and (5,3), respectively. Table 2 shows the results of these designs in NIST 800.22 test suite. Successful results are obtained in all designs. To verify the statistical properties of the series of numbers is the another statistical test known in the literature TESTU01 [24]. The TESTU01 test results are given in Table 3. Results suggest that logistic map can be used as post-processing since number streams can be generated without correlation.

7 Conclusion

Logistic map is utilized in the system so that randomly generated number streams can be uncorrelated and high-speed data output rate can be achieved. The system is separately developed for four different scenarios. Numbers obtained from each scenario are subjected to NIST test suite and TESTU01, and successful results are achieved. It is appropriate to use randomly generated number streams in cryptographic applications according to results of NIST test suite and TESTU01.

The degree of non-periodicity of the proposed system was determined in accordance with scale index. The bit series obtained by the system showed non-periodic properties.

High-quality random numbers are generated by the application of logistic map. Besides, number of ROs and inverters can be reduced. It is a disadvantage that the system has high power consumption. On the other hand, the usage of logistic map as post-processing enables more secure system against attacks. While many post-processing methods in the literature decrease the data rate, the proposed post-processing does not reduce the data rate. Another benefit of this system is that correlation arising from randomness source can be eliminated by the usage of logistic map. Test results state that TRNG structure can be altered to be a simpler structure. These results are also shown by statistical tests.

References

1. Koç, Ç.: Cryptographic Engineering. Springer, Berlin (2009)
2. Özkaynak, F.: Cryptographically secure random number generator with chaotic additional input. Nonlinear Dyn. (2014). doi:10.1007/s11071-014-1591-y
3. Ais 31: Functionality classes and evaluation methodology for physical random number generators. Version 1 (25.09.2001), Tech. Rep. (2001)
4. Yoo, S.-K., Karakoyunlu, D., Birand, B., Sunar, B.: Improving the robustness of ring oscillator TRNGs. TRETS **3**(2), 9 (2010)
5. Davies, R.B. : Exclusive OR (XOR) and Hardware Random Number Generators. pp. 1–11, 28 Feb 2002. http://webnz.com/robert
6. Suresh, V.B., Burleson, W.P. : Entropy extraction in metastability-based TRNG. Hardware-oriented security and trust (HOST). In: 2010 IEEE International Symposium on, pp. 135–140 (13–14 June 2010)
7. Dichtl, M.: Bad and good ways of post-processing biased physical random numbers. Fast Softw. Encryption **4593**, 137–152 (2007)
8. Jun, B., Kocher, P. : The Intel random number generator. White Paper Prepared for Intel Corporation (1999)
9. Sunar, B., Martin, W.J., Stinson, D.R.: A Provably secure true random generator with built-in tolerance to active attacks. In: IEEE Transaction On Computers, vol. 56, No.1 (2007)
10. Kohlbrenner, P., Gaj, K. : An embedded true random number generator for FPGAs. International symposium on field programmable gate arrays. In: Proceedings of the 2004 ACM/SIGDA 12th international symposium on Field programmable gate arrays, pp. 71–78, ACM Press, New York (2004)
11. Golic, J.D.: New methods for digital generation and post-processing of random data. IEEE Trans. Comput. **55**(10), 1217–1229 (2006)
12. Schellekens, D., Preneel, B., Verbauwhede : FPGA vendor agnostic true random number generator. In: Proceedings of the 16th International Conference on Field-Programmable Logic and Applications (FPL'06) (2006), IEEE, pp. 1–6 (2006)

13. Özkaynak, F., Özer, A.B., Yavuz, S.: Cryptanalysis of a novel image encryption scheme based on improved hyperchaotic sequences. Opt. Commun. **285**(24), 4946–4948 (2012)
14. Özkaynak, F., Özer, A.B.: A method for designing strong S-boxes based on chaotic Lorenz system. Phys. Lett. A **374**(36), 3733–3738 (2010)
15. Mirzaei, O., Yaghoobi, M., Irani, H.: A new image encryption method: parallel sub-image encryption with hyper chaos. Nonlinear Dyn. **67**(1), 557–566 (2012)
16. Tuncer, T., Avaroğlu, E., Türk, M., Özer, A.B.: Implementation of non-periodic sampling true random number generator on FPGA. J. Microelectron. Electron. Compon. Mater. **44**(4), 296–302 (2014)
17. Avaroğlu, E., Tuncer, T., Özer, A.B., Türk, M.: A new method for hybrid pseudo random number generator. J. Microelectron. Electron. Compon. Mater. **4**(4), 303–311 (2014)
18. Alatas, B., Akin, E., Özer, A.B.: Kaotik Haritalı Parçacık Sürü Optimizasyon Algoritmaları. XII. Elektrik Elektronik Bilgisayar Biyomedikal Mühendisliği Ulusal Kongresi. Eskişehir Osmangazi Üniversitesi, Eskişehir (2007)
19. Tuncer T., Celik, V. : Hybrid PRNG based on logistic map. In: Signal Processing and Communications Applications Conference (SIU), 2013 21st, pp. 1–4 (2013)
20. Benìtez, R., Bolos, V.J., Ramìrez, M.E.: A wavelet-based tool for studying non-periodicity. Comput. Math. Appl. **60**, 634 (2010)
21. Akhshani, A., Akhavan, A., Mobaraki, A., Lim, S.-C., Hassan, Z.: Pseudo random number generator based on quantum chaotic map. Commun. Nonlinear Sci. Numer. Simulat. **19**, 101–111 (2014)
22. A statistical test suite for random and pseudo random number generators for cryptographic applications; 2010: April [NIST 800–22 Rev 1a]
23. Avaroğlu, E., Özer, A.B., Türk, M.: İstatistiki Uygulamalar Için Kaos Tabanli Yeni Bir Rasgele Sayi Üreteci, 2. Uluslararası Karmaşık Dinamik Sistemler ve Uygulamaları Çalıştayı. Işık Üniversitesi, Istanbul (2013)
24. L'Ecuyer P., R. Simard, TestU01: A C Library for Empirical Testing of Random Number Generators ACM Transactions on Mathematical Software, Vol. 33, article 22, 2007