An Area Efficient True Random Number Generator Based on Modified Ring Oscillators

Mehmet Alp Şarkışla and Salih Ergün
TÜBİTAK-Informatics and Information Security Research Center
Gebze, Kocaeli, Turkey
Email: alp.sarkisla@tubitak.gov.tr, salih.ergun@tubitak.gov.tr

***Abstract*— True Random Number Generators (TRNGs) are used in but not limited to neural networks, Monte Carlo calculations and cryptography. Ring oscillator based designs are most common way of implementing random number generators on field-programmable gate arrays (FPGAs). This paper presents new method of implementation of two fully digital modified ring oscillator methods which utilize ring oscillators' wake-up and shut-down time uncertainties. With the added uncertainties, overall entropy is increased, and fulfilling binary random data is obtained using fewer ring oscillators. This makes TRNG area efficient by reducing the number of gates. This method is based on two existing modified ring oscillator models. The circuit is implemented in the FPGA and tested it on National Institute of Standards and Technology (NIST) 800-22 test suite without using any post processing methods. It was shown that wake-up model uses 25%, and sleep model uses 50% fewer ring oscillators compared to classical ring oscillator based TRNGs.**

Keywords; metastability; ring oscillator; FPGA; area efficient TRNG; random number generators

I. INTRODUCTION

Since all cryptographic applications rely on random binary sequences to function, generating unpredictable random numbers is significant in cryptography. These random binary sequences are generated by Random Number Generators (RNGs). The quality of the RNG is important in cryptographic algorithms. A RNG of insufficient quality can weaken an otherwise strong cryptographic system.

RNGs can be divided in two main categories: True Random Number Generators (TRNGs) and Pseudo Random Number Generators (PRNGs) [1]. The main difference is their entropy sources. Entropy of PRNGs comes from a function that has an input called seed, and this seed can be constructed using computer clock[2], hard disk drive turbulence[3] and, output of a TRNG. Entropy of TRNGs comes from thermal noise[4] or quantum sources[5], where the current theories model them as inherently random.

Since PRNGs are inherently deterministic, theoretically they can be predicted with enough observations. Though if implemented correctly, repetition period of PRNGs are quite large ($>2^{256}$), on the other hand, TRNGs are completely non-deterministic. For true randomness, generated numbers must be unpredictable (independent), nonreproducible and must qualify all statistical tests of randomness [6]. Commonly used tests are DIEHARD[7] and National Institute of Standards and Technology(NIST)[8] Test Suites.

During the recent years, number of TRNGs implemented in FPGAs increased because of their reconfigurability and relatively quick implementation time[9]. Main entropy sources in FPGAs are: 1) short-term difference of signal's edges from their ideal positions (jitter), which is caused by time instability of clock signals [10], and 2) uncertainty of the output when it changes its value (metastability) [11].

Ring oscillators are well known method to generate random numbers, and they proved to be an effective and simple method in building TRNG in FPGAs. They are used in many applications with differing nuances [6, 9, 12, 13, 14, 15]. Ring oscillators are based on loops which has odd number of inverters, and they use timing jitter as an entropy source. Outputs of the oscillator rings are then combined using a XOR gate. If the output of the XOR does not fulfill the tests, or quality of the randomness need to be increased, extra post processing methods like Von Neumann corrector [16] can be used.

Wake-up and shut-down uncertainties in [17,18] are used as a base for proposed modified ring oscillator methods. [17,18], increase overall entropy of the system by adding new uncertainties which is created by switching between even and odd number of inverters. Thus, same entropy level that qualifies as random can be achieved using fewer ring oscillators.

Also, the classical enhanced ring oscillator model in [14] is used for comparison. For simplicity, enhanced model from [14] will be referred as classical model for the rest of this paper.

We used Virtex 5 xc5vlx110t evaluation board in our implementation and achieved %25 and %50 decrease in the number of ring oscillators respectively. In this work, two modified ring oscillator methods based on wake-up and shut-down uncertainties [17,18] is proposed and compared with the design in [14]. Modified ring oscillators use shut-down and wake-up uncertainty to increase overall entropy and achieve randomness in less area.

II. STRUCTURAL BACKGROUND OF THE IMPLEMENTED CIRCUIT

A ring oscillator consists of odd number of inverters. The output of the last inverter is connected to the first inverter, so the ring oscillator's output oscillates from high level to low level and low level to high level creating a sinusoidal wave. The period of the generated wave is approximately equal to the sum of the delays of each inverter.

978-1-5386-8240-1/18/$31.00 ©2018 IEEE

Authorized licensed use limited to: INSTITUTO NAL. ASTROFISICA O. Y ELECT (INAOE). Downloaded on December 03,2021 at 00:46:08 UTC from IEEE Xplore. Restrictions apply.

Random fluctuations, jitter, can occur at the output of the ring oscillator. This is caused by thermal and shot noises in the circuit itself. Fluctuation is a very desirable, because it is the source of randomness in random number generation.

III. HARDWARE DESIGN

When synthesized FPGA uses optimization algorithms, ring oscillators synthesizes as one inverter. KEEP constraint is used to avoid this [19]. This prevents net from being absorbed into a logic block. Also, equalizing the ring to XOR wire delay all ring oscillators placed manually.

In this work, Shut-Down and Wake-Up Ring oscillators are implemented and compared with classical ring oscillator. All designs are implemented in Virtex 5 xc5vlx110t evaluation board and tested in NIST 800-22 test suite without using any post processing method. Our sampling frequency is 4 MHz.

A. Classiccal Ring Oscillator

Classical ring oscillator model in Figure 1 is used as a base comparison model. Model is proposed by [14], in which adding an extra D flip-flop after each ring results in better outcome. This way, inputs of the XOR will be synchronous with the clock, and they will only be updated once in a period. This carries setup and hold times in FPGA to acceptable limits. For this reason, D flip flops after each ring is also used in proposed methods.

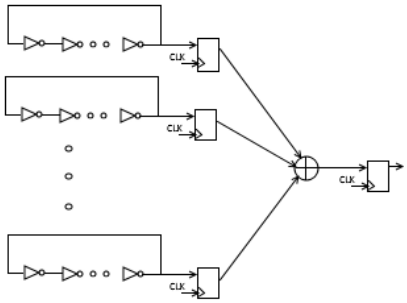

Figure 1. TRNG based on equal length oscillator rings. One ring (13 inverters and DFF) is in one P block.

Classical ring oscillator uses only ring oscillator timing jitter as an entropy source. Proposed methods combines ring oscillator jitter with wake-up and shut-down uncertainties to achieve true randomness using fewer number of rings. Output of one ring and sampling pulse can be observed in Figure 2.

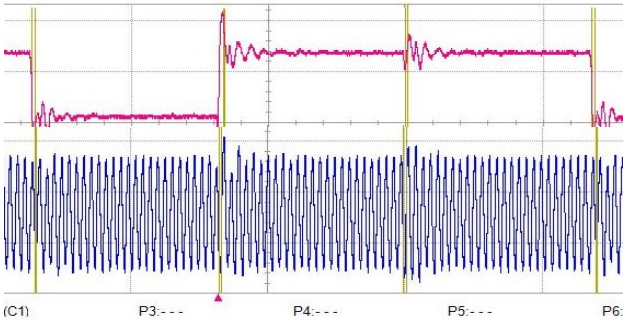

Figure 2. **Yellow:** 4 MHz sample pulse, **Red:** Output of the last DFF (collected data), **Blue:** Output of one ring oscillator.

All designs started with 114 oscillator rings where all rings have 13 inverters and then number of ring oscillators is gradually decreased. Then we note the minimum number of Look Up Tables (LUTs) and ring oscillators that satisfy the NIST test suite.

To make ring to XOR wire equal length Xilinx Plan Ahead Place & Route is used. 114 ring version of the classical model can be observed in Figure 3. Each P block consists of one ring that has 13 inverters and a D Flip-Flop. In parts B and C, P blocks also have 2 to 1 multiplexer. Schematics of ring oscillators can be observed in Figure 1 and 4.

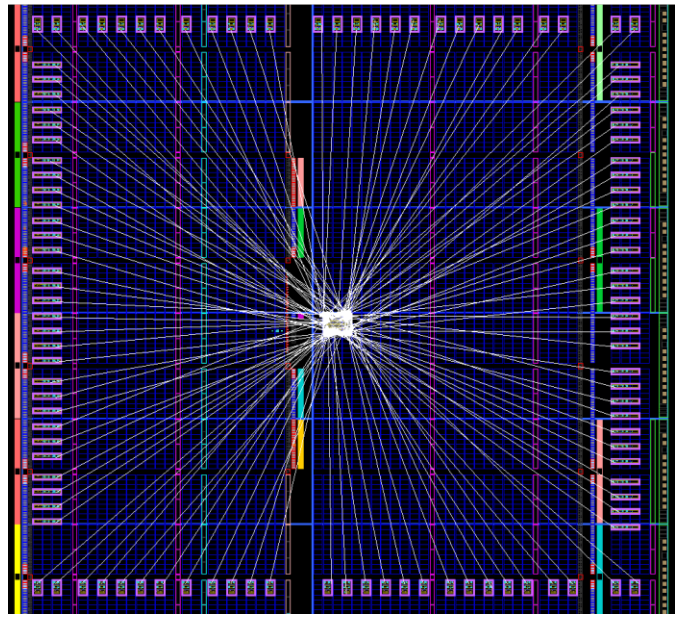

Figure 3. Floor plan for 114 ring oscillators, each rectangle (P block) consist of one ring oscillator that has 13 inverters and a D-type Flip-Flop (DFF).

After decreasing the number of ring oscillators gradually, we managed to get fulfilling results from minimum of 20 rings. So, final classical ring oscillator design consists of: 1) 100Mhz clock to 4Mhz sample clock Xilinx Digital Clock Manager (DMC) module, 2) 20 ring oscillators x (13 inverters + 1 DFF), 3) 20 to 1 XOR gate, 4) 1 DFF which is equivalent to 27 Slice Registers and 291 Slice Look up Tables (LUTs).

B. Shut-Down Ring Oscillator

By modifying the ring oscillators in Figure 1, novel method based on shut-down ring oscillator based TRNG is implemented as shown in Figure 4. This method does not count the number of oscillations as [17], instead it samples the output using a D flip-flop. Controller periodically shuts down and wakes up the ring oscillators by changing the number of inverters odd to even and vice versa. In shut-down model, we sample output in its shut-down state and outputs of the gates are processed through XOR gate.

Authorized licensed use limited to: INSTITUTO NAL. ASTROFISICA O. Y ELECT (INAOE). Downloaded on December 03,2021 at 00:46:08 UTC from IEEE Xplore. Restrictions apply.

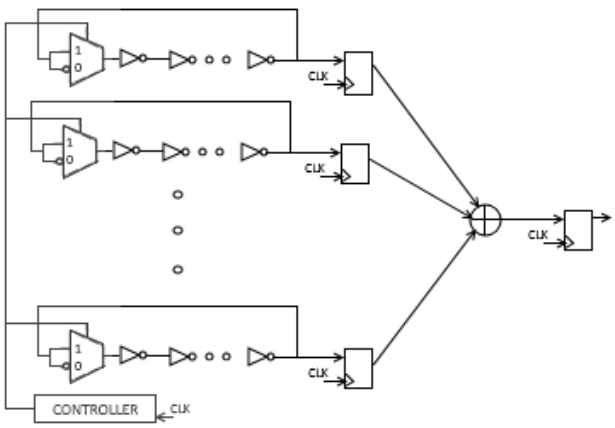

Figure 4. Modified TRNG based on equal length oscillator rings. One ring (13 inverters, a DFF and a 2 to 1 multiplexer) is in one P block.

Ring oscillator oscillates differently each time before settles down to a certain value (logic 1 or 0). By sampling it while it shuts down overall entropy is increased, and new implementation fulfilled the tests using 15 ring oscillators which corresponds to 23 slice registers and 236 slice LUTs. We experimented on waiting time after sampling and sample time shown in Figure 5 gave best results for shut-down ring oscillator.

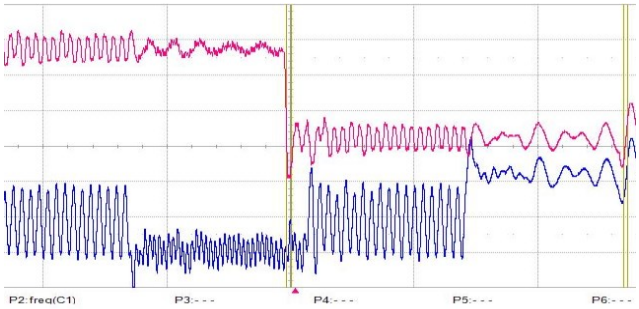

Figure 5. **Yellow:** 4 MHz sample pulse, **Red:** Output of the last DFF (collected data), **Blue:** Output of one ring oscillator.

C. *Wake-Up Ring Oscillator*

Wake-Up model adds wake-up uncertainty jitter [18] to already existing oscillation jitter which results in increased entropy. This model fulfilled in the NIST test using 10 ring oscillators (19 Slice Registers, 160 Slice LUTs).

Note that both wake-up ring oscillator and design in [18] is combines wake-up uncertainty jitter with ring oscillators that own induced jitter. However, both designs are drastically different, design in [18] is an on chip design and it uses many hardware blocks such as Voltage Controlled Oscillator (VCO) and clocked comparator and it only uses one ring, whereas proposed design does not require such blocks and uses multiple rings. Also, it doesn't need any post processing to pass all the tests since increased jitter comes with XOR and D flip-flop after each ring.

Output of one ring and sampling pulse can be observed in Figure 6. Sample time shown in Figure 6 gave best results for wake-up ring oscillator.

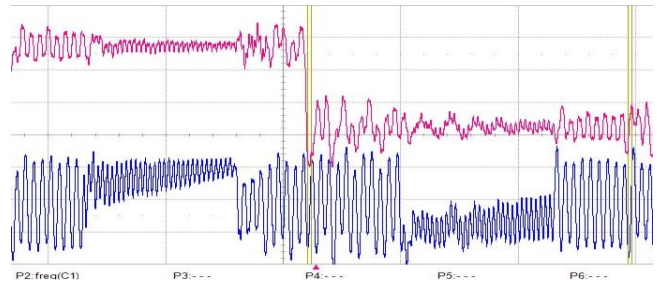

Figure 6. **Yellow:** 4 MHz sample pulse, **Red:** Output of the last DFF (collected data), **Blue:** Output of one ring oscillator.

IV. MEASUREMENT

Data is collected at 4 MHz sampling rate and tested with 320 bitstreams of 1M bits each, 40 MB total size. As previously mentioned NIST 800-22 test is used to quantify the randomness of the collected data.

Statistical test results for Classical, Shut-Down and Wake-Up models are summarized in Table I. All results fulfilled the test successfully.

TABLE I. NIST RESULT OF ALL THREE MODELS

Statistical Test	CLASSICAL		SHUT-DOWN		WAKE-UP	
	P-VALUE	*PASS RATE*	*P-VALUE*	*PASS RATE*	*P-VALUE*	*PASS RATE*
Frequency (/320)	0.984058	315	0.77678	317	0.02364	318
Block Frequency (/320)	0.113706	317	0.00908	319	0.00022	319
Cumilative Sums (/320)	0.995502	317	0.85553	317	0.81199	319
Runs (/320)	0.041438	318	0.44889	316	0.39245	315
Longest Run (/320)	0.306892	317	0.25896	317	0.52160	317
Rank (/320)	0.048716	315	0.00366	318	0.82327	320
FFT (/320)	0.915478	315	0.52160	318	0.35556	316
NonOverlapping Template (/320)	0.953553	319	0.36587	320	0.79462	315
Overlapping Template (/320)	0.117948	318	0.44889	314	0.54045	319
Universal (/320)	0.860655	317	0.54679	317	0.73991	320
Approximate Entropy (/320)	0.280017	190	0.39790	316	0.98251	316
Random Excursions (/190)	0.838872	190	0.71748	183	0.92100	189
Random Excursions Variant (/190)	0.847849	190	0.80433	183	0.99223	189
Serial (/320)	0.231505	319	0.28001	320	0.75852	318
Linear Complexity (/320)	0.572333	316	0.65013	319	0.57233	318
Passed all the tests?	**Passed**		**Passed**		**Passed**	

Authorized licensed use limited to: INSTITUTO NAL. ASTROFISICA O. Y ELECT (INAOE). Downloaded on December 03,2021 at 00:46:08 UTC from IEEE Xplore. Restrictions apply.

We also measured the jitter using oscilloscope's persistency setting as shown in Figure 7. Persistency fixes signals in the middle and prints all fluctuations. Colors represent the occurrence density of the given signals. Jitter is determined by measuring the highest fluctuation interval. Larger jitter corresponds to larger noise and entropy. As expected, shut-down, b, and wake-up, c, both have higher jitter than the classical ring oscillator, a. Also, comparison of jitter, number of ring oscillators, LUTs and registers for all three designs are given in Table II.

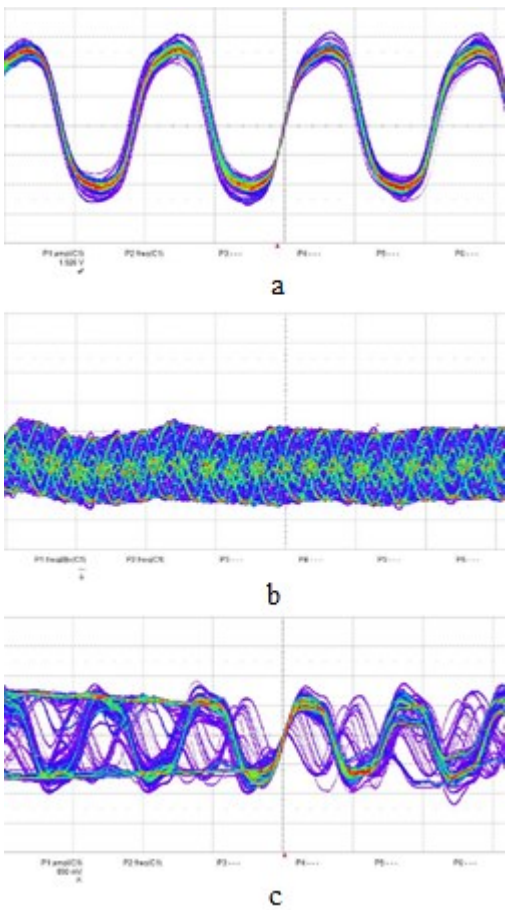

Figure 7. Jitter measurement in the oscilloscope. a) Classical, b) Shut-Down and c) Wake-Up models.

TABLE II. JITTER AND AREA COMPERISON

Type	*CLASSICAL*	*SHUT-DOWN*	*WAKE-UP*
Num. of Ring Oscillators	20	15	10
Num. of Slice Registers	27	23	19
Num. of Slice LUTs	291	236	160
Jitter (%)	~9	~45	~57

V. CONCLUSION

In paper, classical ring oscillator compared with proposed modified models based on the other designs that uses wake-up and shut-down jitter and they both managed to pass the NIST test suite using less number of inverters. Virtex 5 xc5vlx110t evaluation board (FPGA) is used in implementation and %25 and %50 decrease in the number of ring oscillators is achieved using shut-down and wake-up models respectively. These models are new implementations and based on wake-up and shut-down uncertainty jitter techniques suggested in two existing articles. First, working principle of the classical model is explained, followed by an explanation of the proposed models.

Even though number of ring oscillators decreased by 25% and 50%, number of slices didn't decrease as such due to the controller block and added multiplexers. In total we have 15% Slice Register decrease and 19% Slice LUT decrease in the shut-down model and 30% Slice Register decrease and 45% Slice LUT decrease in the wake-up model.

New methods clearly improved the overall entropy, but they are extremely dependent of the sampling time. For example, if we reverse the respective sampling order, that is sample shut-down in the middle and wake-up in the after, they both didn't pass the tests. We found our passing sampling rates via testing.

VI. FUTURE WORK

The future work involves experiment on our newfound model. Design will be improved in order to reduce the dependence on test conditions and to increase the throughput. Throughput can be increased by increasing pulse frequency. The model will also be evaluated in other FPGAs for generality. Then next step will be making application specific (ASIC) design of our models.

REFERENCES

[1] W. Schindler and W. Killmann, "Evaluation Criteria for True (Physical) Random Number Generators Used in Cryptographic Applications," pp. 431–449, 2003.

[2] B. Schneier, *Applied Cryptography*, 2nd ed. John Wiley & Sons, 1996.

[3] D. Davis, R. Ihaka, and P. Fenstermacher, "Cryptographic randomness from air turbulence in disk drives," *Proc. Adv. Cryptol. Conf.*, pp. 114–120, 1994.

[4] N. C. Göv, M. K. Mihçak, and S. Ergün, "True random number generation via sampling from flat band-limited gaussian processes," *IEEE Trans. Circuits Syst. I Regul. Pap.*, vol. 58, no. 5, pp. 1044–1051, 2011.

[5] M. Stipčević, "Quantum random number generators and their use in cryptography," *2011 Proc. 34th Int. Conv. MIPRO*, pp. 1474–1479, 2011.

[6] S. Yıldırım, "A True Random Number Generaor in FPGA for Cryptographic Application," no. December, pp. 40–49, 2012.

[7] George Marsaglia, "DIEHARD: A Battery of Tests of Randomness," 1995. [Online]. Available: http://stat.dsu.edu/pub/diehard/%0A.

Authorized licensed use limited to: INSTITUTO NAL. ASTROFISICA O. Y ELECT (INAOE). Downloaded on December 03,2021 at 00:46:08 UTC from IEEE Xplore. Restrictions apply.

[8] J. Sobotík and V. Plátěnka, "A Statistical Test Suite for Random and Pseudorandom Number Generators for Cryptographic Application," pp. 161–167, 2003.

[9] X. Xu and Y. Wang, "High Speed True Random Number Generator Based on FPGA," *2016 Int. Conf. Inf. Syst. Eng.*, no. 38, pp. 18–21, 2016.

[10] V. Fischer and M. Drutarovský, "True Random Number Generator Embedded in Reconfigurable Hardware," *Cryptogr. Hardw. Embed. Syst.*, pp. 415–430, 2002.

[11] I. Vasyltsov, E. Hambardzumyan, Y. S. Kim, and B. Karpinskyy, "Fast digital TRNG based on metastable ring oscillator," *Lect. Notes Comput. Sci. (including Subser. Lect. Notes Artif. Intell. Lect. Notes Bioinformatics), vol. 5154 LNCS, pp. 164–180, 2008.*

[12] Ü. Güler and S. Ergün, "A high speed, fully digital IC random number generator," AEU - Int. J. Electron. Commun., vol. 66, no. 2, pp. 143–149, 2012.

[13] D. R. Stinson, "A Provably Secure True Random Number Generator with Built-in Tolerance to Active Attacks," IEEE Trans. Comput., vol. 56, no. 1, pp. 109–119, 2007.

[14] K. Wold and C. H. Tan, "Analysis and enhancement of random number generator in FPGA based on oscillator rings," Proc. - 2008 Int. Conf. Reconfigurable Comput. FPGAs, ReConFig 2008, vol. 2009, pp. 385–390, 2008.

[15] M. Varchola and M. Drutarovsky, "New High Entropy Element for FPGA Based True Random Number Generators," Cryptogr. Hardw. Embed. Syst. - CHES 2010. Proc. 12th Int. Work., no. Ches, pp. 351–65, 2010.

[16] B. Jun and P. Kocher, "The Intel random number generator," Cryptogr. Res. Inc. white Pap., vol. 27, no. July 1948, pp. 1–8, 1999.

[17] M. Varchola, "New Method of Randomness Extraction Based on a Modified Ring Oscillator for Cryptographic Trngs Embedded in Fpgas," Varchola.Com.

[18] T. Nakura, M. Ikeda, and K. Asada, "Ring Oscillator Based Random Number Generator Utilizing Wake-up Time Uncertainty," pp. 121–124, 2009.

[19] Xilinx_EDK, "Xilinx Constraints Guide," Constraints, vol. 612, pp. 1–248, 2008.

Authorized licensed use limited to: INSTITUTO NAL. ASTROFISICA O. Y ELECT (INAOE). Downloaded on December 03,2021 at 00:46:08 UTC from IEEE Xplore. Restrictions apply.