Nuclear Inst. and Methods in Physics Research, A 1011 (2021) 165578

Contents lists available at ScienceDirect

Nuclear Inst. and Methods in Physics Research, A

journal homepage: www.elsevier.com/locate/nima

A ring-oscillator based multi-mode time-to-digital converter on Xilinx Kintex-7 FPGA

Jianfeng Zhang, Yonggang Wang *, Zhengqi Song

Department of Modern Physics, University of Science and Technology of China, Hefei 230026, China
State Key Laboratory of Particle Detection and Electronics, University of Science and Technology of China, Hefei 230026, China

ARTICLE INFO

Keywords:
Time-to-digital converter
Vernier
Multi-channel
High-precision
High-throughput

ABSTRACT

Taking the system clock as the reference, a ring-oscillator based Vernier-type time stamping method is proposed for the implementation of time-to-digital converters (TDCs) on field programmable gate array (FPGA). A module with this method called time-marker is implemented on a Xilinx Kintex-7 FPGA and tested with 43 ps time resolution and less than 50 ns measurement dead time. To illustrate this time-marker can be used as the building block for TDC construction to provide high time measurement performance with low resource consumption, a multi-mode TDC using eight time-markers is implemented with performance evaluation. The TDC has three flexible configuration modes for performance enhancements in three aspects. In the multi-channel mode, it becomes eight independent TDC channels with average 34 ps time interval RMS precision and 50 ns measurement dead time; in the high-precision mode, it is one TDC channel with 14 ps RMS precision and 50 ns measurement dead time; and in the high-throughput mode, it is one TDC channel with 33 ps RMS precision and 6.25 ns measurement dead time. In addition, the temperature dependence of the performance is evaluated.

1. Introduction

Time-to-digital converters (TDCs) that realize the conversion of a time interval into a digital word are widely used in various applications such as high-energy physics experiments, biomedical imaging scanners, and all-digital phase-locked loops [1–3]. TDCs can be implemented on either application specific integrated circuits (ASICs) or field programmable gate arrays (FPGAs). For low development cost and fast prototyping, FPGA based TDCs have been extensively investigated in the past two decades [1–6]. At present, the most popular architecture of FPGA-TDCs is to use a tapped delay line (TDL) to achieve the time interpolation within one clock cycle. Through multiple interpolations, the performance that such TDCs can currently achieve is already reasonably high, such as a measurement RMS precision better than 10 ps, and a measurement dead time around several nanoseconds on Xilinx Kintex-7 FPGA [4–6]. However, since the long TDLs, complicated encoder circuits, and even on-line bin-by-bin calibration consume a lot of logic resources, this type of TDC may not be the best choice for occasions with medium performance requirements. It is necessary to investigate a resource-saving TDC structure so that some FPGA based data acquisition systems can have sufficient integration with acceptable power consumption.

Varieties of Vernier TDCs [7–13] that are being extensively investigated by ASIC technology have a resource-saving structure. In a basic Vernier TDC, the start and stop signals of a time interval respectively trigger a ring-oscillator to start oscillating. Since the periods of the two oscillators are slightly different, the stop oscillation eventually catches up with the start oscillation after a certain number of cycles. The time interval to be measured is proportional to the number of cycles. Apparently, the resolution of this basic Vernier TDC is determined by the period difference of the two oscillators. A higher resolution normally leads to a longer measurement dead time because more oscillation cycles are needed to measure the time interval.

Based on ASIC design technology, a number of design techniques have been explored for either improving TDC resolution and linearity or shortening the measurement dead time. For example, to solve the problem of ring-oscillator period being severely affected by process–voltage–temperature (PVT) variations, an extra dedicated delay-locked loop (DLL) is added so that the oscillation stability can be effectively improved [14,15]. To improve the sensitivity of the coincidence circuit to precisely identify the alignment of the two oscillations, a modified sense-amplifier-based flip-flop is studied and widely adopted [7,10,12,16]. Another newly developed method to improve the TDC resolution is the noise shaping technique, in which the traditional ring-oscillators are replaced with the gated ring-oscillators and an over-sampling mechanism is employed [10,13]. To shorten the measurement dead time, the replicas of the two oscillations are arranged for mutual coincidence, so that a 2-dimensional arbiter array is introduced [8,9,11,12], and the

* Corresponding author at: Department of Modern Physics, University of Science and Technology of China, Hefei 230026, China.
E-mail address: wangyg@ustc.edu.cn (Y. Wang).

https://doi.org/10.1016/j.nima.2021.165578
Received 3 April 2021; Received in revised form 21 June 2021; Accepted 21 June 2021
Available online 29 June 2021
0168-9002/© 2021 Elsevier B.V. All rights reserved.

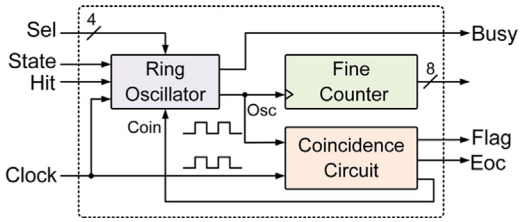

Fig. 1. Composition of the time-marker.

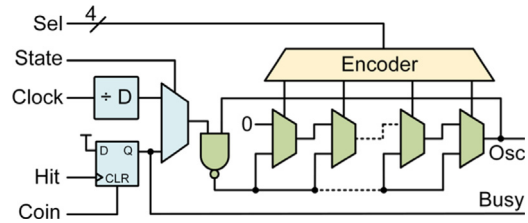

Fig. 2. Schematic diagram of the ring-oscillator.

TDC conversion can be finished as early as possible. However, due to the difficulty of making the oscillation replicas spread with equal time intervals, a large nonlinearity may be produced while shortening the measurement dead time [9].

Without the great design flexibility of ASIC technology, it is difficult to shift all these new techniques to the FPGA implementation of the Vernier TDC. At present, there are only a few tentative research works on it [17–19], and they all follow the basic principle of Vernier TDC without fully exploring possible methods for performance promotion. In this paper, a ring-oscillator based time measurement module on a Xilinx Kintex-7 FPGA is designed, which is called "time-marker" for generating a timestamp relative to the system clock edge for the hit signal. Differently from the basic structure used in [17–19], the oscillation triggered by the hit signal directly catches up with the system clock by aligning with either the clock rising edge or the clock falling edge, so that some factors affecting the measurement precision can be avoided and the measurement dead time can be effectively reduced. Utilizing eight such time-markers, we also developed a multi-mode TDC to demonstrate that the TDC performance can be further improved by the combination of multiple time-markers. Through an easy configuration, the TDC can run as eight independent TDC channels with medium performance, or as one TDC channel with enhanced measurement precision or measurement throughput respectively. The test results confirm that the proposed time-marker is an effective Vernier-type time measurement method. The TDC built on it can be optimized for different performance enhancements to meet the needs from different applications.

2. Time-marker design

2.1. Architecture and circuit design

Using Vernier principle, the time-marker measures the time distance between the hit signal and the preceding transition edge of the system clock. The composition of the time-marker is shown in Fig. 1, which mainly includes a ring-oscillator, an 8 bit fine counter, and a coincidence circuit. The input hit signal triggers the ring-oscillator to start oscillation. Since the oscillation period is slightly smaller than the system clock period, the time distance between them gradually decreases with the increase of oscillation number until the coincidence circuit judges that they become aligned. The number of oscillation cycles in this process is recorded by the fine counter as the time-marking result in units of the time-marking resolution, which is the period difference of the two periodic signals. The coincidence circuit is designed to determine whether the rising edge of the oscillation signal becomes aligned with the rising or falling edge of the system clock signal. Once they become aligned, the circuit module sends out three logic signals as indicated in Fig. 1: one is Coin signal to reset the ring-oscillator, the second is Eoc signal to indicate the end of current conversion, and the third is Flag signal for identifying the coincidence is made with the rising edge or the falling edge of the system clock. With the Flag signal and the output from the fine counter, the position of the hit signal within the system clock cycle can be determined.

The system clock is generated by an external clock chip (Silicon Laboratories Si570) with a frequency of 500 MHz. The principle of time-marker requires the frequency of the ring-oscillator to be slightly higher than the system clock frequency, and their frequency difference determines the time-marking resolution. Utilizing the pre-defined logic resources of FPGA to make the oscillation frequency more deterministic and less position-dependent, a number of dedicated fast carry logics are cascaded to form a programmable delay line in the ring-oscillator as shown in Fig. 2. Each delay element in the delay line is actually a multiplexer that can be controlled to change the transmission length of the ring so that the frequency of the oscillator is programmable. In our design, the 4-bit frequency control word (*Sel* in Fig. 2) is encoded into a 16-bit thermometer code, which can generate 16 different oscillation frequencies.

Because the realistic delay time varies with the location of the circuit inside FPGA, the oscillation frequency must be measured before a certain frequency can be finally chosen by writing a control word. In addition to being triggered by the hit signal, the ring-oscillator is designed to be triggered by the system clock signal through a frequency divider. In the frequency measurement state, the oscillation time length is enlarged as $DT_s/2$, where D is the frequency division number and T_s is the system clock period. During this period of time, supposing the number of oscillation cycles recorded by the fine counter is d and the oscillation period is T_f, then, $DT_s/2 = d\,T_f$. If $D/2 < d$, we know $T_s > T_f$. By repeating the above test over different frequency control words, the most suitable control word can be determined to meet the requirement that T_f is slightly smaller than T_s. In this design, we choose the frequency division number D as 256 and system clock period T_s as 2 ns.

The coincidence circuit is simply realized by a sampling circuit as shown in Fig. 3. By using the rising edge of the oscillation signal to sample the system clock signal and observing the successive sampling results, the alignment between them can be detected. Specifically, the sampling result flipping from 1 to 0 means the oscillation rising edge has aligned with the clock rising edge, and flipping from 0 to 1 means the oscillation rising edge has aligned with the clock falling edge. The flipping also indicates the end of conversion, so that the Eoc signal is generated to reset the ring-oscillator, and validate the Flag signal to indicate what kind of coincidence happened. Six flip-flops (FF0–FF5) are employed to fulfill these tasks and all are reset to 0 by a clear signal before starting the detection. The first two flip-flops (FF0–FF1) and one XOR gate fulfill the detection of the flipping. In order to avoid false output that occurs when the first sampling result is 1, two flip-flops (FF2–FF3) and one AND gate are used to ignore the judgment result of the first sampling. Finally, the judgment results, i.e., Coin signal and Eoc signal, are led out synchronously by two flip-flops (FF4–FF5) driven by the oscillation and system clock respectively.

2.2. Performance evaluation

One time-marker was implemented on a Xilinx Kintex-7 FPGA (xc7k325tffg900) on our home-made circuit board. It only consumes 37 DFFs, 20 LUTs, and 14 CARRY4 logics.

To choose an appropriate oscillation frequency, we switched the time-marker into the frequency measurement state and then adjusted the oscillation frequency by writing different frequency control words.

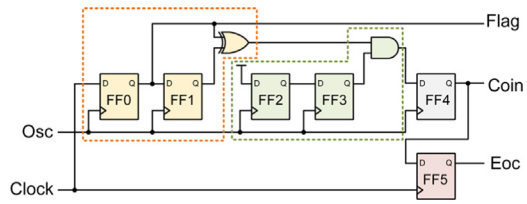

Fig. 3. Schematic diagram of the coincidence circuit.

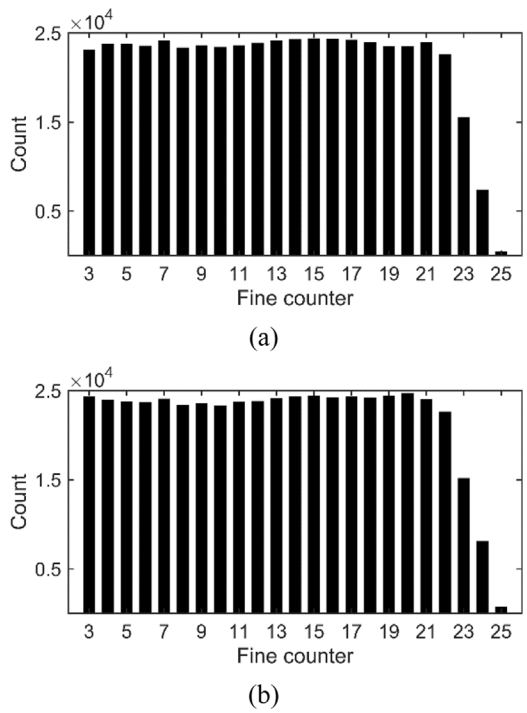

Fig. 4. Measured time-marking bin widths for (a) Flag = 0 and (b) Flag = 1.

The corresponding oscillation numbers were read out by a computer via a universal serial bus (USB) interface. Among the 16 oscillation frequencies, we chose the one that produced an oscillation number of 131 as the final oscillation frequency for the subsequent test.

The code density test [1,6] was applied to evaluate the time-marking performance by using an arbitrary waveform generator (Tektronix AWG5012C) to generate the hit signal. To avoid any correlation between the hit signal and the system clock, the hit signal was generated at 1.010111 MHz frequency and fed into the time-marker via one SMA connector. The outputs of the time-marker were read out and processed on MATLAB platform. Since there is an equal probability of a hit signal arriving at any time within the system clock cycle, the relative numbers of hit signals detected with Flag=0 reflect the duty cycle of the system clock, and the relative numbers of hit signals detected in each bin reflect the time-marking bin widths.

There are 497594 hit signals detected with Flag=0 from one million output results, so the positive half of the system clock T_{sp} can be calculated as 497594/1000000×2 ns = 995 ps. The time-marking bin widths are measured as shown in Fig. 4. There are 23 bins in both two parts and the average bin width is calculated as 995 ps/23 = 43 ps. Taking the two extra clock cycles introduced by the coincidence circuit into account, the maximum dead time is calculated as 25×2 ns = 50 ns. Differential nonlinearity (DNL) and integral nonlinearity (INL) are calculated based on the code density test results. As shown in Fig. 5, the DNL lies in the range of (−0.98 LSB, 0.08LSB) for both Flag = 0 and Flag = 1, and the INL lies in the range of (−1 LSB, 0.97 LSB).

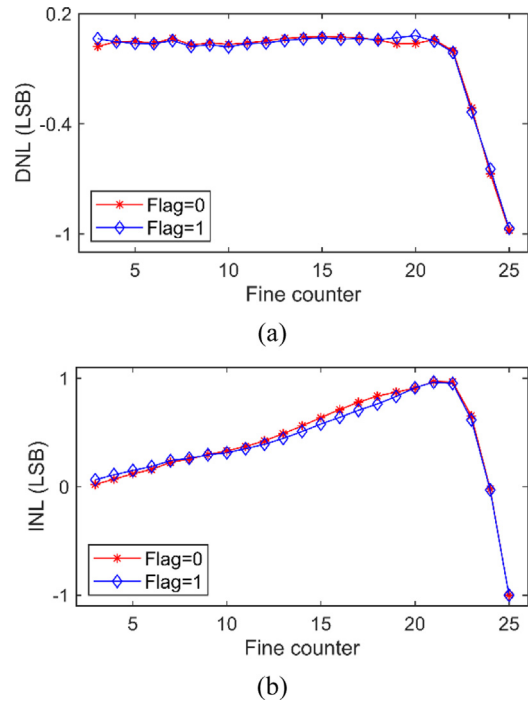

Fig. 5. Measured (a) DNL and (b) INL for the time-marker.

The asymmetric DNL results from the asymmetric probability at the two ends of a Flag field. A hit signal is firstly judged into one of the two fields, either Flag =0 or Flag =1 (i.e., in the first part of the clock cycle or the second part of the clock cycle), and then, its position is determined by using the ring-oscillation to catch up with the previous clock transition edge. Since the ring-oscillation has a jitter larger than the clock signal, the hit position determination has different uncertainties for hit signals in different locations in the clock field. For hits signals located at the back part of the clock field, the position determination has a greater uncertainty because more cycles of the ring-oscillation are needed to catch up with the clock transition edge (i.e., with larger jitter accumulation). This greater uncertainty causes the hit signals detected in one TDC bin may come from several nearby TDC bins. Averagely, the widths of TDC bins are still equal. However, the widths of the last few TDC bins become smaller because the contribution from the nearby TDC bins becomes smaller. The key to this asymmetry is that once a hit signal is judged into a Flag field, it is definitely determined in the field no matter how great the uncertainty of position determination is.

To investigate the influence of temperature on the resolution of the time-marker, the FPGA chip was heated with a hair dryer and the temperature values were read out by the embedded thermometer in FPGA. The resolution changes from 43 ps to 20 ps when the temperature increases from 35 °C to 75 °C, as shown in Fig. 6. A higher temperature makes a longer delay time in the ring-oscillator, which slightly slows down the oscillation frequency [20]. Consequently, a better resolution is obtained when the temperature increases.

The frequency variation of the ring-oscillator can be observed by implementing the time-marker in 16 representative locations of the FPGA and repeating the above test. Taking advantage of programmable frequency control in our design, we can always choose the most suitable frequency to approach the system clock rate. The test results show that the time-marking resolutions among these different locations are in the range from 43 ps to 71 ps.

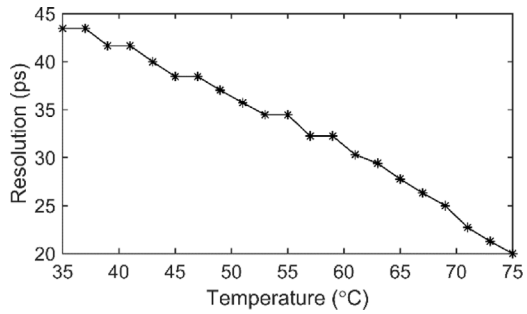

Fig. 6. Measured resolutions varying with the temperature of the time-marker.

3. TDC design

3.1. Time-marker based TDC

Taking the system clock as the reference, the time-marker directly generates a timestamp within a clock cycle for the hit signal. In principle, a TDC with a large dynamic range can be realized by simply adding a coarse counter. The coarse counter gives out a coarse timestamp with a resolution of the system clock period, meanwhile the fine counter in the time-marker generates the fine timestamp in units of the time-marking resolution. The combination of the two timestamps is the measurement result.

Due to the asynchronous characteristic between the hit and system clock signals, the idea of using registers to store the coarse counter value at the hit signal arrival time has a potential metastable problem, which leads to a wrong coarse timestamp. In our design, we postpone the retrieval of the coarse counter until the Eoc signal is validated as shown in Fig. 7. Because the Eoc is validated by the system clock, it is the secure time to retrieve the coarse counter without any risk of metastability. Since the time distance measured by the time-marker is shorter than the system clock period, the value of the coarse counter at the time when the hit signal arrives can be derived from the values of the coarse counter and fine counter at the end of conversion. For the calculation of the fine timestamp, since the bin widths are not equal as shown in Fig. 4, the bin-by-bin calibration [6] is conducted off-line to improve the TDC measurement precision. Using the code density test results, the nth bin width W_n can be calculated as $C_n T_s / C$, where C is the total number of hit signals and C_n is the number of detected signals in the nth bin. With the precise bin widths, the timestamp for the hit signal can be calculated as:

$$t = (m - n) T_s + \left(\sum_{k=1}^{n-1} W_k + \frac{W_n}{2} \right) + F T_{sp} \tag{1}$$

where m, n, and F respectively represent the values of the coarse counter, fine counter, and Flag signal at the end of conversion.

3.2. Multi-mode TDC implementation

The biggest advantage of the time-marker is its low resource consumption. The TDC constructed with only one coarse counter and one time-marker only has a medium performance, i.e., medium resolution and measurement dead time. However, multiple time-makers can be arranged inside TDC to provide enhanced performance in different aspects. To illustrate how to make full use of these time-markers for performance enhancements in different aspects, a multi-mode TDC using eight time-markers is implemented on the FPGA.

The multi-mode TDC consists of eight identical building blocks (Block0~Block7) with each containing a time-marker, a coarse counter, and some auxiliary logics connected as shown in Fig. 8. Through a 2-bit control word over the Mode lines, the TDC can be configured as multi-channel mode, high-precision mode, and high-throughput mode

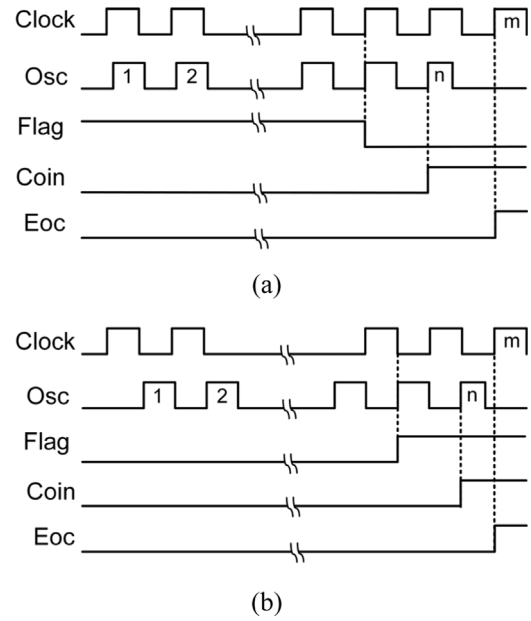

Fig. 7. Timing diagram of the time-marker based TDC for (a) Flag=0 and (b) Flag=1.

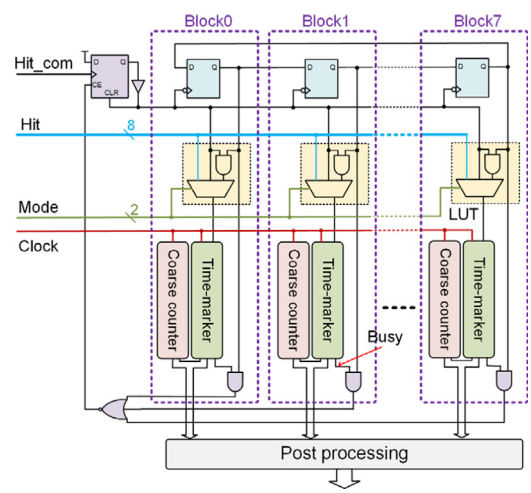

Fig. 8. Composition of multi-mode TDC.

respectively. Correspondingly, the input hit signals for the TDC in different modes are automatically selected. The mode configuration and hit signal selection are realized by the logic circuit with the DFF and LUT in each building block. The DFFs in the building blocks are connected as a circular shift register, whose output indicates the accessibilities of the blocks. Besides, the hit signals that arrive when the multi-mode TDC is busy are filtered out to avoid the disordered output sequences.

In the multi-channel mode, the TDC becomes eight independent TDC channels, each of them only responding to one of the eight Hit input lines. The eight TDC channels can measure eight hit inputs simultaneously.

In the high-precision mode, the TDC becomes one TDC channel. The circular shift register outputs 11111111B, so the eight building blocks simultaneously respond to the hit signal on the Hit_com line. Eight building blocks measure the hit signal in parallel, and the measurement result is the average value of eight outputs. Theoretically, the measurement precision can be improved by $\sqrt{8}$. In such an average manner, an inter-block calibration is needed to cancel the input delay differences among the eight building blocks. In our design, we take

Table 1
RMS precisions of eight blocks.

Building block	Block0	Block1	Block2	Block3	Block4	Block5	Block6	Block7	Average
RMS precision (ps)	36	33	35	34	35	33	34	30	34

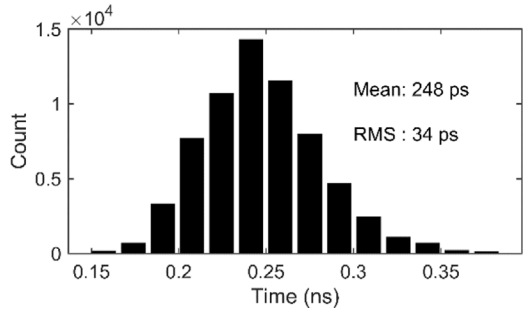

Fig. 9. Histogram of a measured time interval.

the output of Block0 as the reference. The relative delays of other building blocks with respect to Block0 are calculated by subtracting the reference from the outputs of other building blocks. In the post processing stage, these relative delays are removed from the outputs of the blocks before the average value is calculated. Since the input delay is sensitive to operation temperature, these relative delays need to be recalculated when operation temperature changes.

In the high-throughput mode, the TDC is also one TDC channel. The initial value of the circular shift register is a one-hot code 10000000B, where the logic 1 (token) indicates the corresponding block is chosen to receive the next hit. The eight building blocks are activated sequentially by the hit signal on the Hit_com line. When one building block is measuring, the next one is waiting for the arrival of the next signal until the eight building blocks are all occupied. Therefore, the average measurement throughput can be increased by a factor of 8. If the selected block is busy, its Busy line helps to reject the incoming hit signal and the position of the token stays until the block finishes the measurement. Since each block has the same input routing path in the high-precision mode and high-throughput mode, the relative input delays calculated from the high-precision mode can be used for the inter-block calibration in the high-throughput mode as well.

4. Performance evaluation

4.1. Time interval RMS precision

The TDC measurement precision can be evaluated by using two identical TDC channels to measure the time interval, one channel measuring the start signal and the other measuring the stop signal. The difference between the two measured timestamps is the measured time interval. From the measurement histogram for a given time interval, the TDC time interval RMS precision can be obtained. By changing the time interval and repeating the measurement, we can further obtain the RMS precision varying with time intervals.

In our test, the start and stop signals were generated by the two signal generation channels of the arbitrary waveform generator, and the time interval between them was adjusted by adjusting the phase difference between the two generation channels. Fig. 9 shows a typical histogram for a fixed time interval measured by two TDC channels in multi-channel mode, where the mean value of the measured time interval is 248 ps, and the RMS precision is 34 ps.

To observe the RMS precision varying with the time intervals, we changed the time interval at the step of 1.375 ns and measured the RMS precisions for time intervals in the range from 0 ns to 45 ns. The test results in the three operation modes are shown in Fig. 10. The RMS precisions of eight blocks in the multi-channel mode are listed in Table 1, and the average RMS precisions and other relative performance for the multi-mode TDC in the three operation modes are summarized in Table 2. Comparing the average RMS precision in the high-precision mode to that in the multi-channel mode, it is improved by 2.4 times, which is close to the theoretical value of $\sqrt{8}$.

Table 2
Summarized performance for the multi-mode TDC in three modes.

Mode	Multi-channel	High-precision	High-throughput
RMS precision (ps)	34	14	33
Dead time (ns)	50	50	6.25
RMS variation over temperature	31%	16%	29%

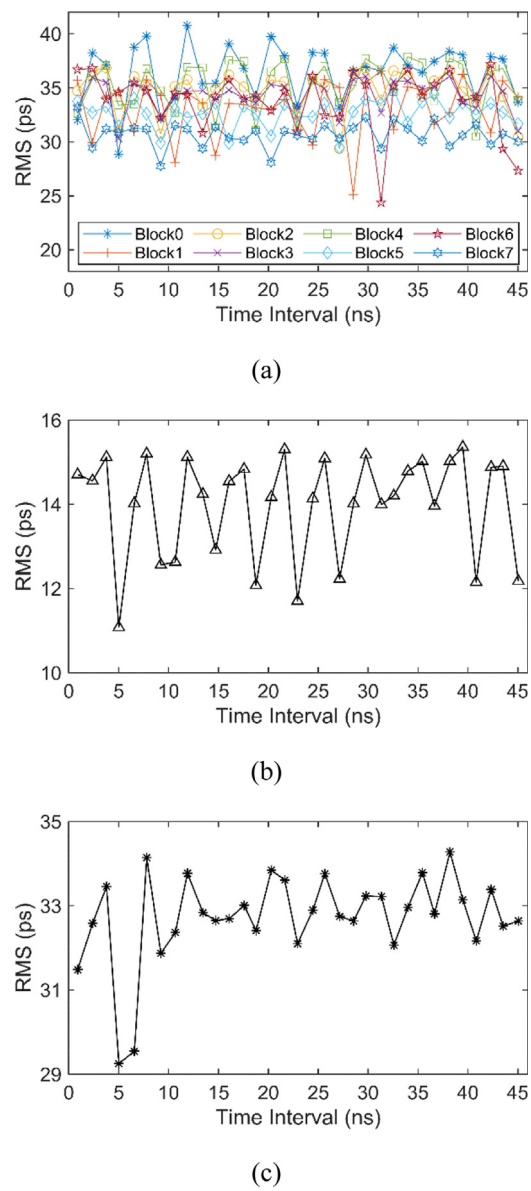

Fig. 10. Measured time interval RMS precisions in (a) multi-channel mode (b) high-precision mode and (c) high-throughput mode.

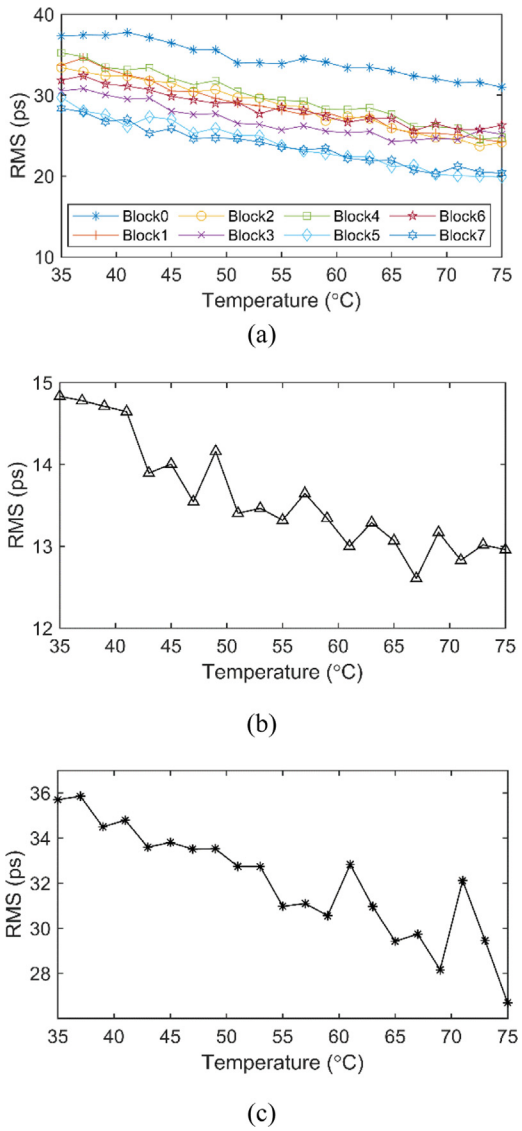

Fig. 11. Measured RMS precisions varying with temperature in (a) multi-channel mode (b) high-precision mode and (c) high-throughput mode.

4.2. Temperature dependence

By repeating the time interval measurement against the operation temperature, we can observe the temperature dependence of the multi-mode TDC performance. For a fixed time interval of 33.052 ns, the RMS precisions varying with temperature in three modes are measured as shown in Fig. 11. The variations of the RMS precision over the temperature range, i.e., from 35 °C to 75 °C, are 31%, 16%, and 29% of the average precisions in the three operation modes respectively (see the summarized temperature dependence performance in Table 2). We observed that the measured RMS precision improves with temperature in three modes. The improvement can be explained as follows. As shown in Fig. 6, a higher temperature generates a better TDC resolution, therefore, the quantization error is reduced and the RMS precision is improved.

5. Conclusion

Differently from the traditional Vernier TDC using two oscillators, the time-marker uses one oscillation to catch up with the system clock by aligning with either the clock rising edge or the clock falling edge. So the metastable problem between the hit signal and system clock can be elegantly avoided and the measurement dead time can be effectively reduced. The proposed ring-oscillator with programmable frequency makes the TDC design easier and TDC performance less position-dependent. Because the time-marker is very resource-saving, it is suitable to combine multiple time-markers to construct a TDC with performance enhancement. In the demo design of the multi-mode TDC using eight time-markers, the TDC can be either eight independent TDC channels, each with 34 ps time interval RMS precision and 50 ns dead time, or one TDC channel with 14 ps RMS precision and 50 ns dead time, or one TDC channel with 33 ps RMS precision and 6.25 ns dead time. The RMS precisions in three operation modes are also evaluated with 31%, 16%, and 29% variation respectively within a temperature range of 40 °C.

CRediT authorship contribution statement

Jianfeng Zhang: Methodology, Investigation, Data curation, Writing. **Yonggang Wang:** Conceptualization, Validation, Supervision, Writing - review & editing. **Zhengqi Song:** Project administration.

Declaration of competing interest

The authors declare that they have no known competing financial interests or personal relationships that could have appeared to influence the work reported in this paper.

Acknowledgment

This work was supported by the National Natural Science Foundation of China (NSFC) under Grants 11735013.

References

[1] R. Machado, J. Cabral, F.S. Alves, Recent developments and challenges in FPGA-based time-to-digital converters, IEEE Trans. Instrum. Meas. 68 (2019) 4205–4221.
[2] Z. Cheng, X. Zheng, M.J. Deen, H. Peng, Recent developments and design challenges of high-performance ring oscillator CMOS time-to-digital converters, IEEE Trans. Electron Devices 63 (2016) 235–251.
[3] J. Kalisz, Review of methods for time interval measurements with picosecond resolution, Metrologia 41 (2004) 17–32.
[4] Y. Wang, X. Zhou, Z. Song, J. Kuang, Q. Cao, A 3.0-ps rms precision 277-MSamples/s throughput time-to-digital converter using multi-edge encoding scheme in a Kintex-7 FPGA, IEEE Trans. Nucl. Sci. 66 (2019) 2275–2281.
[5] Y. Wang, J. Kuang, C. Liu, Q. Cao, A 3.9-ps RMS precision time-to-digital converter using ones-counter encoding scheme in a Kintex-7 FPGA, IEEE Trans. Nucl. Sci. 64 (2017) 2713–2718.
[6] C. Liu, Y. Wang, A 128-channel, 710 M samples/second, and less than 10 ps RMS resolution time-to-digital converter implemented in a Kintex-7 FPGA, IEEE Trans. Nucl. Sci. 62 (2015) 773–783.
[7] J. Yu, F.F. Dai, R.C. Jaeger, A 12-bit vernier ring time-to-digital converter in 0.13 μ CMOS technology, IEEE J. Solid-State Circuits 45 (2010) 830–842.
[8] H. Wang, F.F. Dai, H. Wang, A reconfigurable vernier time-to-digital converter with 2-D spiral comparator array and second-order $\Delta\ \Sigma$ linearization, IEEE J. Solid-State Circuits 53 (2018) 738–749.
[9] L. Vercesi, A. Liscidini, R. Castello, Two-dimensions vernier time-to-digital converter, IEEE J. Solid-State Circuits 45 (2010) 1504–1512.
[10] P. Lu, A. Liscidini, P. Andreani, A 3.6 mW, 90 nm CMOS gated-vernier time-to-digital converter with an equivalent resolution of 3.2 ps, IEEE J. Solid-State Circuits 47 (2012) 1626–1635.
[11] P. Lu, Y. Wu, P. Andreani, A 2.2-ps two-dimensional gated-vernier time-to-digital converter with digital calibration, IEEE Trans. Circuits Syst. II Express Briefs 63 (2016) 1019–1023.
[12] P. Lu, P. Andreani, A. Liscidini, A 2-D GRO vernier time-to-digital converter with large input range and small latency, in: Dig. Pap. - IEEE Radio Freq. Integr. Circuits Symp., 2013, pp. 151–154.
[13] Z. Cheng, M.J. Deen, H. Peng, A low-power gateable vernier ring oscillator time-to-digital converter for biomedical imaging applications, IEEE Trans. Biomed. Circuits Syst. 10 (2016) 445–454.
[14] B. Markovic, S. Tisa, F.A. Villa, A. Tosi, F. Zappa, A high-linearity, 17 ps precision time-to-digital converter based on a single-stage vernier delay loop fine interpolation, IEEE Trans. Circuits Syst. I. Regul. Pap. 60 (2013) 557–569.

[15] P. Dudek, S. Szczepański, J.V. Hatfield, A high-resolution CMOS time-to-digital converter utilizing a vernier delay line, IEEE J. Solid-State Circuits 35 (2000) 240–247.

[16] R.B. Staszewski, S. Vemulapalli, P. Vallur, J. Wallberg, P.T. Balsara, 1.3 V 20 ps time-to-digital converter for frequency synthesis in 90-nm CMOS, IEEE Trans. Circuits Syst. II Express Briefs 53 (2006) 220–224.

[17] K. Cui, Z. Ren, X. Li, Z. Liu, R. Zhu, A high-linearity, ring-oscillator-based, vernier time-to-digital converter utilizing carry chains in FPGAs, IEEE Trans. Nucl. Sci. 64 (2017) 697–704.

[18] J. Zhang, D. Zhou, An 8.5-ps two-stage vernier delay-line loop shrinking time-to-digital converter in 130-nm flash FPGA, IEEE Trans. Instrum. Meas. 67 (2018) 406–414.

[19] J. Zhang, D. Zhou, A new delay line loops shrinking time-to-digital converter in low-cost FPGA, Nucl. Instrum. Methods Phys. Res. A 771 (2015) 10–16.

[20] C.C. Chen, C.L. Chen, W. Fang, Y.C. Chu, All-digital CMOS time-to-digital converter with temperature-measuring capability, IEEE Trans. Very Large Scale Integr. (VLSI) Syst. 28 (2020) 2079–2083.