This article has been accepted for inclusion in a future issue of this journal. Content is final as presented, with the exception of pagination.

High-Throughput/Low-Energy MTJ-Based True Random Number Generator Using a Multi-Voltage/Current Converter

Naoya Onizawa, *Member, IEEE*, Shogo Mukaida, Akira Tamakoshi, Hitoshi Yamagata, Hiroyuki Fujita, and Takahiro Hanyu, *Senior Member, IEEE*

***Abstract*— This article introduces high-throughput/low-energy true random number generators (TRNGs) based on CMOS and three-terminal magnetic tunnel junction (MTJ) devices. MTJs are fast and probabilistic switching devices, which can be used as random number sources for TRNGs. However, as the switching probability is quite sensitive to the write current given to MTJs, precise closed-loop control is necessary. Thus, a high-complexity current control circuit is required, such as high precision digital-to-analog converters (DACs), occupying large area and causing large energy dissipation. In order to address the issue, we propose a multi-voltage/current (V/I) converter capable of multilevel coarse current switching and fine adjusting within each level. The fine adjusting can be done by DACs with fewer bits, resulting in much smaller size and energy dissipation than a conventional single-V/I converter. In addition, a multiple-writing scheme for three-terminal MTJs is proposed for increasing the throughput while maintaining the write power. The proposed TRNGs are designed using TSMC 65-nm CMOS and a three-terminal MTJ model that achieves a throughput of 333 Mb/s, an energy dissipation of 0.66 pJ/bit and an area of 2040 μm^2. This result exhibits a 5× throughput, a 93% energy reduction and an 86% area reduction in comparison with a conventional CMOS/MTJ-based TRNG.**

***Index Terms*— Internet of Things (IoT) device, magnetic tunnel junction (MTJ), true random number generator (TRNG).**

I. Introduction

IN RECENT years, the number of Internet of Things (IoT) devices has increased, and it is estimated that it will be about 30 billion [1]. IoT devices need to manage advanced personal information, such as health care and social services, through the Internet environment [2]. A random number is exploited for security management of the IoT device [3]. Random numbers are categorized into pseudorandom numbers and true random numbers. Pseudorandom numbers are generated by calculation based on algorithms and have periodicity. All bits can be reproduced if the initial value and algorithm are known, and therefore it is inappropriate as a random number used for encryption [4]. In contrast, as true random numbers are generated from a physical random factor, each bit is independent of each other, and the occurrence probabilities of 1/0 are equal. Therefore, it is useful for encryption system of security management of IoT devices handling advanced information.

True random number generators (TRNGs) can be designed using existing CMOS devices and/or emerging devices. In the CMOS-based TRNGs [5]–[10], as CMOS transistors are not probabilistic switching devices, randomness are artificially created using noise signals, such as thermal noises. In contrast, emerging-device based TRNGs exploit probabilistic switching behaviors naturally derived from devices [11]–[14]. In the case of a laser chaotic device using light, random numbers can be generated at high speed, but the entire circuit is quite large [11]. In the case of a single flux quantum (SFQ) circuit, it can be used only in a low temperature environment [12].

Magnetic tunnel junctions (MTJs) [15] are one of promising devices for the emerging-device based TRNGs [16]–[22] because of high write endurance and high-speed probabilistic switching. In [16], Spin Dice demonstrates the generation of true random numbers while only MTJ devices are tested with an external test board and a measurement system. In the conventional MTJ-based TRNGs, only a core circuit for CMOS/MTJ-based TRNGs has been presented with the National Institute of Standards and Technology (NIST) statistical test (NIST SP 800-22) [23]. However, a whole CMOS/MTJ-based TRNG circuit including a control circuit of MTJ devices has not been presented.

In this article, we introduce high-throughput/low-energy TRNGs based on CMOS/MTJ devices. The MTJs are high-speed probabilistic switching devices; however, the probability is quite sensitive to the write current. To tackle this issue, the whole TRNG circuit is designed based on digitally controlled probability locked loop (DCPLL) [17]. It automatically sets a desired write current to MTJ devices for a 50% switching probability while it requires a large hardware

Manuscript received December 1, 2019; revised March 11, 2020 and May 31, 2020; accepted June 23, 2020. This work was supported in part by Canon Medical Systems Corporation and in part by the VLSI Design and Education Center (VDEC), The University of Tokyo, with the collaboration with Synopsys Corporation. *(Corresponding author: Naoya Onizawa.)*

Naoya Onizawa, Shogo Mukaida, Akira Tamakoshi, and Takahiro Hanyu are with the Research Institute of Electrical Communication, Tohoku University, Sendai 980-8577, Japan (e-mail: naoya.onizawa.a7@tohoku.ac.jp; shogo.mukaida.r4@dc.tohoku.ac.jp; akira.tamakoshi.e7@tohoku.ac.jp; takahiro.hanyu.c4@tohoku.ac.jp).

Hitoshi Yamagata and Hiroyuki Fujita are with the Advanced Research Laboratory, CANON Medical Systems Corporation, Otawara 324-8550, Japan (e-mail: hitoshi.yamagata@medical.canon; hiroyuki12.fujita@medical.canon).

Color versions of one or more of the figures in this article are available online at http://ieeexplore.ieee.org.

Digital Object Identifier 10.1109/TVLSI.2020.3005413

1063-8210 © 2020 IEEE. Personal use is permitted, but republication/redistribution requires IEEE permission.
See https://www.ieee.org/publications/rights/index.html for more information.

Authorized licensed use limited to: UNIVERSITY OF WESTERN ONTARIO. Downloaded on July 25,2020 at 21:33:20 UTC from IEEE Xplore. Restrictions apply.

This article has been accepted for inclusion in a future issue of this journal. Content is final as presented, with the exception of pagination.

due to a high-precision digital-to-analog converter (DAC) [24]–[29]. The hardware overhead can be mitigated using the proposed multi-voltage/current (V/I) converter. The multi-V/I converter performs both the coarse control by selecting a current range and the fine control within the range to achieve the 50% switching probability. It can lower the sensitivity with a negligible area overhead, leading to the reduction of the bit precision required for the DAC. In addition, a multiple-writing scheme for three-terminal MTJs is proposed for increasing the throughput while maintaining the write power. The proposed TRNGs are designed using TSMC 65-nm CMOS and a three-terminal MTJ model that achieves a throughput of 333 Mb/s, an energy dissipation of 0.66 pJ/bit and an area of 2040 μm^2. This result exhibits a 5× throughput, a 93% energy reduction and an 86% area reduction in comparison with a conventional CMOS/MTJ-based TRNG.

The previous work was presented in [30] that showed only the multi-V/I converter. The extended work presented in this article includes: 1) the whole CMOS/MTJ-based TRNG circuit design under process/voltage/temperature (PVT) corners; 2) improved DCPLL for generating higher quality of random numbers than that of the previous work; 3) multiple-writing scheme for high-throughput random number generation; 4) randomness check of generated random numbers using NIST; and 5) performance comparisons with emerging-device based TRNGs and CMOS-based TRNGs.

The rest of this article is organized as follows. Section II reviews the MTJ devices with the probabilistic switching behaviors. Section III describes a CMOS/MTJ-based TRNG using a single-V/I converter. Section IV proposes a reduced-complexity CMOS/MTJ-based TRNG using a multi-V/I converter. Section V introduces a multiple-writing scheme of MTJ devices for high-speed random number generation. Section VI evaluates the randomness of random numbers generated using the proposed TRNGs and compares the performance with conventional CMOS/MTJ-based TRNGs and CMOS-based TRNGs. Section VII concludes this article.

II. Three-Terminal MTJ Devices

A three-terminal MTJ is a device that utilizes tunnel magneto resistance effect. Fig. 1(a) shows a three-terminal MTJ which can be mainly realized on the basis of a domain wall motion (DWM) device [31]. The three-terminal device is modeled based on [32] and is used in this article, where the model was created using C-language or Verilog-A [33]. In the three-terminal MTJ device, as shown in Fig. 1(a), since the read/write path is separated, unlike the two-terminal MTJ [15], it does not cause read disturb. The read resistance of MTJ device, R_{MTJ}, takes one of two states, R_L and R_H. The symbol is shown in Fig. 1(b), and the resistance values of R_L and R_H are 17.5 and 24 kΩ, respectively. R_{MTJ} is switched between R_L and R_H by a write current, I_{sw}, through the write path (T2-T3) shown in Fig. 1(c). The relationship between switching probability and switching current is shown in Fig. 1(d). As shown in Fig. 1(d), the switching current range within which the switching probability changes from 20% to 80% is very limited to several microamperes. Since the MTJ element

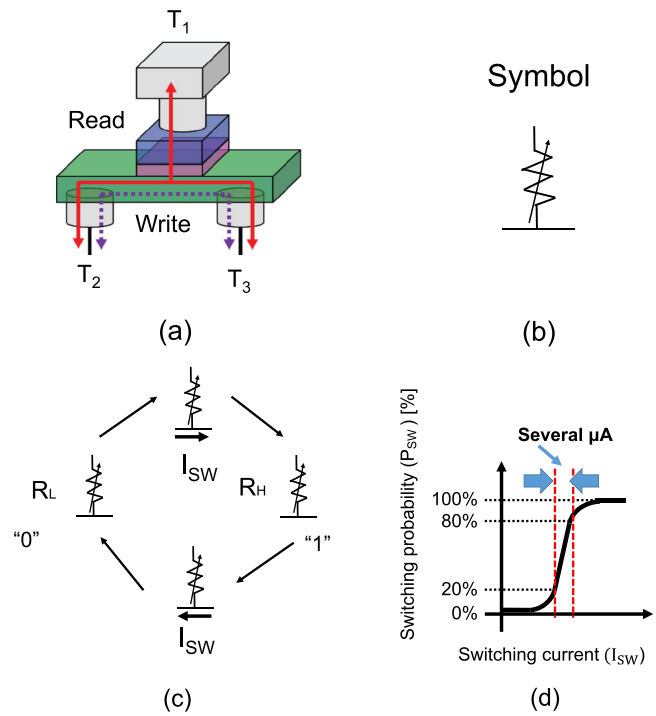

Fig. 1. DWM-based three-terminal MTJ model. (a) Diagram of three-terminal MTJ device. (b) Symbol of three-terminal MTJ device. (c) Write operation. (d) Relation between switching current and switching probability.

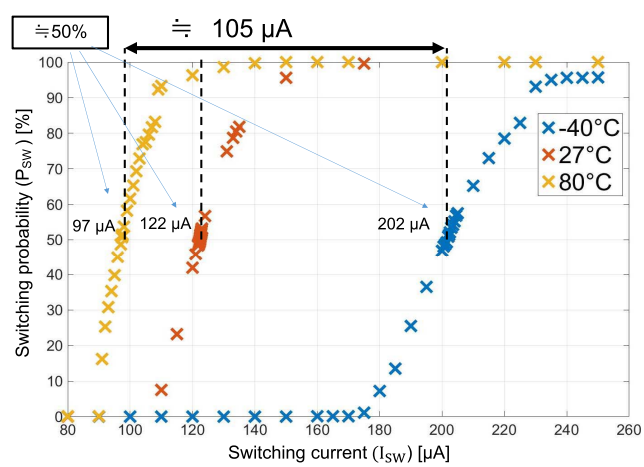

Fig. 2. Switching probability versus switching current under different temperatures in the three-terminal MTJ device with a current pulse signal of 5 ns. A different switching current needs to be precisely determined for the 50% switching probability.

is used as the probabilistic elements of TRNGs [34]–[38], it is necessary to set the probability variation within a range of 48.625%–51.375% [12]. The switching current for the 48.625% probability is defined as I_{swL} and that for the 51.375% probability is defined as I_{swH}, where ΔI_{sw} is $(I_{\mathrm{swH}} - I_{\mathrm{swL}})$.

Fig. 2 shows the switching probability versus the switching current under different temperatures in the three-terminal MTJ device with a current pulse signal of 5 ns. As the temperature is increased, the switching current required for a 50% switching probability is decreased. In addition, as the slopes of the probabilities are different at different temperatures, ΔI_{sw} is

Authorized licensed use limited to: UNIVERSITY OF WESTERN ONTARIO. Downloaded on July 25,2020 at 21:33:20 UTC from IEEE Xplore. Restrictions apply.

This article has been accepted for inclusion in a future issue of this journal. Content is final as presented, with the exception of pagination.

TABLE I
WRITE CURRENTS FOR SWITCHING PROBABILITY OF 50% CORRESPONDING TO FIG. 2

	$-40°$C	27°C	80°C
I_{swL}	201.00	121.88	97.00
I_{swH}	202.25	122.58	97.48
$\Delta I_{sw}[\mu A]$	1.25	0.70	0.48

also different as summarized in Table I. It can be seen that the usable range of the switching current ($\Delta I_{\rm sw}$) is very narrow and varies depending on temperature. In order to design the MTJ-based TRNG, the switching current needs to be precisely adjusted to compensate the temperature change.

III. MTJ-BASED TRNG USING SINGLE-V/I CONVERTER

A. Overall Structure

Fig. 3(a) shows the overall structure of the conventional MTJ-based TRNG using a single-V/I converter [17]. It consists of a random bit generator (RBG), a binary counter, a digital comparator, a 10-bit updown counter, and a 10-bit DAC. The RBG circuit is composed of a single-V/I converter, an MTJ device model, and a sense amplifier described in Fig. 3(b).

Let us explain an operation of the RBG circuit. The RBG circuit operates at one of three phases: write, read, and erase. In the write phase, $V_{\rm write}$ is high and $V_{\rm read}$ and $V_{\rm erase}$ are low.

1) First, an analog voltage, $V_{\rm IN}$, is applied from the DAC to the RBG.
2) Second, $V_{\rm IN}$ is converted to an analog switching current, $I_{\rm sw}$, for the MTJ writing using the single-V/I converter.
3) Third, the resistance of the MTJ probabilistically switches from R_L to R_H.

Fig. 3(c) shows the characteristic of the single-V/I converter using TSMC 65-nm CMOS technology at 27 °C and $V_{\rm DD} = 1.0$ V. The usable range of the switching current is $\Delta I_{\rm sw}$ of 0.70 μA, which corresponds to the range of the input voltage, $\Delta V_{\rm IN}$, of 3.29 mV. As the DAC needs to control the small voltage of $\Delta V_{\rm IN}$, $\Delta V_{\rm IN}$ determines the bit precision of the DAC. The bit precision required for the DAC, x, is determined as follows:

$$V_{\rm DD} \cdot 2^{-x} \leq \Delta V_{\rm IN} < V_{\rm DD} \cdot 2^{-x+1}. \quad (1)$$

In the read phase, $V_{\rm read}$ is high and $V_{\rm write}$ and $V_{\rm erase}$ are low. The resistance of the MTJ, $R_{\rm MTJ}$, is read through a differential-pair circuit. The output voltage, $V_{\rm OUT}$, is high when $R_{\rm MTJ}$ is R_H and is low when R_L. In the erase phase, $V_{\rm erase}$ is high and $V_{\rm write}$ and $V_{\rm read}$ are low. The erase current is generated to change $R_{\rm MTJ}$ to R_L, where the direction of the erase current is opposite to that of $I_{\rm sw}$. These three phases are a cycle of the RBG circuit that generates a random bit.

B. Digitally Controlled Probability Locked Loop

The MTJ-based TRNG is controlled based on DCPLL. The algorithm of DCPLL is illustrated in Fig. 4 that the switching probability of 50% is automatically locked as calibration. Let us explain the calibration of the TRNG in the following.

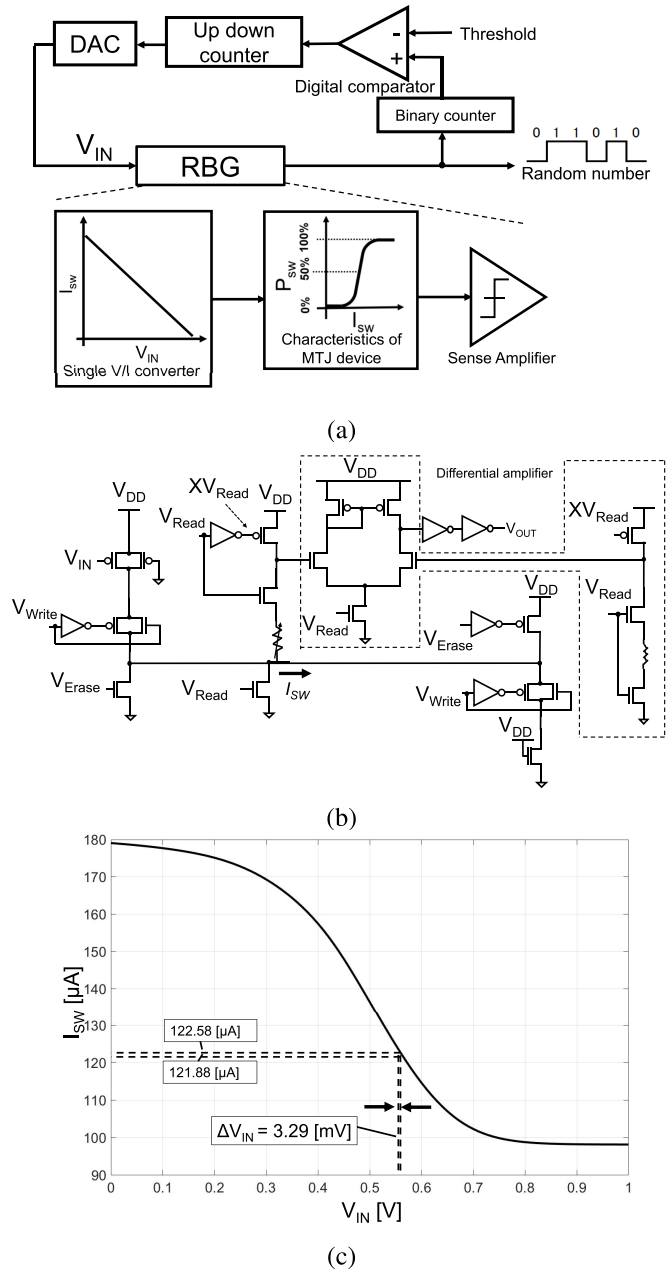

Fig. 3. Conventional MTJ-based TRNG using a single-V/I converter. (a) Overall structure. (b) RBG circuit. (c) $I_{\rm sw}$ versus $V_{\rm in}$ at 27 °C and $V_{\rm DD} = 1.0$ V. As a precise voltage control of $\Delta V_{\rm IN}$ is required, a high-precision DAC is required.

1) The RBG circuit operates N times to generate N random bits, which are stored in the binary counter.
2) The value counted is compared with the threshold of $N/2$ in the digital comparator.
3) The output of the digital comparator is "1," if the counter value is higher or is equal to the threshold, and is "0," otherwise.
4) The value of the 10-bit updown counter changes by $+1$ or -1 depending on the output of the digital comparator.
5) $V_{\rm IN}$ changes using the 10-bit DAC and then $I_{\rm sw}$ changes to control the switching probability of the MTJ.

Authorized licensed use limited to: UNIVERSITY OF WESTERN ONTARIO. Downloaded on July 25,2020 at 21:33:20 UTC from IEEE Xplore. Restrictions apply.

This article has been accepted for inclusion in a future issue of this journal. Content is final as presented, with the exception of pagination.

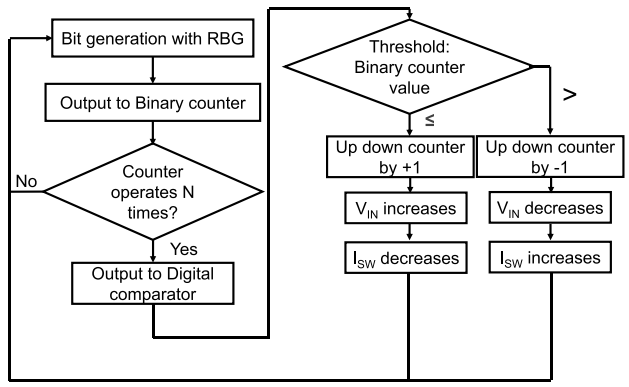

Fig. 4. Algorithm of DCPLL in the conventional MTJ-based TRNG. A desired I_{sw} for the switching probability of 50% is automatically locked.

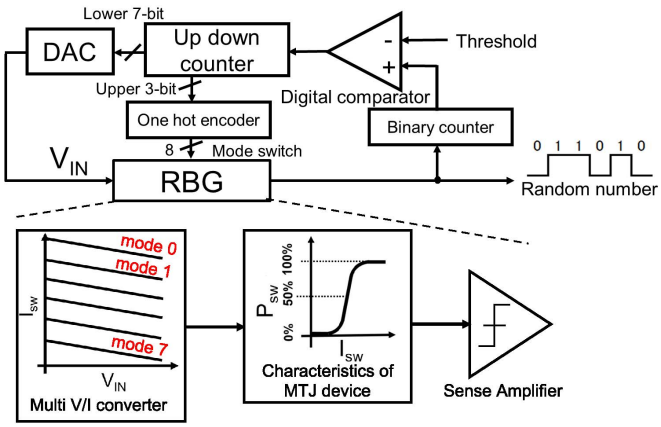

Fig. 5. Proposed reduced-complexity MTJ-based TRNG using the multi-V/I converter.

These five procedures repeatedly perform to automatically determine V_{IN} for the switching probability of 50%.

The DCPLL-based TRNG can properly operate under different environments as desired V_{IN} is automatically locked. However, the bit precision required for the DAC is high (e.g., 10 bits in [17]). Hence, the control circuit for the MTJ writing is complicated, causing large area and large power dissipation.

IV. Reduced-Complexity TRNG Using Multi-V/I Converter

A. RBG Circuit Using Multi-V/I Converter

In order to reduce the complexity of the control circuit due to the high-precision DAC, the TRNG using the multi-V/I converter is presented, as shown in Fig. 5. The overall structure is designed based on Fig. 3(a), where the single-V/I converter is replaced by the multi-V/I converter with the one hot encoder. Fig. 6(a) illustrates the RBG circuit using the multi-V/I converter. The RBG circuit operates at one of three phases as well as the conventional one shown in Fig. 6(b).

As opposed to the conventional RBG circuit, the proposed RBG circuit selects one of eight V/I characteristics (modes). There are eight PMOS/NMOS pairs, where each transistor is designed with a different width and a fixed length. Table II summarizes the widths of the PMOS/NMOS pairs,

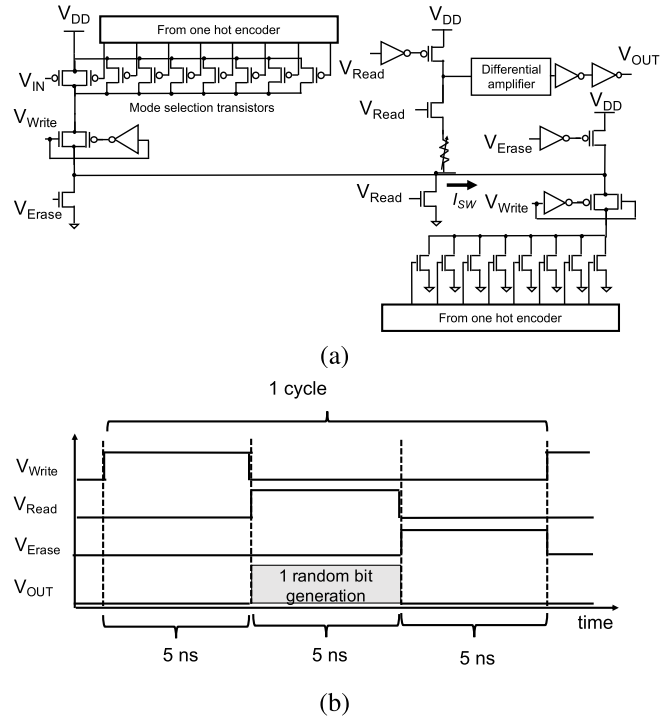

Fig. 6. Proposed RBG circuit using the multi-V/I converter. (a) Circuit diagram and (b) timing diagram, where one random bit is generated for 15 ns.

TABLE II
Widths of Transistors Selected by the One-Hot Encoder of the RBG Circuit

Mode	PMOS width	NMOS width
0	2.16 μm	9.96 μm
1	1.92 μm	4.86 μm
2	1.74 μm	2.76 μm
3	1.62 μm	1.62 μm
4	1.44 μm	1.20 μm
5	1.32 μm	0.84 μm
6	1.20 μm	0.66 μm
7	1.20 μm	0.52 μm

where the fixed lengths of PMOS and NMOS transistors are 0.24 and 0.18 μm, respectively. One of the pairs is selected by the one hot encoder and generates a different current for coarse control, or selection of a mode. Additional fine control is performed by a V_{IN}-controlled PMOS. The size of the V_{IN}-controlled PMOS is a width of 0.12 μm and a length of 0.06 μm.

Fig. 7 shows the V/I characteristics of the RBG circuit at different PVT corners. The slope of each V/I characteristic is gentler than that of the conventional one, as shown in Fig. 3(c). The gentle slope increases ΔV_{IN} and hence reduces the bit precision required for the DAC. The bit precision reduces from 10 to 7 evaluated in detail in Section VI. The number of modes of 8 is selected in this article while it is flexible depending on the desired bit precision of the DAC. In contrast, as each V/I characteristic covers narrower range of I_{sw} than the conventional V/I converter, the eight modes are used to cover the similar range. The range varies depending on temperature as well as the switching current of the MTJ.

Fig. 8 shows simulated waveforms of the proposed RBG circuit using TSMC 65-nm CMOS and the three-terminal MTJ

Authorized licensed use limited to: UNIVERSITY OF WESTERN ONTARIO. Downloaded on July 25,2020 at 21:33:20 UTC from IEEE Xplore. Restrictions apply.

This article has been accepted for inclusion in a future issue of this journal. Content is final as presented, with the exception of pagination.

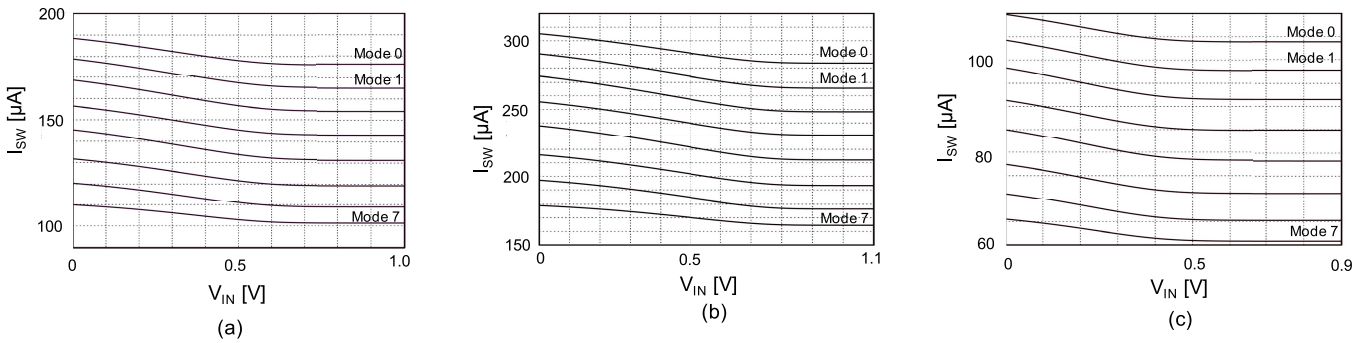

Fig. 7. I_{sw} versus V_{in} in the multi-V/I converter at different PVT corners. (a) TT, normal voltage (1.0 V), 27 °C. (b) FF, high voltage (1.1 V), −40 °C. (c) SS, low voltage (0.9 V), 80 °C. Each slope of the V/I converter is gentler than that of the single-V/I converter, reducing the bit precision of the DAC.

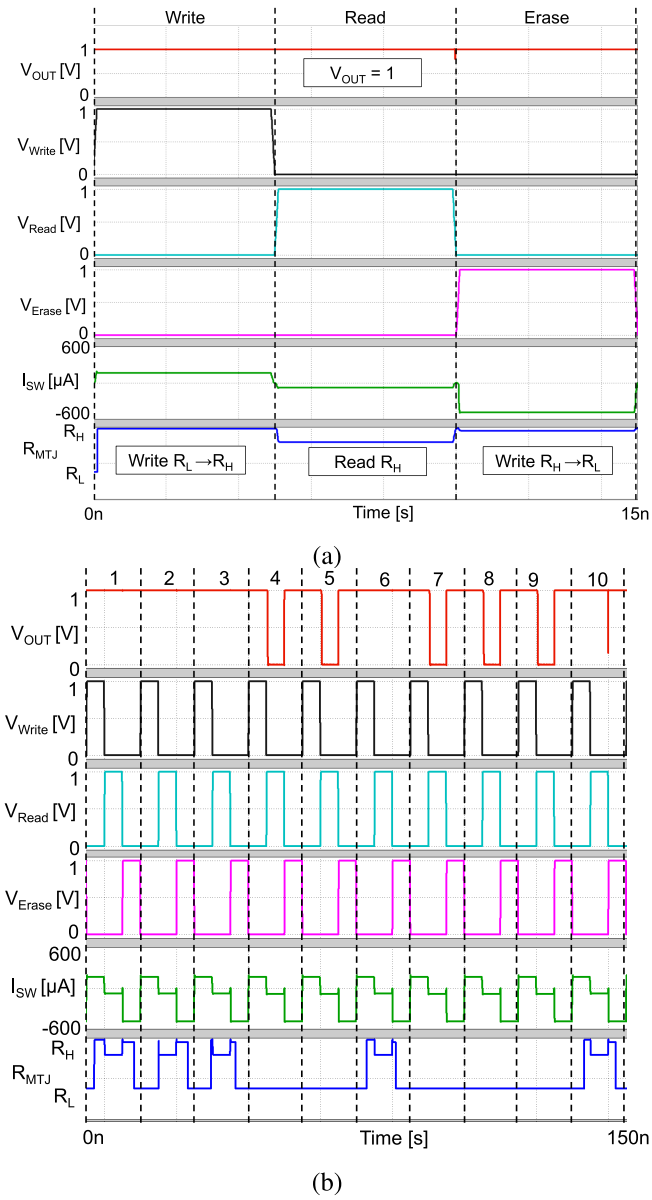

Fig. 8. Simulated waveforms of the RBG circuit using TSMC 65-nm CMOS and the three-terminal MTJ model at TT corner, 27 °C and V_{DD} = 1.0 V. (a) single trial and (b) ten-time trial.

model in [32] and [33]. HSPICE is used for the simulation at TT corner, 27 °C and V_{DD} = 1.0 V. In the single trail, as shown in Fig. 8(a), each phase takes 5 ns for write, read, and erase. In the write phase, R_{MTJ} changes from R_L to R_H by the switching current, I_{sw}. In the read phase, the resistance is read to determine V_{OUT} = 1.0 V. In the erase phase, R_{MTJ} changes back to R_L by the erase current. Hence, each trial for generating a random bit takes 15 ns.

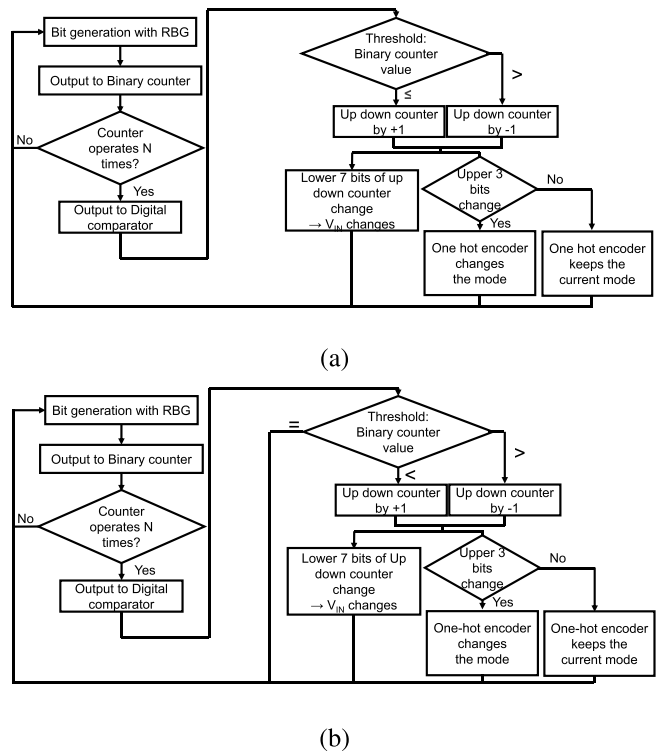

Fig. 9. Improved DCPLL controlling I_{sw} in the proposed TRNG based on the digital comparators. (a) Two states. (b) Three states.

The ten-time trial simulation shown in Fig. 8(b) exhibits the generation of random bits using the same switching current, I_{sw}. In this case, R_{MTJ} switches to R_H for five times and also remains R_L for five times.

B. Improved DCPLL With Three-State Digital Comparator

In the proposed TRNG, the mode of the RBG circuit needs to be controlled. Fig. 9(a) shows the improved DCPLL for the proposed TRNG. The most of the procedures are similar to that of the conventional DCPLL, as shown in Fig. 4. The different procedures are explained as follows. After updating the 10-bit

Authorized licensed use limited to: UNIVERSITY OF WESTERN ONTARIO. Downloaded on July 25,2020 at 21:33:20 UTC from IEEE Xplore. Restrictions apply.

This article has been accepted for inclusion in a future issue of this journal. Content is final as presented, with the exception of pagination.

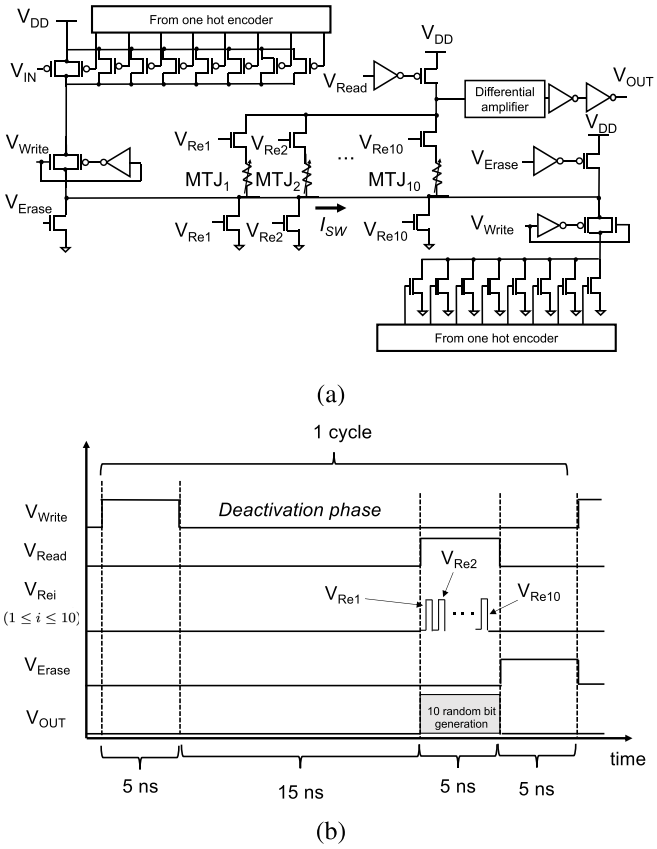

Fig. 10. Proposed multiple-writing RBG circuit. (a) Circuit diagram and (b) timing diagram, where ten random bits are generated for 30 ns.

updown counter, the lower 7-bit value of the updown counter is used as the input to the 7-bit DAC, which controls I_{sw}. Concurrently, the upper 3-bit value is used to change the mode of RBG circuit using the one hot encoder. The 3-bit value of "000" corresponds to mode 0 and that of "111" corresponds to mode 7, where each mode covers a specific range of I_{sw}, as shown in Fig. 7. All lower bits of "1" correspond to the minimum I_{sw} supported by a mode while all lower bits of "0" correspond to the maximum I_{sw} supported by this mode. Hence, when all lower bits are "1" or "0," the mode needs to be changed to support higher or lower I_{sw} in another mode. For example, if the value of the updown counter changes from 0101111111 to 0110000000 by adding +1, the mode changes from modes 2 to 3 and V_{IN} changes from 1.0 to 0 V.

In addition, the improved DCPLL is also designed with the three-state digital comparator, as shown in Fig. 9(b). In the conventional two-state digital comparator, only the comparison function is realized. In the three-state digital comparator, the equal function is added that remains V_{IN} at the same voltage when the value of the binary counter is equal to the threshold. These two DCPLLs are evaluated for NIST statistical test in Section VI.

V. Multiple-Writing RBG Circuit

For designing high-throughput MTJ-based TRNGs, the multiple-writing RBG circuit is introduced. Fig. 10(a) illustrates the multiple-writing RBG circuit, where the differential amplifier is described in Fig. 3(b). In this circuit, ten MTJs are serially connected in order to concurrently write them using a single current, I_{sw}. As the DWM-based three-terminal MTJs exhibit a low writing resistance (e.g., 150 Ω) [31], [32], the multiple writing can be realized for the serially connected MTJs. The number of multiple MTJs of ten is selected in this article while it is flexible. The reason to choose this number is that the delay time of ten-times reading MTJ devices is approximately equal to the write time of the MTJ devices.

Fig. 10(b) shows the timing diagram of the multiple-writing RBG circuit. As opposed to the RBG circuit with the single MTJ shown in Fig. 6, a deactivation phase is added between the write phase and the read phase. It is because MTJ devices remain active for several nanoseconds after stopping write currents [39]. During this period, a read current of an MTJ device could disturb the states of the other nine MTJ devices in the multiple-writing RBG circuit. This read-disturb incurs a bias of generated random bits, which could not be passed by the NIST statistical test. In order to maintain a high quality of generated random bits, a 15-ns interval is set at the deactivation phase

Let us briefly explain the behavior of the multiple-writing RBG circuit. First, the writing current is applied for the ten MTJ devices at the write phase. Second, there is the deactivation phase for 15 ns. Third, ten random bits are serially read using one of V_{Rei} $(1 \leq i \leq 10)$ for 5 ns at the read phase. Fourth, all the ten MTJ devices are erased for 5 ns at the erase phase. In total, ten random bits are generated for 30 ns, which increases the throughput by five times in comparison with the RBG circuit shown in Fig. 6.

VI. Evaluation

The MTJ-based TRNGs are designed using TSMC 65-nm CMOS and the three-terminal DWM-MTJ model [32], [33]. The DWM device model was developed based on fabricated DWM devices with CMOS [32], where a part of this model was described in [33]. There are three TRNGs: conventional, proposed single, and proposed multiple. The conventional TRNG is designed using the single-V/I converter and the conventional DCPLL described in Section III and the proposed single TRNG is designed using the multi-V/I converter and the improved DCPLL described in Section IV. The proposed multiple TRNG is designed based on the proposed single TRNG by replacing the RBG circuit to the multiple-writing RBG circuit described in Section V.

The DACs are designed using a resistor ladder structure with a current of 100 μA. For the 10-bit DAC used in the conventional TRNG, 1024 resistors of 9.77 Ω are serially connected, where each resistor size is a length of 0.16 μm by a width of 2.0 μm. For the 7-bit DAC used in the proposed single and multiple TRNGs, 128 resistors of 78.125 Ω are serially connected, where each resistor size is a length of 1.27 μm by a width of 2.0 μm.

A. PVT Corner Test

Fig. 11 shows the simulated waveforms of V_{IN} and I_{sw} in the proposed single TRNG with the three-state improved DCPLL

Authorized licensed use limited to: UNIVERSITY OF WESTERN ONTARIO. Downloaded on July 25,2020 at 21:33:20 UTC from IEEE Xplore. Restrictions apply.

This article has been accepted for inclusion in a future issue of this journal. Content is final as presented, with the exception of pagination.

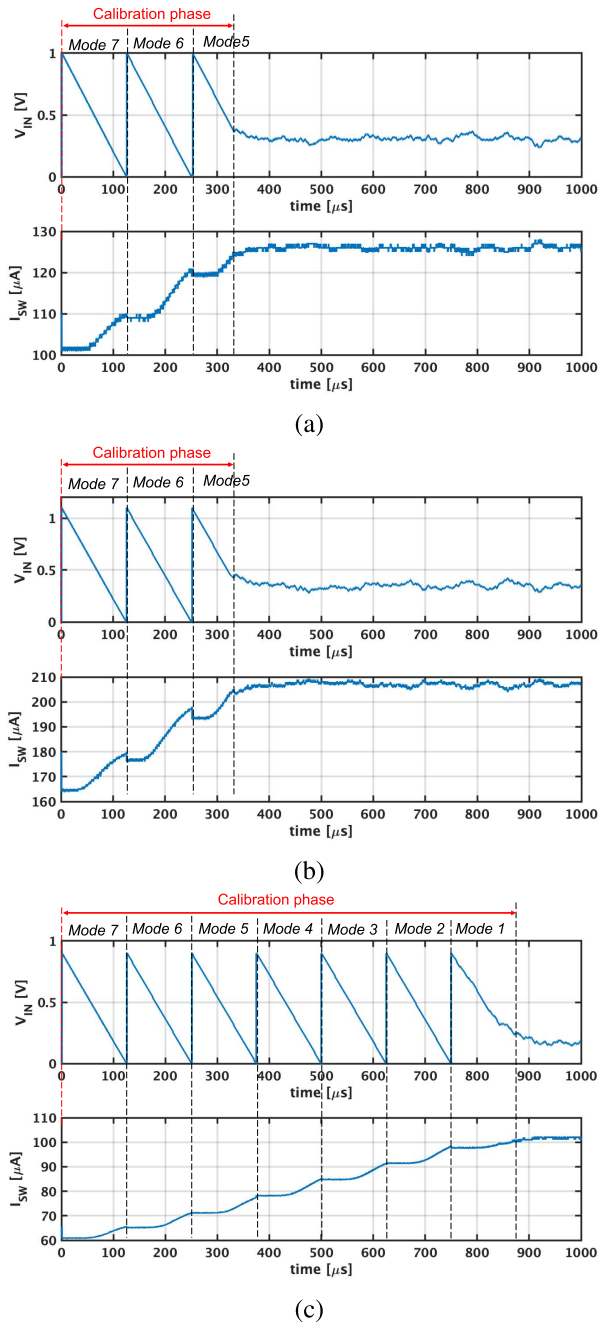

Fig. 11. Simulated calibration operations of the proposed single TRNG with the three-state improved DCPLL at $N = 64$ and different PVT corners. (a) TT, normal voltage (1.0 V), 27 °C. (b) FF, high voltage (1.1 V), −40 °C. (c) SS, low voltage (0.9 V), 80 °C.

at the calibration phase. N (the number of writing MTJs per V_{IN} control) is 64. In order to verify the variability resilience of the proposed single TRNG, three PVT corners are used in accordance with [19]. In the normal case (TT, normal voltage (1.0 V), 27 °C), the mode reaches to mode 5 from the initial mode (mode 7) and finally stabilizes V_{IN}. In the fast case (FF, high voltage (1.1 V), −40 °C), the mode changes to mode 5 that covers the desired I_{sw} of around 205 μA. In the slow case (SS, low voltage (0.9 V), 80 °C), the mode reaches to mode 1 that controls small I_{sw} as described in Fig. 2. As shown in this figure, V_{IN} and the mode of the RBG circuit automatically change in order to lock the switching probability of 50% at the different PVT corners.

Note that the stabilized I_{sw} are slightly different from that with the switching probability of 50% shown in Fig. 2 because of different simulation conditions. P_{sw} of Fig. 2 are obtained by simulations of the MTJ device model using I_{sw} of 5 ns without the rise/fall transition time. As opposed to the ideal case, I_{sw} of Fig. 11 includes the rise/fall transition time as the whole TRNG circuit is simulated.

B. Randomness Check Using NIST SP 800-22

Table III summarizes the NIST test results of the proposed single TRNGs in the normal corner condition. In the NIST SP 800-22 test [23], long bit streams are required. Hence, the proposed single and multiple TRNGs are fully designed using Verilog-A except the RBG circuit for faster simulations than a fully transistor-level one. Note that the Verilog-A design is used in this section. For hardware evaluation described in Sections VI-C and VI-D, the fully transistor-level design is used. In this article, 12 out of 15 NIST test items are selected in accordance with [40]. The other three test items (Universal, Random Excursions, and Random Excursions Variant) require long random bit streams, such as 10 million random bits, which could not be obtained for realistic time by simulation-based TRNGs. It would be possible to run all the NIST items in a DWM/CMOS-based TRNG chip, which could be fabricated as well as [32].

In this simulation, 550 000 random bits are generated. Using the two-state improved DCPLL, all items of the test are not passed under different N. In contrast, using the three-state improved DCPLL, all items of the test are passed when N is equal to and larger than 4096 bits. Longer random bits can easily stabilize V_{IN} as the variability of the switching probability can be mitigated, where the calibration time is longer. In addition, the proposed multiple TRNG with the three-state improved DCPLL passes the NIST test when N is equal to and larger than 1280 bits. Note that 1280 random bits are generated for 128 cycles, where ten random bits are generated every cycle in the proposed multiple TRNG. The detailed performance of the NIST test of the proposed single and multiple TRNGs is summarized in Table IV. In hardware evaluation, the three-state improved DCPLL is selected for the proposed single and multiple TRNGs.

In addition, the NIST test runs with variability of MTJ devices in the proposed multiple TRNG with the three-state improved DCPLL. Without device variability, I_{sw} is around 122 μA for the 50% switching probability at 27 °C, as shown in Fig. 2; however, the switching probability with device variability could vary at each MTJ device with the same I_{sw}, which could generate biased random bit streams. In order to check the NIST test with device variability, a switching-probability error is randomly added to each MTJ device. A mean absolute error of the ten MTJ devices, P_{MAE}, and the maximum absolute error, P_{ME}, are defined, respectively, as follows:

$$P_{MAE} = \sum_{i=1}^{10} \frac{|P_{SWVi} - P_{SW}|}{10} \tag{2}$$

$$P_{ME} = \max(|P_{SWVi} - P_{SW}|) \tag{3}$$

Authorized licensed use limited to: UNIVERSITY OF WESTERN ONTARIO. Downloaded on July 25,2020 at 21:33:20 UTC from IEEE Xplore. Restrictions apply.

This article has been accepted for inclusion in a future issue of this journal. Content is final as presented, with the exception of pagination.

TABLE III

NIST SP 800-22 TESTS IN THE PROPOSED SINGLE TRNGS

NIST test items	Improved DCPLL with 2 states				Improved DCPLL with 3 states			
	Number of generating bits per V_{in} control (N)							
	1,024	2,048	4,096	8,192	1,024	2,048	4,096	8,192
Frequency	Pass	Fail	Fail	Fail	Pass	Pass	Pass	Pass
Block Frequency	Fail	Fail	Pass	Fail	Pass	Pass	Pass	Pass
Cumulative Sums	Pass	Fail	Fail	Fail	Fail	Fail	Pass	Pass
Runs	Pass	Pass	Pass	Fail	Pass	Pass	Pass	Pass
Longest Run	Pass	Pass	Pass	Fail	Pass	Pass	Pass	Pass
Rank	Pass	Pass	Pass	Pass	Pass	Pass	Pass	Pass
FFT	Pass	Pass	Pass	Pass	Pass	Pass	Pass	Pass
Non Overlapping Template	Pass	Pass	Pass	Pass	Pass	Pass	Pass	Pass
Overlapping Template	Pass	Pass	Pass	Pass	Pass	Pass	Pass	Pass
Approximate Entropy	Fail	Pass	Pass	Pass	Pass	Pass	Pass	Pass
Serial	Pass	Pass	Pass	Pass	Pass	Pass	Pass	Pass
Line Complexity	Pass	Pass	Pass	Pass	Pass	Pass	Pass	Pass

TABLE IV

DETAILED NIST TEST RESULTS OF THE PROPOSED SINGLE AND MULTIPLE TRNGS USING THE THREE-STATE IMPROVED DCPLL

	Proposed single (N=4,096)	Proposed multiple (N=1,280)
Frequency	0.035174	0.122325
Block Frequency	0.035174	0.122325
Cumulative Sums	0.534146	0.534146
Runs	0.739918	0.122325
Longest Run	0.534146	0.534146
Rank	0.534146	0.534146
FFT	0.991468	0.739918
Non-Overlapping Template	0.213309	0.739918
Overlapping Template	0.350485	0.911413
Approximate Entropy	0.350485	0.739918
Serial	0.739918	0.534146
Linear Complexity	0.350485	0.739918

TABLE V

NIST TEST RESULTS OF THE PROPOSED MULTIPLE TRNG WITH THE VARIABILITY OF TEN MTJ DEVICES

	(P_{MAE}, P_{ME}) [%]		
	(2.8, 4.5)	(5.3, 8.6)	(7.7, 12.7)
Frequency	Pass	Pass	Pass
Block Frequency	pass	Pass	Pass
Cumulative Sums	Pass	Pass	Pass
Runs	Pass	Pass	Fail
Longest Run	Pass	Pass	Pass
Rank	Pass	Pass	Pass
FFT	Pass	Fail	Fail
Non-Overlapping Template	Pass	Pass	Pass
Overlapping Template	Pass	Pass	Pass
Approximate Entropy	Pass	Pass	Fail
Serial	Pass	Pass	Pass
Linear Complexity	Pass	Pass	Pass

where P_{SW} is the switching probability of the MTJ device without variability and P_{SWVi} is the switching probability of each MTJ device with variability. The DWM device used in this article has been demonstrated in [32]; however, the information of the switching-probability error has not been available. Therefore, device-variability effects are simulated at three different scenarios. The simulation results could help circuit designers to implement the proposed TRNG, if one can access to the MTJ devices. Table V summarizes the NIST test results. With P_{MAE} less than 5%, the proposed multiple TRNG passes all the 12 items of the NIST test. As the switching probability error is increased, several items of the NIST test fail, such as FFT, Runs, and Approximate Entropy. Several postprocessing techniques, such as XOR or Von-Neumann processing used in [16] and [20], would be applied for the proposed TRNGs, which could improve the quality of random bit streams under the device variability.

C. Hardware Performance

Fig. 12 summarizes the performance of the CMOS/MTJ-based TRNGs. First, the proposed single TRNG is compared with the conventional TRNG. As the proposed single TRNG reduces the bit precision of the DAC from 10 to 7, the area is reduced to 14%. In addition, as the power dissipation of the DAC is also reduced to 31%, the total power dissipation is reduced to 51% with the same throughput of 66.7 Mb/s.

TABLE VI

PERFORMANCE COMPARISONS OF CORE CIRCUITS OF CMOS/MTJ-BASED TRNGS

	[19]	[21]	Proposed multiple
Technology [nm]	28	45	65
Throughput [Mbps]	66.7	74	333
Energy [pJ/bit]	0.81	46.3	0.29
Core area [μm^2]	3.840	14.11	48.95
Normalized core area for 65 nm [μm^2]	20.69	29.44	48.95

Second, the proposed multiple TRNG is compared with the proposed single TRNG. The proposed multiple TRNG generates ten random bits during a cycle of 30 ns, which increases the throughput to 333 Mb/s. The power dissipation of the RBG of the proposed multiple TRNG is reduced by 50% in comparison with that of the proposed single TRNG as the operation cycle changes from 15 to 30 ns. In total, the power dissipation of the proposed multiple TRNG is reduced by 33%. As a result, the total energy dissipation of the proposed multiple TRNG is 0.66 pJ/bit that is 13% and 7% of the proposed single and conventional TRNGs, respectively.

D. Comparisons With Related Works

The proposed multiple TRNG is compared with CMOS/MTJ-based TRNGs as summarized in Table VI. Only the core circuit (RBG circuit) is evaluated as the conventional works design only the core circuit without

Authorized licensed use limited to: UNIVERSITY OF WESTERN ONTARIO. Downloaded on July 25,2020 at 21:33:20 UTC from IEEE Xplore. Restrictions apply.

This article has been accepted for inclusion in a future issue of this journal. Content is final as presented, with the exception of pagination.

TABLE VII
PERFORMANCE COMPARISONS OF TRNGS

	This work	[22]	[5]	[8]	[9]	[10]
Technology	65-nm CMOS + MTJ	28-nm CMOS + MTJ	28-nm CMOS	45-nm CMOS	40-nm CMOS	180-nm CMOS
Throughput [Mbps]	333	94.0-120.6	23.2	2,400	0.5	0.27
Energy [pJ/bit]	0.66	5.7-7.3	23.3	2.92	0.43	0.30
Area [μm^2]	2040.0	404.8	374.6	3999.4	1400.0	4471.2
Normalized area for 65 nm [μm^2]	2040.0	2181.5	2018.7	8344.4	3696.9	583.05

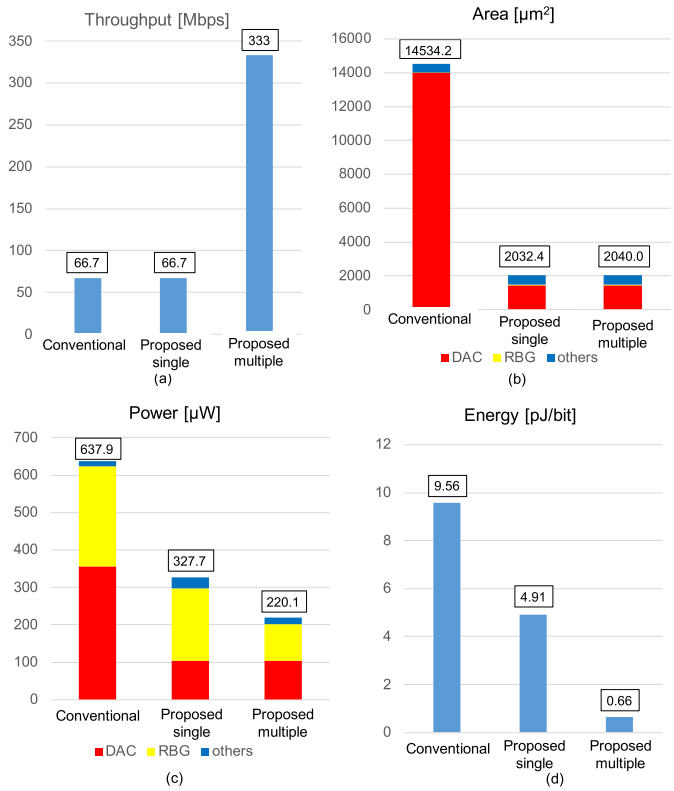

Fig. 12. Performance of the CMOS/MTJ-based TRNGs. (a) Throughput. (b) Area. (c) Power dissipation. (d) Energy dissipation.

a control circuit of MTJ devices. As different CMOS processes are used, the area of the conventional TRNGs in [19] and [21] is scaled to a 65-nm CMOS. In comparison with [19], the proposed multiple TRNG achieves a 64% reduction in energy dissipation and a five-time higher throughput.

Fig. 13 illustrates the comparisons of TRNGs including the CMOS-based TRNGs [5], [8]–[10] and the emerging-device-based TRNGs [13], [14]. Among the emerging-device-based TRNGs, the proposed multiple TRNG achieves the highest throughput and the lowest energy dissipation. Table VII summarizes the performance comparisons with the TRNGs, where the area is normalized to the 65-nm CMOS. Compared with the CMOS-based TRNGs, the proposed TRNG achieves less than 1 pJ/bit while maintaining the high throughput, unlike low-throughput TRNGs with lower energy dissipations [9], [10]. In comparison with the highest throughput TRNG [8], the proposed one achieves 4.4-times better energy efficiency. The CMOS/MTJ-based TRNG in [22] designs only

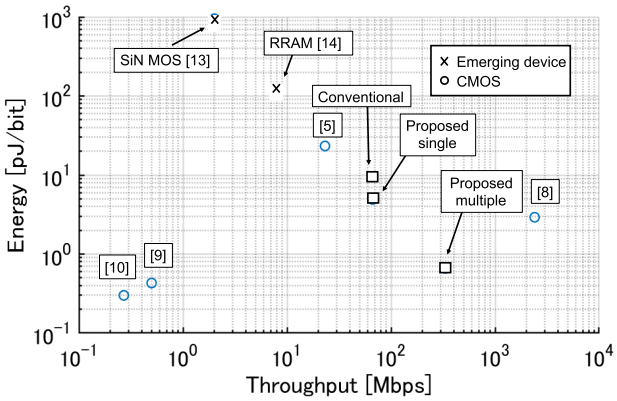

Fig. 13. Performance comparisons of TRNGs. Among the emerging-device-based TRNGs, the proposed multiple TRNG achieves the highest throughput and the lowest energy dissipation.

the core circuit as well as [17] and [19] while the area of control circuit was estimated. In comparison with [22], the proposed multiple TRNG exhibits 2.7-times higher throughput and 11-times better energy efficiency while maintaining the similar circuit area.

VII. CONCLUSION

In this article, high-throughput/low-energy CMOS/MTJ-based TRNGs have been designed for IoT applications. Using the improved DCPLL, the proposed TRNGs correctly operate at the PVT corners and exhibit high quality of random numbers generated with the NIST statistical tests (SP 800-22). In addition, the multi-V/I converter and the multiple-writing scheme improve the performance with solving the high sensitivity of the MTJ devices. The proposed multiple TRNG achieves the throughput of 333 Mb/s and the energy of 0.66 pJ/bit, exhibiting the highest throughput and the lowest energy dissipation among the emerging device-based TRNGs. In comparison with the CMOS-based TRNGs, the proposed multiple TRNG achieves balanced performance in throughput, energy dissipation, and area.

REFERENCES

[1] D. Bol, G. de Streel, and D. Flandre, "Can we connect trillions of IoT sensors in a sustainable way? A technology/circuit perspective (invited)," in *Proc. IEEE SOI-3D-Subthreshold Microelectron. Technol. Unified Conf. (S3S)*, Oct. 2015, pp. 1–3.

[2] G. Souaki and K. Halim, "Random number generation based on MCU sources for IoT application," in *Proc. Int. Conf. Adv. Technol. Signal Image Process. (ATSIP)*, May 2017, pp. 1–6.

[3] T. Stojanovski and L. Kocarev, "Chaos-based random number generators—Part I: Analysis [cryptography]," *IEEE Trans. Circuits Syst. I, Fundam. Theory Appl.*, vol. 48, no. 3, pp. 281–288, Mar. 2001.

Authorized licensed use limited to: UNIVERSITY OF WESTERN ONTARIO. Downloaded on July 25,2020 at 21:33:20 UTC from IEEE Xplore. Restrictions apply.

This article has been accepted for inclusion in a future issue of this journal. Content is final as presented, with the exception of pagination.

[4] B. Sunar, W. Martin, and D. Stinson, "A provably secure true random number generator with built-in tolerance to active attacks," *IEEE Trans. Comput.*, vol. 56, no. 1, pp. 109–119, Jan. 2007.

[5] K. Yang, D. Fick, M. B. Henry, Y. Lee, D. Blaauw, and D. Sylvester, "16.3 A 23Mb/s 23pJ/b fully synthesized true-random-number generator in 28 nm and 65 nm CMOS," in *IEEE Int. Solid-State Circuits Conf. (ISSCC) Dig. Tech. Papers*, Feb. 2014, pp. 280–281.

[6] S. Robson, B. Leung, and G. Gong, "Truly random number generator based on a ring oscillator utilizing last passage time," *IEEE Trans. Circuits Syst. II, Exp. Briefs*, vol. 61, no. 12, pp. 937–941, Dec. 2014.

[7] U. Guler, A. E. Pusane, and G. Dundar, "Investigating flicker noise effect on randomness of CMOS ring oscillator based true random number generators," in *Proc. Int. Conf. Inf. Sci., Electron. Electr. Eng.*, vol. 2, Apr. 2014, pp. 845–849.

[8] S. Srinivasan *et al.*, "2.4GHz 7 mW all-digital PVT-variation tolerant true random number generator in 45nm CMOS," in *Proc. Symp. VLSI Circuits*, Jun. 2010, pp. 203–204.

[9] T.-K. Kuan, Y.-H. Chiang, and S.-I. Liu, "A 0.43pJ/bit true random number generator," in *Proc. IEEE Asian Solid-State Circuits Conf. (A-SSCC)*, Nov. 2014, pp. 33–36.

[10] M. Kim, U. Ha, Y. Lee, K. Lee, and H.-J. Yoo, "A 82nW chaotic-map true random number generator based on sub-ranging SAR ADC," in *Proc. ESSCIRC Conf., 42nd Eur. Solid-State Circuits Conf.*, Sep. 2016, pp. 157–160.

[11] C. K. Volos, I. M. Kyprianidis, and I. N. Stouboulos, "Image encryption process based on a chaotic true random bit generator," in *Proc. 16th Int. Conf. Digit. Signal Process.*, Jul. 2009, pp. 1–4.

[12] Y. Yamanashi and N. Yoshikawa, "Superconductive random number generator using thermal noises in SFQ circuits," *IEEE Trans. Appl. Supercond.*, vol. 19, no. 3, pp. 630–633, Jun. 2009.

[13] M. Matsumoto, S. Yasuda, R. Ohba, K. Ikegami, T. Tanamoto, and S. Fujita, "1200 μm^2 physical random-number generators based on SiN MOSFET for secure smart-card application," in *IEEE Int. Solid-State Circuits Conf. (ISSCC) Dig. Tech. Papers*, Feb. 2008, pp. 414–624.

[14] J. Yang, Y. Lin, Y. Fu, X. Xue, and B. A. Chen, "A small area and low power true random number generator using write speed variation of oxidebased RRAM for IoT security application," in *Proc. IEEE Int. Symp. Circuits Syst. (ISCAS)*, May 2017, pp. 1–4.

[15] S. Ikeda *et al.*, "A perpendicular-anisotropy CoFeB–MgO magnetic tunnel junction," *Nature Mater.*, vol. 9, pp. 721–724, Jul. 2010.

[16] A. Fukushima *et al.*, "Spin dice: A scalable truly random number generator based on spintronics," *Appl. Phys. Express*, vol. 7, no. 8, Aug. 2014, Art. no. 083001. [Online]. Available: http://stacks.iop.org/1882-0786/7/i=8/a=083001

[17] S. Oosawa, T. Konishi, N. Onizawa, and T. Hanyu, "Design of an STT-MTJ based true random number generator using digitally controlled probability-locked loop," in *Proc. IEEE 13th Int. New Circuits Syst. Conf. (NEWCAS)*, Jun. 2015, pp. 1–4.

[18] Y. Wang, H. Cai, L. A. B. Naviner, J.-O. Klein, J. Yang, and W. Zhao, "A novel circuit design of true random number generator using magnetic tunnel junction," in *Proc. IEEE/ACM Int. Symp. Nanosc. Archit. (NANOARCH)*, Jul. 2016, pp. 123–128.

[19] Y. Qu *et al.*, "Variation-resilient true random number generators based on multiple STT-MTJs," *IEEE Trans. Nanotechnol.*, vol. 17, no. 6, pp. 1270–1281, Nov. 2018.

[20] F. Ouattara, A. Nejat, L. Torres, and K. Mackay, "Practical experiments on fabricated TAS-MRAM dies to evaluate the stochastic behavior of voltage-controlled TRNGs," *IEEE Access*, vol. 7, pp. 59271–59277, 2019.

[21] E. I. Vatajelu and G. Di Natale, "High-entropy STT-MTJ-based TRNG," *IEEE Trans. Very Large Scale Integr. (VLSI) Syst.*, vol. 27, no. 2, pp. 491–495, Feb. 2019.

[22] B. Perach and S. Kvatinsky, "An asynchronous and low-power true random number generator using STT-MTJ," *IEEE Trans. Very Large Scale Integr. (VLSI) Syst.*, vol. 27, no. 11, pp. 2473–2484, Nov. 2019.

[23] V. Shen, D. Siderius, W. Krekelberg, and H. Hatch Eds., "NIST standard reference simulation Website," Nat. Inst. Standards Technol., Gaithersburg, MD, USA, NIST Standard Reference Database Number 173, 2010.

[24] Q. Fan and J. Chen, "A 10-bit 400 MS/s asynchronous SAR ADC using dual-DAC architecture for speed enhancement," in *Proc. IEEE 60th Int. Midwest Symp. Circuits Syst. (MWSCAS)*, Aug. 2017, pp. 583–586.

[25] J. Kim, W. Jang, Y. Lee, S. Oh, J. Lee, and T. Cho, "A 12-b, 1-GS/s 6.1 mW current-steering DAC in 14 nm FinFET with 80 dB SFDR for 2G/3G/4G cellular application," in *Proc. IEEE Radio Freq. Integr. Circuits Symp. (RFIC)*, Jun. 2017, pp. 248–251.

[26] K.-H. Cheng, H.-H. Wang, and D.-J. Huang, "A 1-V 10-bit 2GSample/s D/A converter based on precision current reference in 90-nm CMOS," in *Proc. 15th IEEE Int. Conf. Electron., Circuits Syst.*, Aug. 2008, pp. 340–343.

[27] B. Schafferer and R. Adams, "A 3 V CMOS 400 mW 14b 1.4GS/s DAC for multi-carrier applications," in *IEEE Int. Solid-State Circuits Conf. (ISSCC) Dig. Tech. Papers*, vol. 1, Feb. 2004, pp. 360–532.

[28] M.-J. Choe, K.-H. Baek, and M. Teshome, "A 1.6-GS/s 12-bit return-to-zero GaAs RF DAC for multiple Nyquist operation," *IEEE J. Solid-State Circuits*, vol. 40, no. 12, pp. 2456–2468, Dec. 2005.

[29] J. Cao, H. Lin, Y. Xiang, C. Kao, and K. Dyer, "A 10-bit 1GSample/s DAC in 90nm CMOS for embedded applications," in *Proc. IEEE Custom Integr. Circuits Conf.*, Sep. 2006, pp. 165–168.

[30] S. Mukaida, N. Onizawa, and T. Hanyu, "Design of a low-power MTJ-based true random number generator using a multi-voltage/current converter," in *Proc. IEEE 48th Int. Symp. Multiple-Valued Log. (ISMVL)*, May 2018, pp. 156–161.

[31] S. Fukami *et al.*, "Low-current perpendicular domain wall motion cell for scalable high-speed MRAM," in *Proc. Symp. VLSI Technol.*, Jun. 2009, pp. 230–231.

[32] Y. Tsuji *et al.*, "Spintronics primitive gate with high error correction efficiency 6(Perror)2 for logic-in memory architecture," in *Proc. Symp. VLSI Technol. (VLSIT)*, Jun. 2012, pp. 63–64.

[33] N. Sakimura *et al.*, "High-speed simulator including accurate MTJ models for spintronics integrated circuit design," in *Proc. IEEE Int. Symp. Circuits Syst.*, May 2012, pp. 1971–1974.

[34] B. N. Engel *et al.*, "The science and technology of magnetoresistive tunneling memory," *IEEE Trans. Nanotechnol.*, vol. 1, no. 1, pp. 32–38, Mar. 2002.

[35] K. Yagami, A. A. Tulapurkar, A. Fukushima, and Y. Suzuki, "Inspection of intrinsic critical currents for spin-transfer magnetization switching by low-temperature measurements," in *Proc. INTERMAG Asia . Dig. IEEE Int. Magn. Conf.,* Apr. 2005, pp. 145–146.

[36] Y. Zhang *et al.*, "Multi-level cell spin transfer torque MRAM based on stochastic switching," in *Proc. 13th IEEE Int. Conf. Nanotechnol. (IEEE-NANO)*, Aug. 2013, pp. 233–236.

[37] A. F. Vincent *et al.*, "Spin-transfer torque magnetic memory as a stochastic memristive synapse," in *Proc. IEEE Int. Symp. Circuits Syst. (ISCAS)*, Jun. 2014, pp. 1074–1077.

[38] S. Fukami, M. Yamanouchi, S. Ikeda, and H. Ohno, "Depinning probability of a magnetic domain wall in nanowires by spin-polarized currents," *Nature Commun.*, vol. 4, no. 1, p. 2293, Aug. 2013.

[39] T. Ohsawa *et al.*, "A 1.5nsec/2.1nsec random read/write cycle 1Mb STT-RAM using 6T2MTJ cell with background write for nonvolatile e-memories," in *Proc. Symp. VLSI Circuits*, Jun. 2013, pp. C110–C111.

[40] R. Govindaraj, S. Ghosh, and S. Katkoori, "CSRO-based reconfigurable true random number generator using RRAM," *IEEE Trans. Very Large Scale Integr. (VLSI) Syst.*, vol. 26, no. 12, pp. 2661–2670, Dec. 2018.

Naoya Onizawa (Member, IEEE) received the B.E., M.E., and D.E. degrees in electrical and communication engineering from Tohoku University, Sendai, Japan, in 2004, 2006, and 2009, respectively.

He is currently an Assistant Professor with the Research Institute of Electrical Communication, Tohoku University, and a JST PRESTO Researcher, Japan. He was a Postdoctoral Fellow at the University of Waterloo, Waterloo, ON, Canada, in 2011, and at McGill University, Montreal, QC, Canada, from 2011 to 2013. In 2015, he was a Visiting Associate Professor with the University of Southern Brittany, Lorient, France. His main interests and activities are the energy-efficient VLSI design based on asynchronous circuits and probabilistic computation and their applications, such as brain-like computers.

Dr. Onizawa received the Best Paper Award in 2010 IEEE ISVLSI, the Best Paper Finalist in 2014 IEEE ASYNC, the Kenneth C. Smith Early Career Award for Microelectronics Research in 2016 IEEE ISMVL, and the MEXT Young Scientists' Prize, Japan, in 2020.

Authorized licensed use limited to: UNIVERSITY OF WESTERN ONTARIO. Downloaded on July 25,2020 at 21:33:20 UTC from IEEE Xplore. Restrictions apply.

This article has been accepted for inclusion in a future issue of this journal. Content is final as presented, with the exception of pagination.

Shogo Mukaida received the B.E. degree in electrical and electronic engineering from Akita University, Akita, Japan, in 2017, and the M.E. degree in communication engineering from Tohoku University, Sendai, Japan, in 2019.

His research interests include design of a true random number generator and its application to stochastic-computing LSI systems.

Akira Tamakoshi received the B.S. degree from Nagoya University, Nagoya, Japan, in 1984.

From 1984 to 1992, he was with NEC, Tokyo, Japan, where he was involved in the design and development of versatile DRAMs. From 1992 to 1997 and from 2001 to 2008, he was with Fujifilm Microdevices (Fujifilm Photonics), and was involved in the design and development of IEEE 1394 (FireWire) Physical-Layer LSIs used for the PC, and CCDs and CCD-driver LSIs for the digital camera. From 1997 to 2001, he was with Yamaha, and was involved in the design and development of laser-driver and signal-processing LSIs for the CD/DVD-driver. Since 2010, he has been a Research Fellow with the Center for Science and Innovation in Spintronics (CSIS), Tohoku University, Sendai, Japan. His main interest and activity is in developing a design of high-speed low-power VLSI.

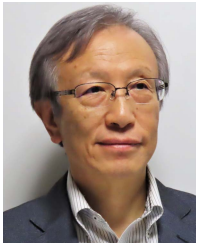

Hitoshi Yamagata received the B.E. and M.S. degrees from the Department of Electronic Engineering, Tohoku University, Sendai, Japan, in 1978 and 1980, respectively, and the Ph.D. degree from the Department of Information Engineering, Tohoku University in 1983.

He joined the Division of Medical Systems, Toshiba, Minato, Japan, in 1983, and has been developing full-digital X-ray system since 1984. He was a Postdoctoral Research Fellow at the University of California at San Francisco, San Francisco, CA, USA, and the University of California at Davis, Davis, CA, USA, from 1987 to 1990. He has been involved in the research and development of 1.5T MRI system and 3-D ultrasound system as a System Manager since 1991. He has been managing software development of clinical applications for medical diagnostic imaging systems, including CT, MRI, and ultrasound, since 2003. He has been a Senior Fellow since 2009. After CANON acquired the division in 2016, he has been a Fellow in CANON Medical Systems Corporation (CMSC), Otawara, Japan, where he is currently a member of the Advanced Research Laboratory.

Hiroyuki Fujita received the B.S., M.S., and Ph.D. degrees in electrical engineering from The University of Tokyo, Tokyo, Japan, in 1975, 1977, and 1980, respectively.

He has been the Director of the Advanced Research Laboratory, CANNON Medical Systems Corporation, Otawara, Japan, since 2017. He is also a Professor of Tokyo City University, Tokyo, and a Professor Emeritus of The University of Tokyo, where he served as a Professor with the Institute of Industrial Science for over 38 years. He was a Visiting Professor with MIT, Cambridge, MA, USA, and UC Berkeley, Berkeley, CA, USA. He is currently involved in the investigation of MEMS/NEMS and applications to bio/nanotechnology and IoT. He has published more than 300 academic papers.

Dr. Fujita received many awards, including the l'Ordre des Palmes Academiques from the Government of France, Docteur Honoris Causa from the École Normale Supérieure de Cachan, the Prize for Science and Technology—Research Category from the Ministry of Education, Culture, Sports, Science and Technology, the Outstanding Achievement Award from the Institute of Electrical Engineers of Japan, and the IEEE Robert Bosch Award for MEMS.

Takahiro Hanyu (Senior Member, IEEE) received the B.E., M.E., and D.E. degrees in electronic engineering from Tohoku University, Sendai, Japan, in 1984, 1986, and 1989, respectively.

He is currently a Professor and the Vice Director of the Research Institute of Electrical Communication, Tohoku University. His general research interests include nonvolatile logic circuits and their applications to ultralow-power and/or highly dependable VLSI processors, and postbinary computing and its application to brain-inspired VLSI systems.

Dr. Hanyu received the Sakai Memorial Award from the Information Processing Society of Japan in 2000, the Judge's Special Award at the 9th LSI Design of the Year from the Semiconductor Industry News of Japan in 2002, the Special Feature Award at the University LSI Design Contest from ASP-DAC in 2007, the APEX Paper Award of the Japan Society of Applied Physics in 2009, the Excellent Paper Award of IEICE, Japan, in 2010, the Ichimura Academic Award in 2010, the Best Paper Award of the IEEE ISVLSI 2010, the Paper Award of SSDM 2012, the Best Paper Finalist of IEEE ASYNC 2014, and the Commendation for Science and Technology by MEXT, Japan, in 2015.

Authorized licensed use limited to: UNIVERSITY OF WESTERN ONTARIO. Downloaded on July 25,2020 at 21:33:20 UTC from IEEE Xplore. Restrictions apply.