http://longqiu.taobao.com/

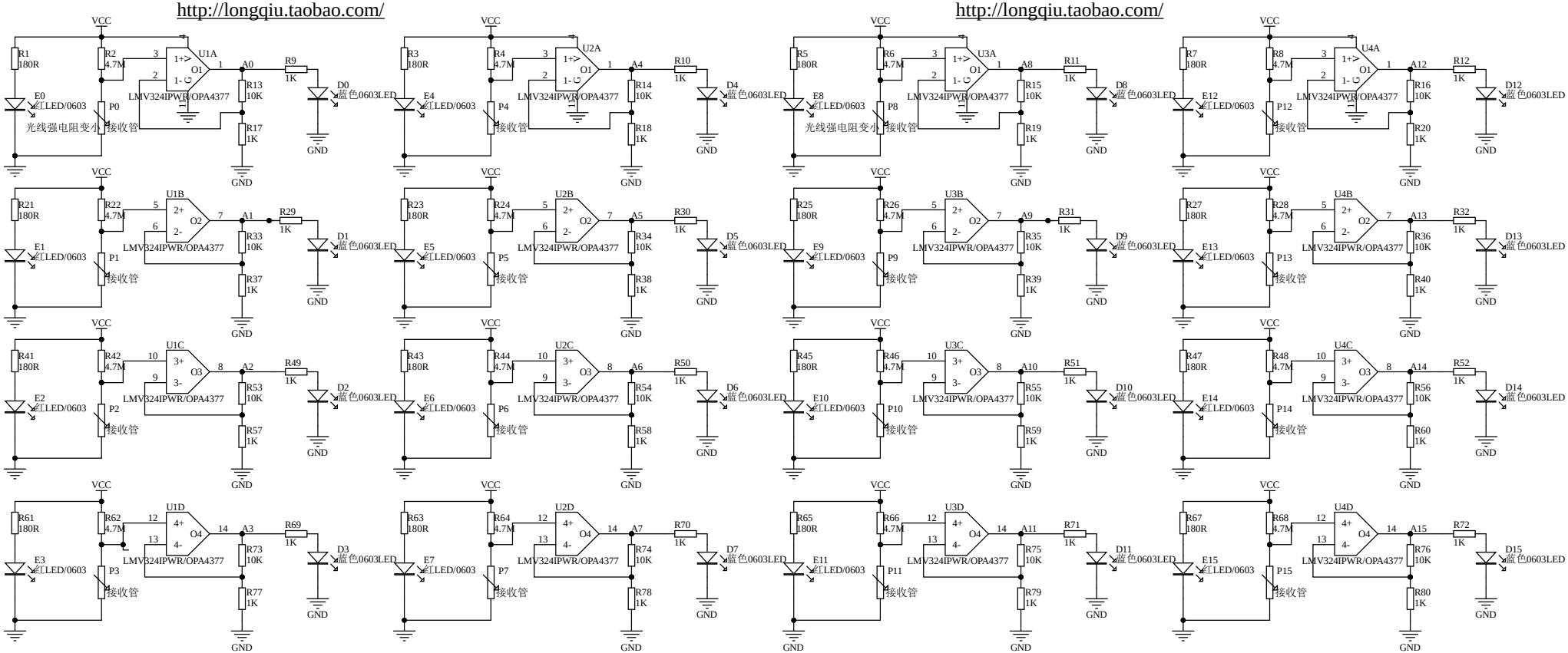

http://longqiu.taobao.com/

http://longqiu.taobao.com/

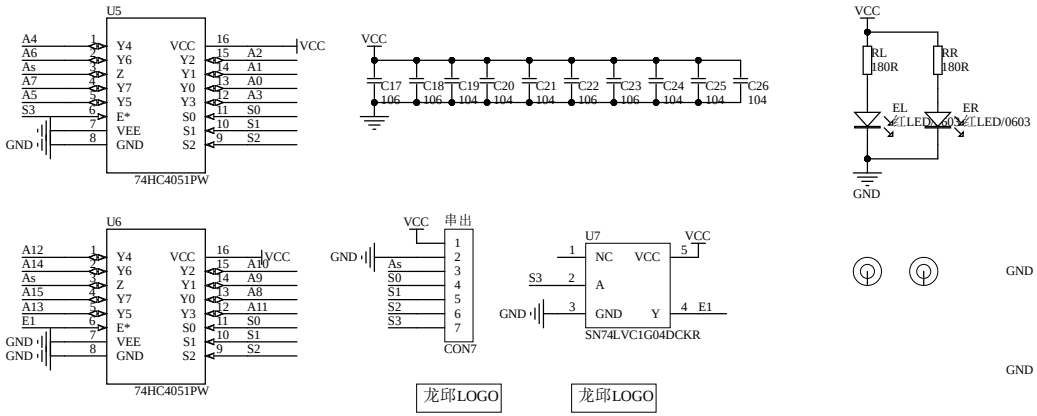

龙邱LOGO

龙邱LOGO

Title	龙邱科技十六路灰度模块A16W124x8V2	
Size A3	Number	Revision
Date: 1/06/2026	Sheet of	
File: F:\PcbPrj\..\LQA16W140H19D8V2.SchDoc	Drawn By:	

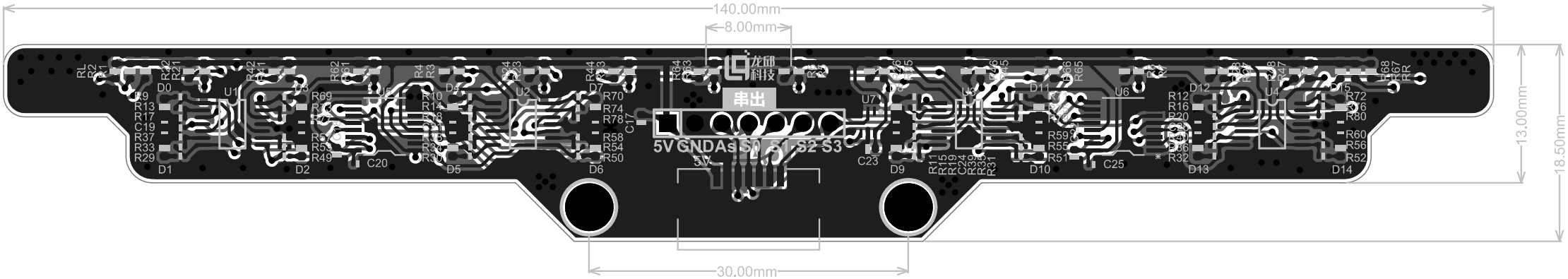
140.00mm
8.00mm
13.00mm
18.50mm
30.00mm
串出
5V GND As S0 S1 S2 S3