MEASUREMENT MODULE - MAIN

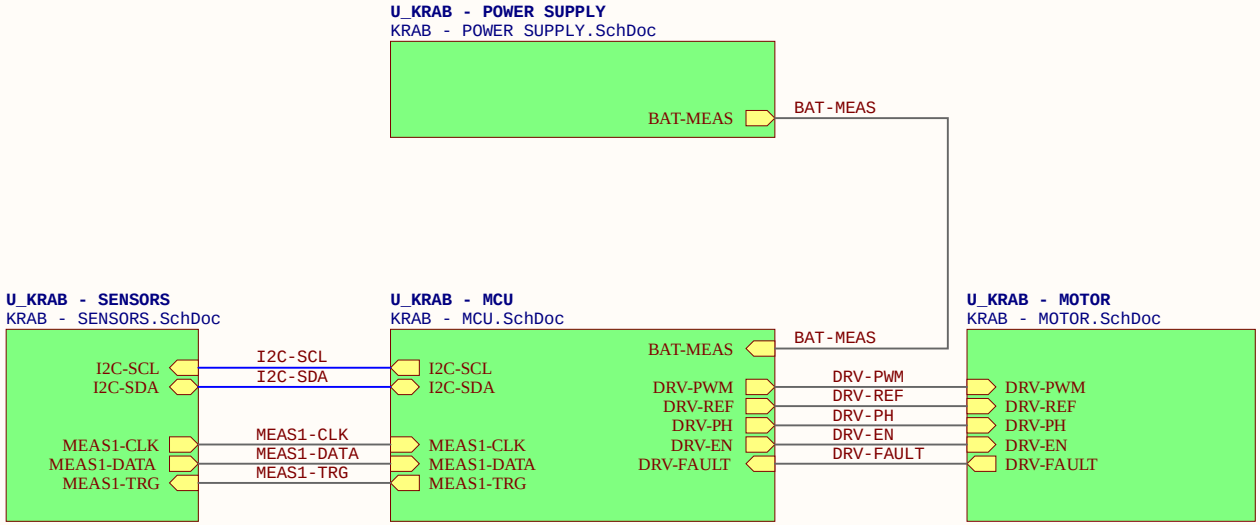

U_KRAB - BLOCK DIAGRAM
KRAB - BLOCK DIAGRAM.SchDoc

Title: KRAB - MAIN		
Size: A4	Number:	Revision:
Date: 2.18.2026		Sheet of
File: C:\Users\..\KRAB - MAIN.SchDoc		Drawn By:

MEASUREMENT MODULE

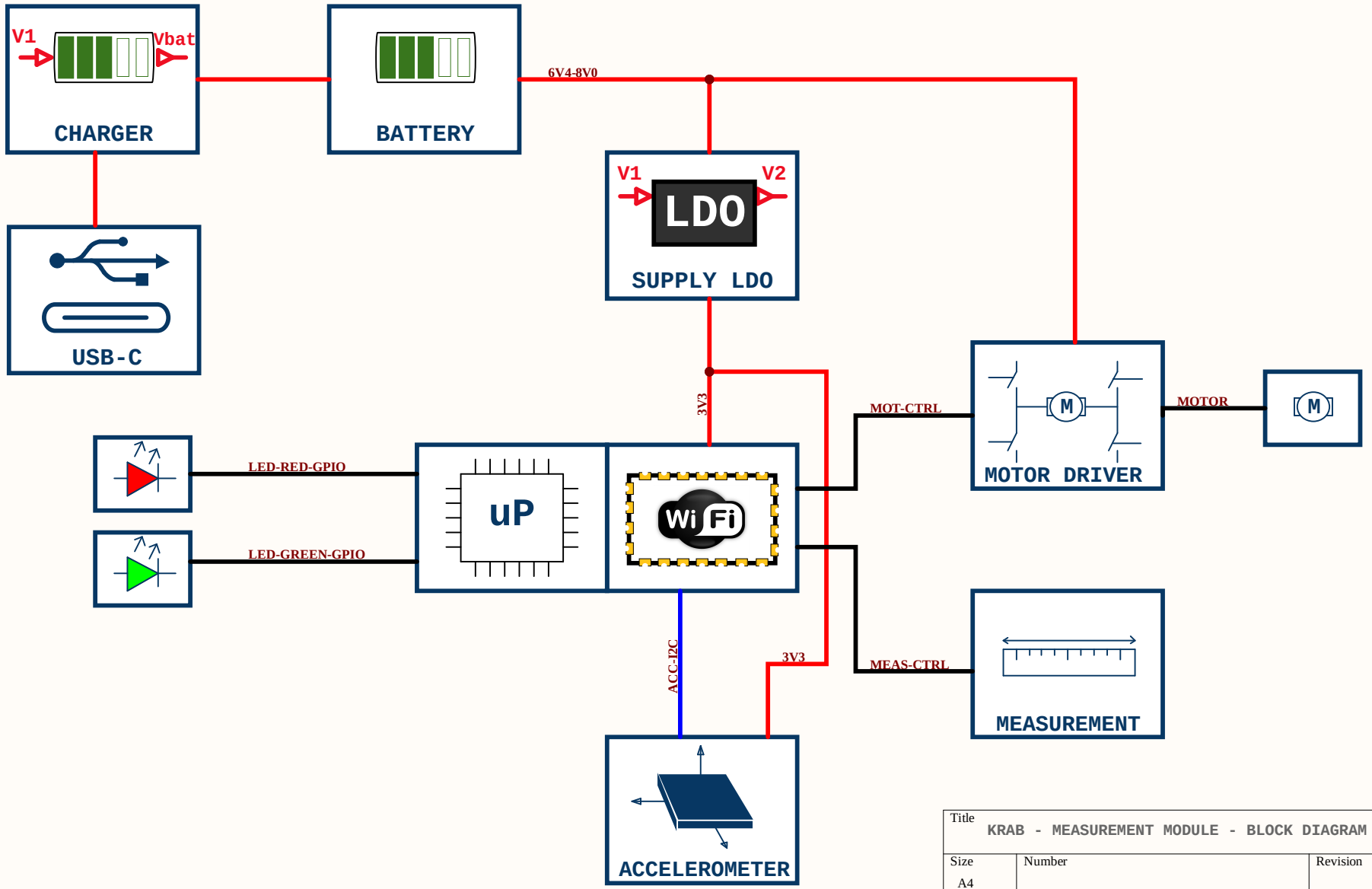

Title	KRAB - MEASUREMENT MODULE - BLOCK DIAGRAM	
Size A4	Number	Revision
Date: 2.18.2026	Sheet of	
File: C:\Users\..\KRAB - BLOCK DIAGRAM.SchDoc	Drawn By: SZYBISTY MICHAŁ	

MEASUREMENT MODULE - POWER

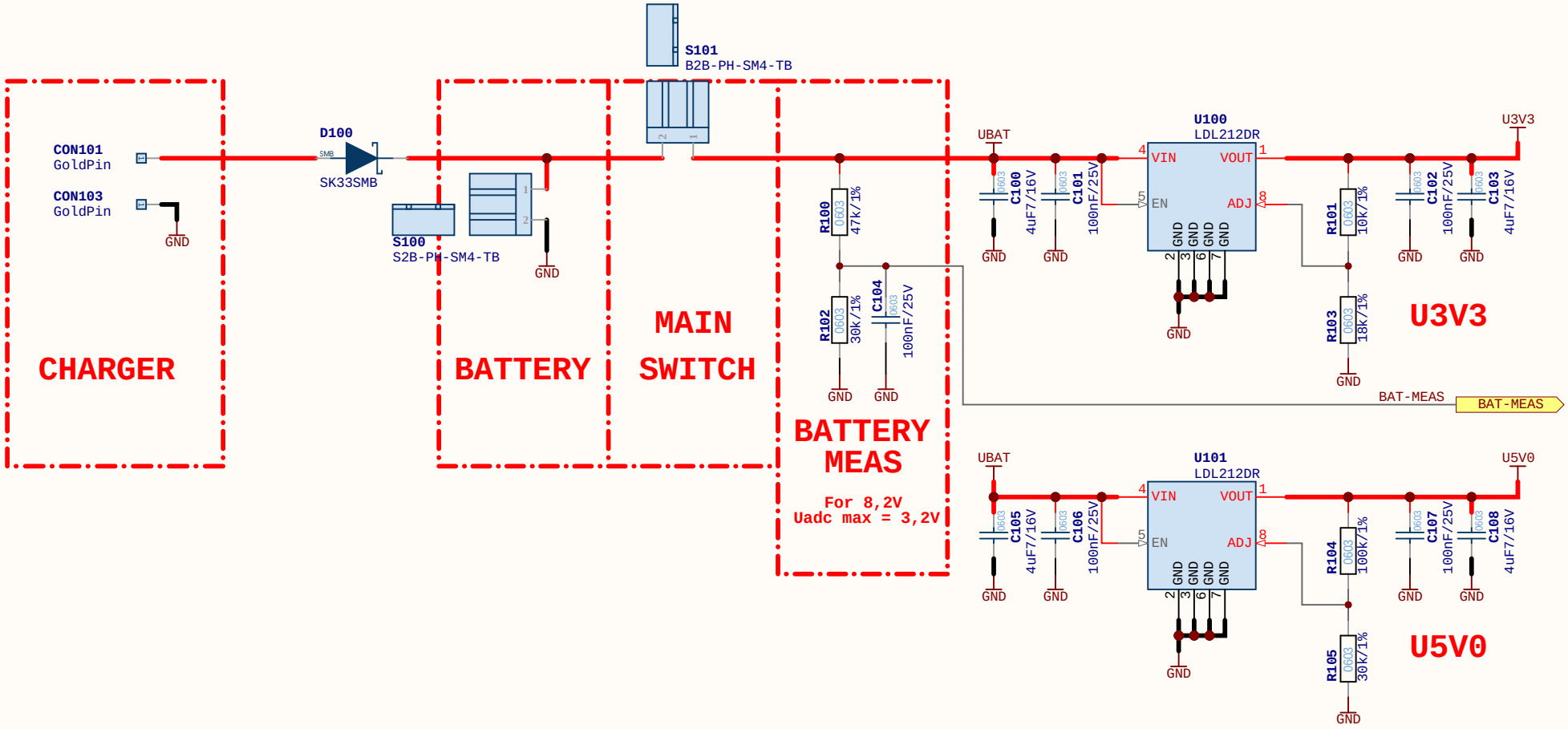

Title	KRAB - POWER SUPPLY	
Size: A4	Number:	Revision:
Date: 2.18.2026		Sheet of
File: C:\Users\..\KRAB - POWER SUPPLY.SchDoc		Drawn By:

MEASUREMENT MODULE - MCU

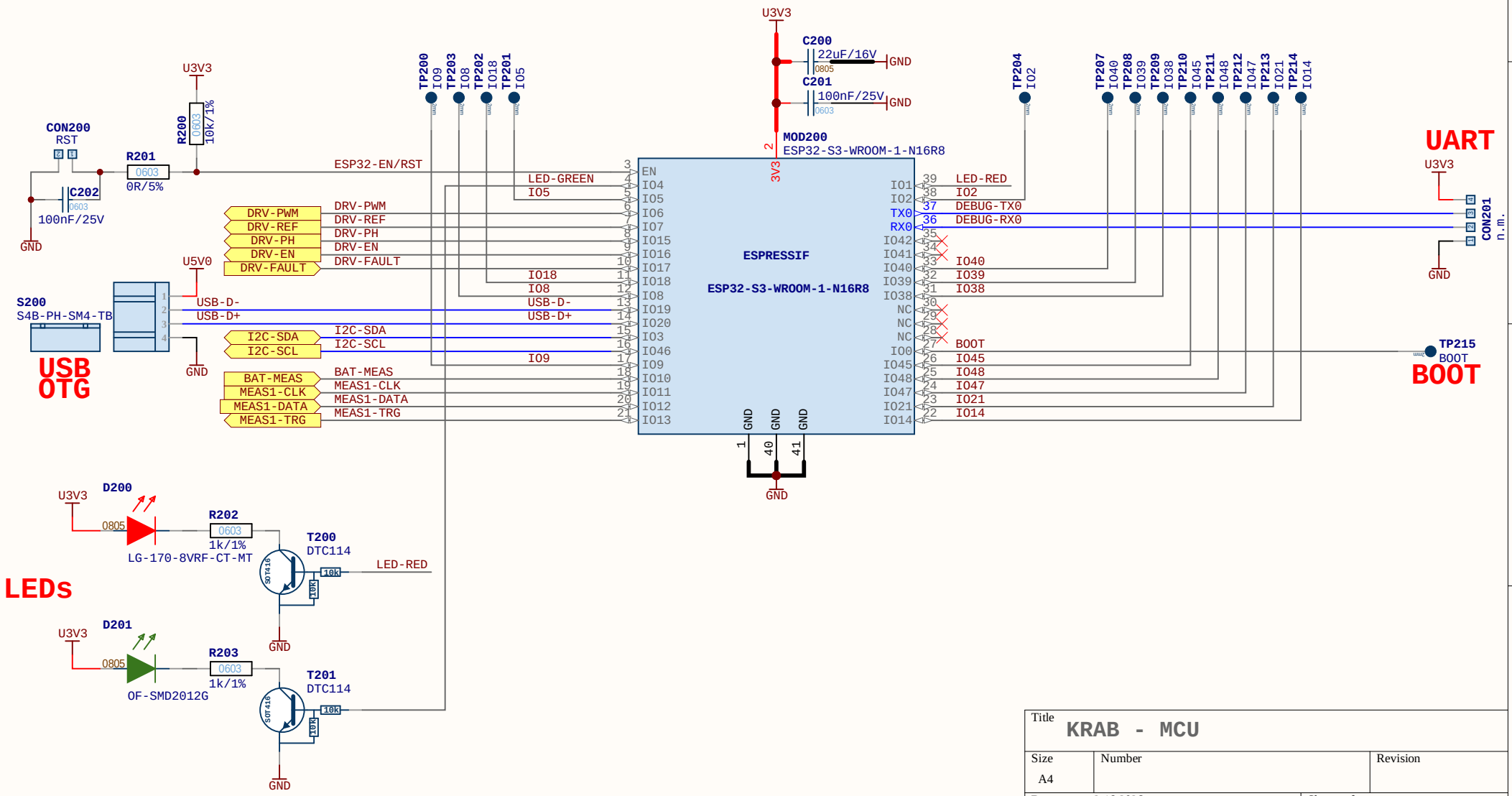

Title	KRAB - MCU	
Size: A4	Number	Revision
Date: 2.18.2026		Sheet of
File: C:\Users\..\KRAB - MCU.SchDoc		Drawn By:

MEASUREMENT MODULE - SENSORS

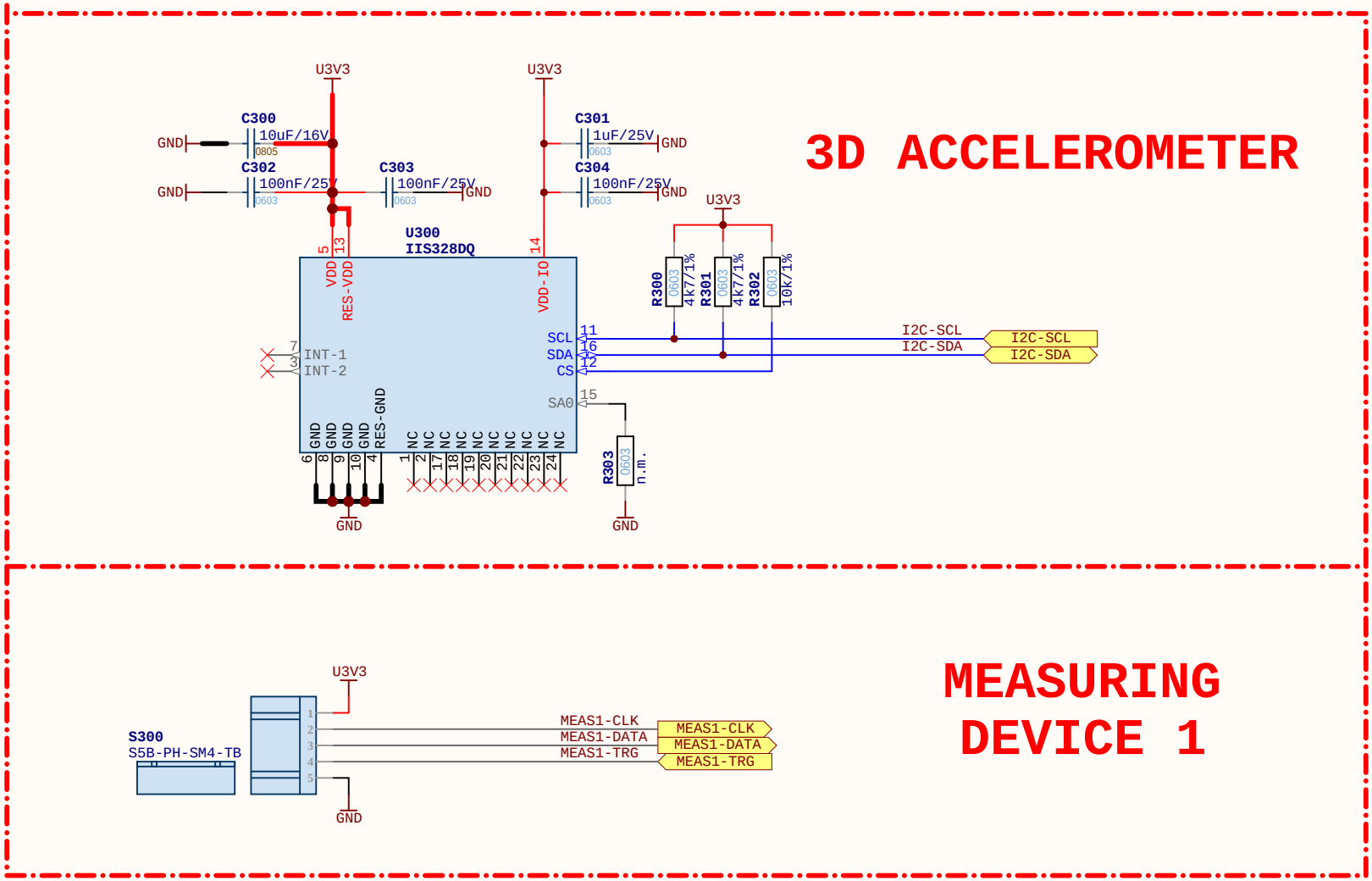

Title	KRAB - SENSORS	
Size: A4	Number:	Revision:
Date: 2.18.2026	Sheet of	
File: C:\Users\..\KRAB - SENSORS.SchDoc	Drawn By:	

MEASUREMENT MODULE - MOTOR

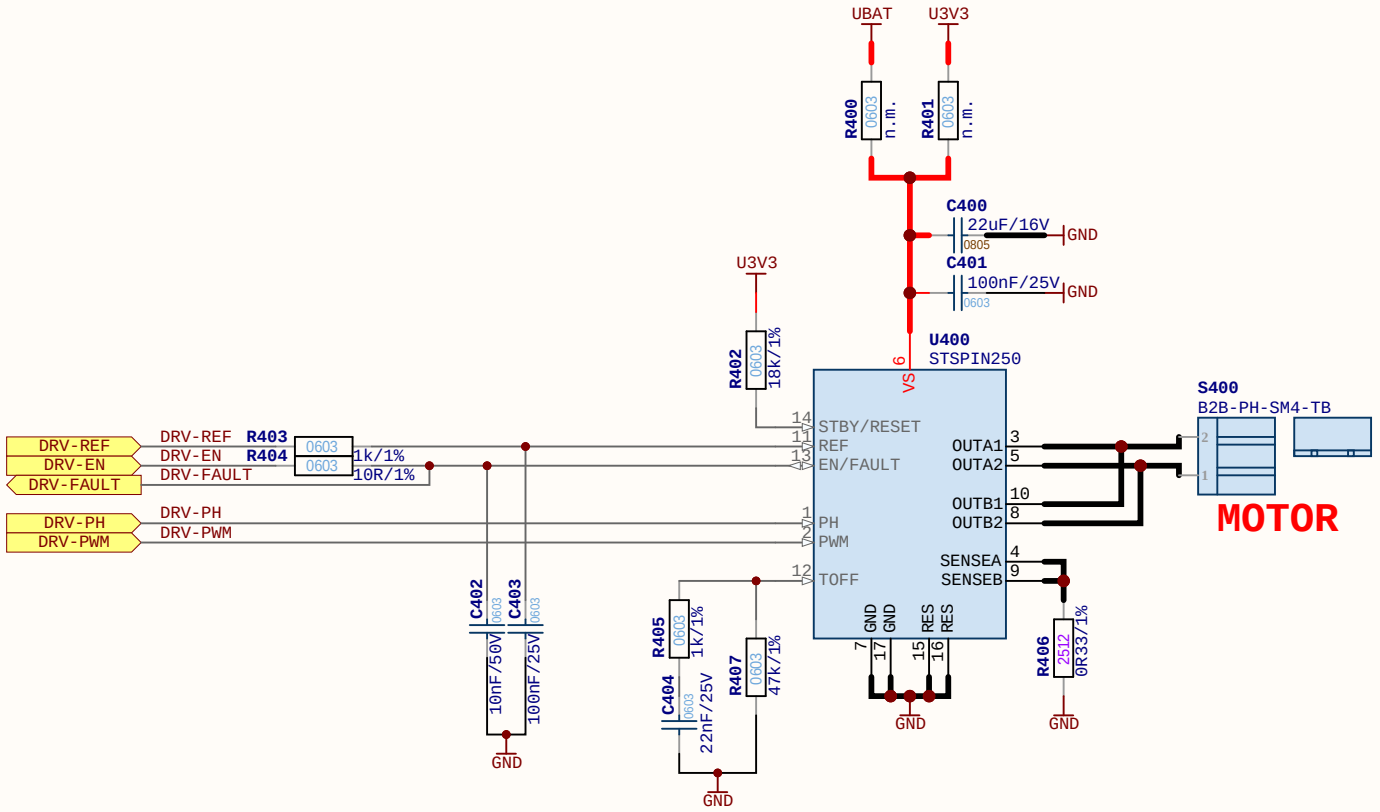

Title	KRAB - MOTOR	
Size: A4	Number:	Revision:
Date: 2.18.2026		Sheet of
File: C:\Users\..\KRAB - MOTOR.SchDoc		Drawn By:

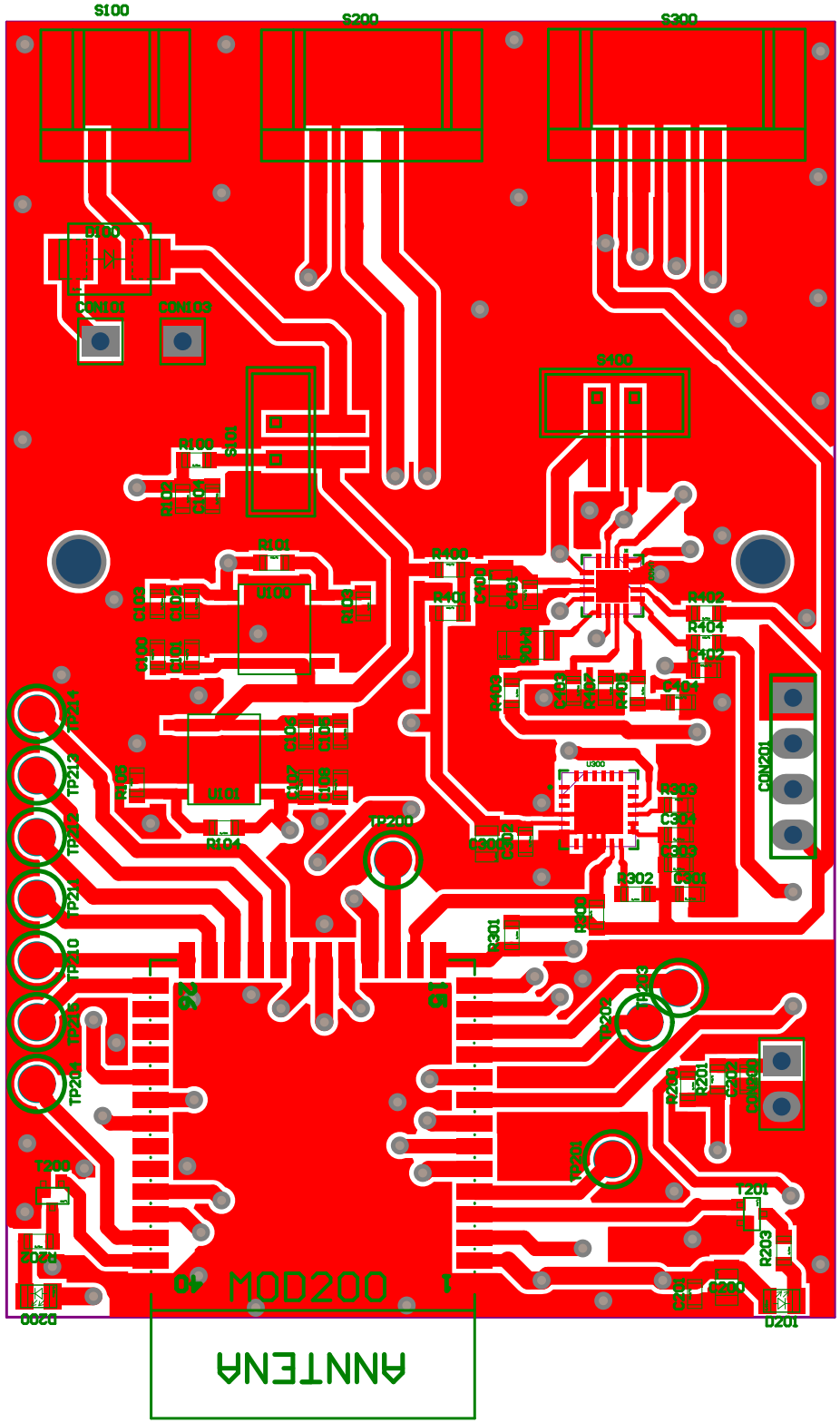
S100
S200
S300
D100
CON102
S400
R100
R101
U100
R400
R402
R404
C402
C404
U300
R303
C304
C303
R302
C301
CON201
TP212
TP214
TP210
TP200
R104
U101
R301
R202
R201
C202
C203
T200
T201
R203
C200
D200
D201
MOD200
ANNTENA

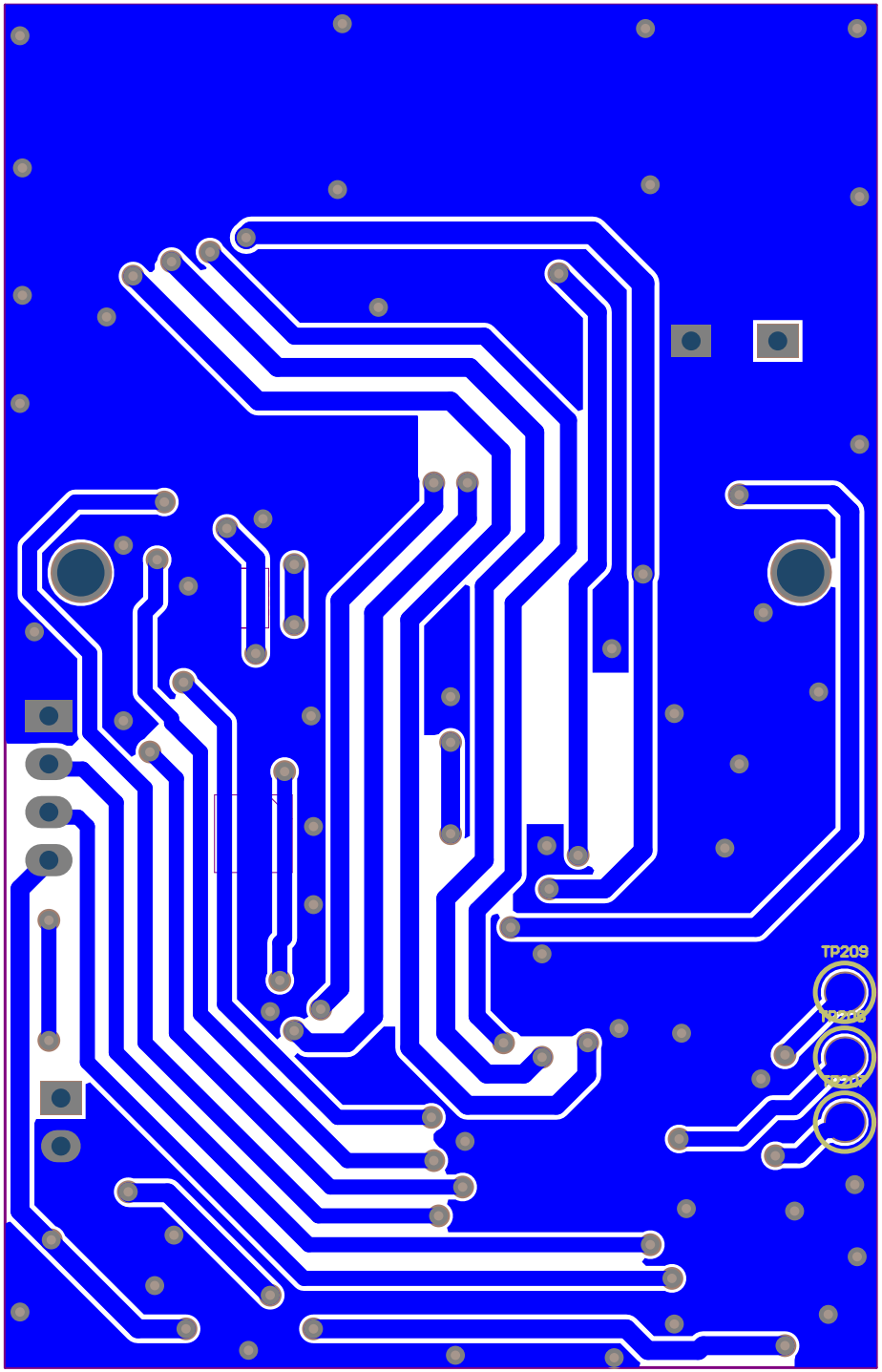
TP209