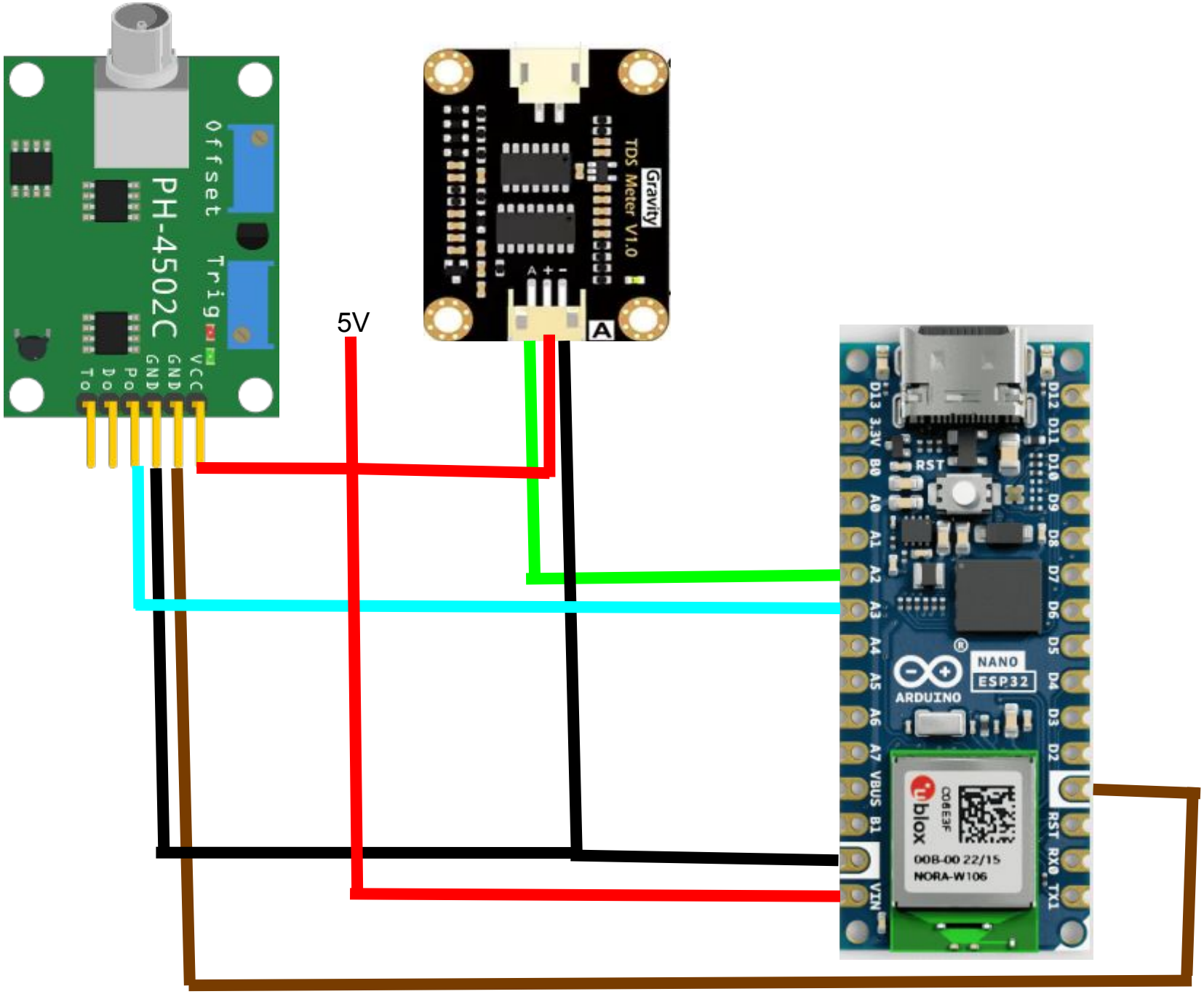
PH-4502C
Offset
Trig
VCC
GND
GND
Po
Do
To
5V
Gravity
TDS Meter V1.0
A+-
A
RST
D13 3.3V B0 A0 A1 A2 A3 A4 A5 A6 A7 VBUS B1 VIN
D12 D11 D10 D9 D8 D7 D6 D5 D4 D3 D2 RST RX0 TX1
ARDUINO
NANO
ESP32
blox
00B-00 22/15
NORA-W106

Wire Setup:

PH-4502c Sensor:

VCC ------ 5V

GND ------ Arduino GND (Next to Vin)

2nd GND ------ 2nd Arduino GND (Next to D2)

Po ------ A3

TDS Sensor:

+ ------ 5V

- ------- Arduino GND (Next to Vin)

A ------ A2

Arduino Nano Esp32:

Vin ------ 5V

GND ------ GND

- Must connect ground pins of sensors to the same row as Arduino to have common reference point.