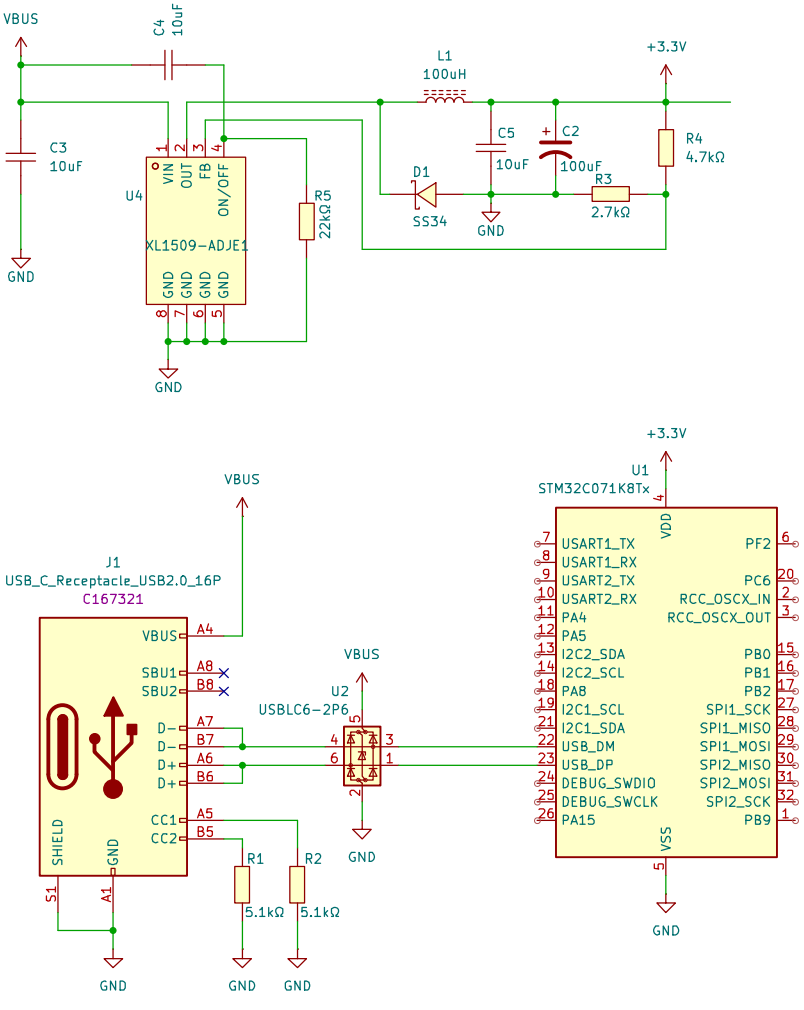
VBUS
C4
10uF
C3
10uF
GND
U4
VIN
OUT
FB
ON/OFF
XL1509-ADJE1
GND
GND
GND
GND
R5
22kΩ
L1
100uH
C5
10uF
C2
100uF
D1
SS34
R3
2.7kΩ
+3.3V
R4
4.7kΩ
J1
USB_C_Receptacle_USB2.0_16P
C167321
VBUS
SBU1
SBU2
D-
D-
D+
D+
CC1
CC2
SHIELD
GND
S1
A1
U2
USBLC6-2P6
R1
5.1kΩ
R2
5.1kΩ
U1
STM32C071K8Tx
VDD
VSS
USART1_TX
USART1_RX
USART2_TX
USART2_RX
PA4
PA5
I2C2_SDA
I2C2_SCL
PA8
I2C1_SCL
I2C1_SDA
USB_DM
USB_DP
DEBUG_SWDIO
DEBUG_SWCLK
PA15
PF2
PC6
RCC_OSCX_IN
RCC_OSCX_OUT
PB0
PB1
PB2
SPI1_SCK
SPI1_MISO
SPI1_MOSI
SPI2_MISO
SPI2_MOSI
SPI2_SCK
PB9