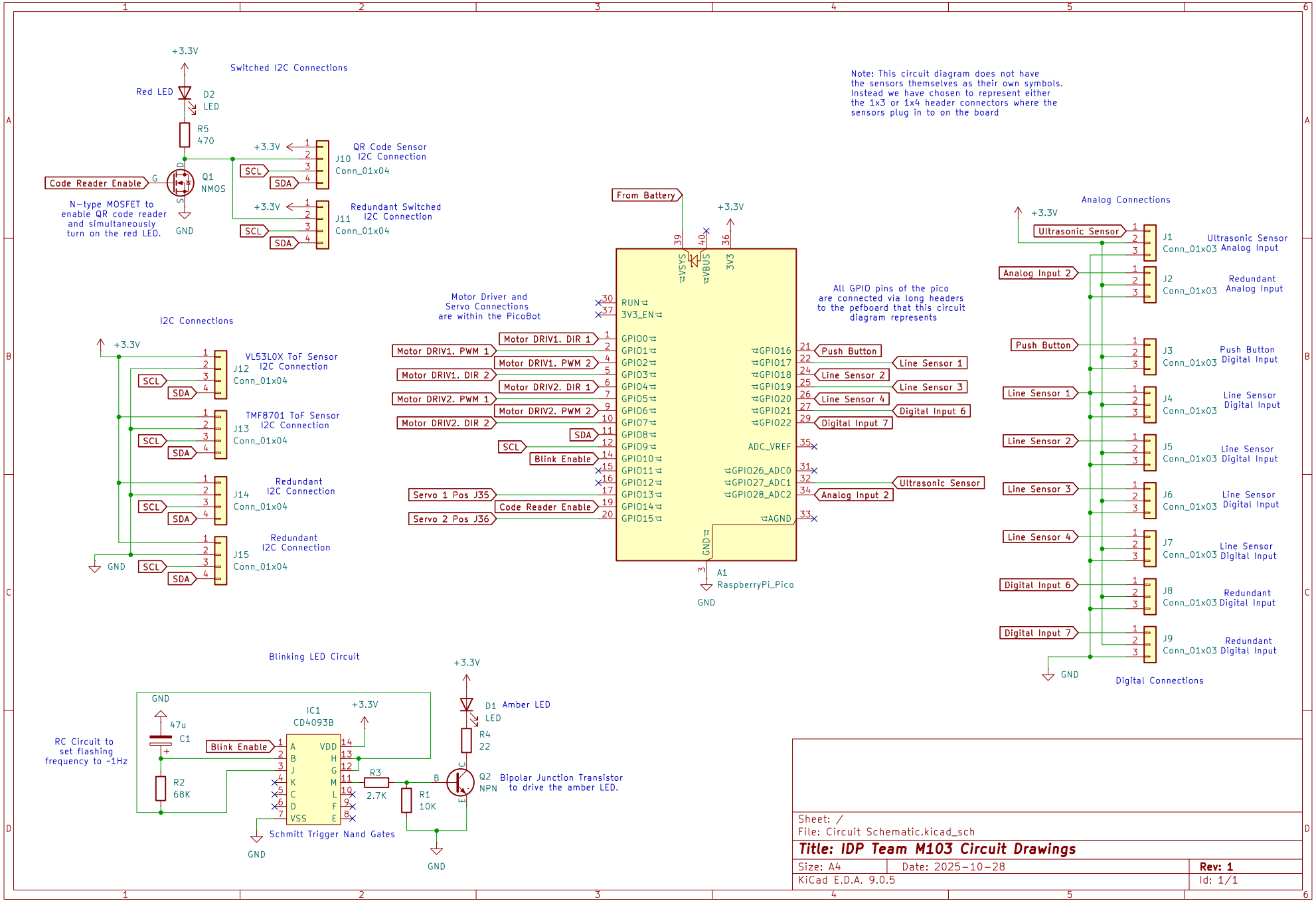

Sheet: /
File: Circuit Schematic.kicad_sch

Title: IDP Team M103 Circuit Drawings

Size: A4	Date: 2025-10-28	**Rev: 1**
KiCad E.D.A. 9.0.5		Id: 1/1