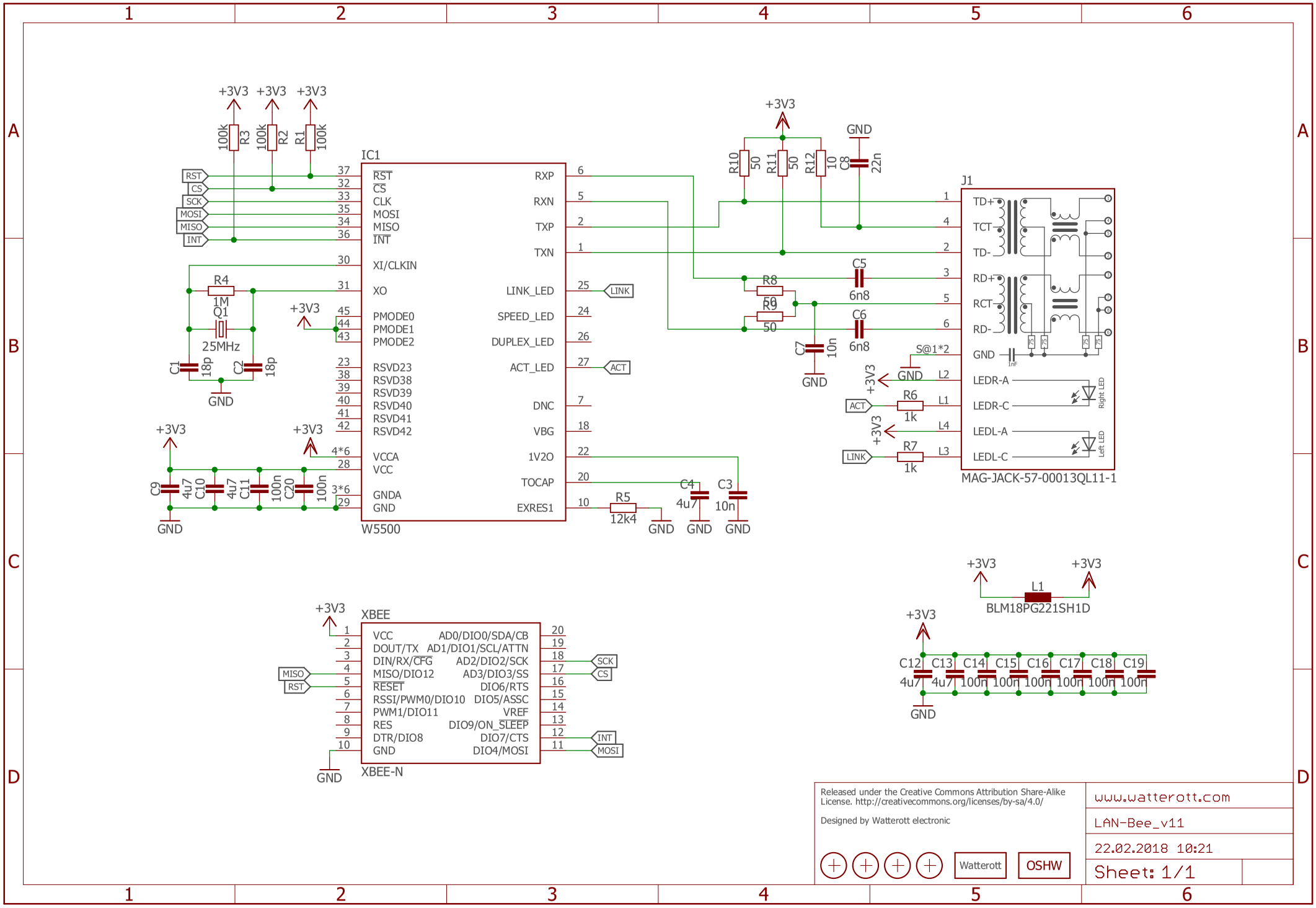

Released under the Creative Commons Attribution Share-Alike License. http://creativecommons.org/licenses/by-sa/4.0/

Designed by Watterott electronic

Watterott OSHW

www.watterott.com

LAN-Bee_v11

22.02.2018 10:21

Sheet: 1/1

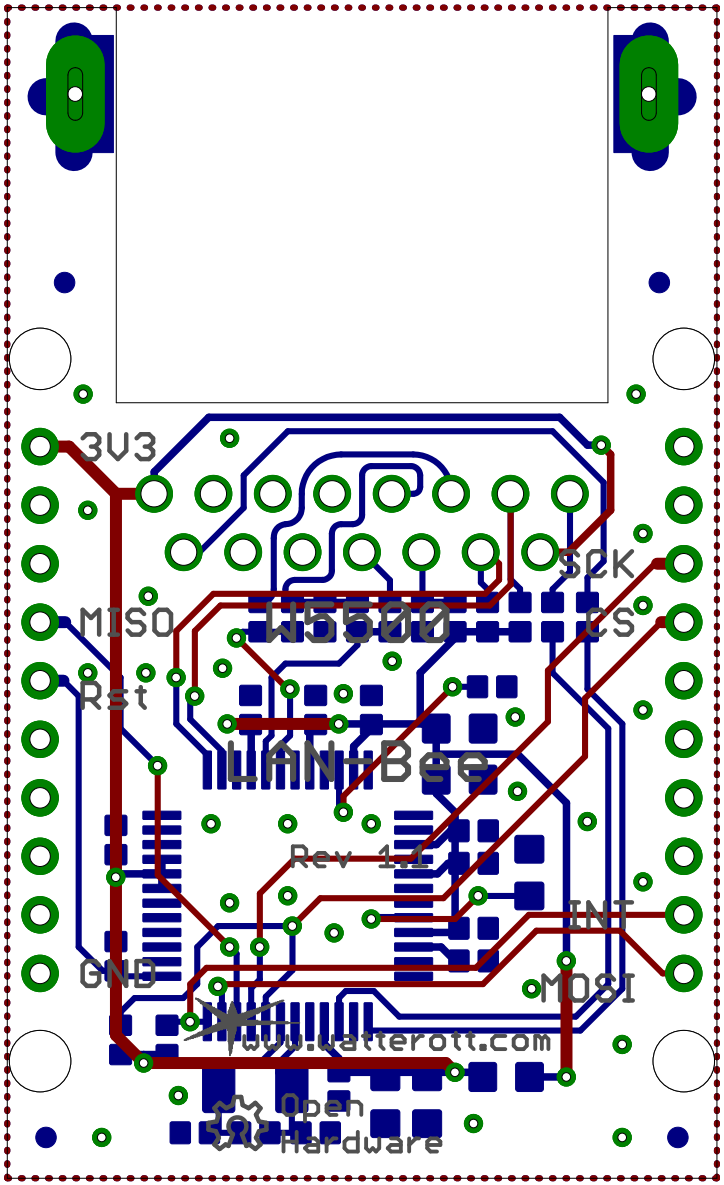
3V3
MISO
Rst
GND
SCK
CS
INT
MOSI
W5500
LAN-Bee
Rev 1.1
www.watterott.com
Open
Hardware