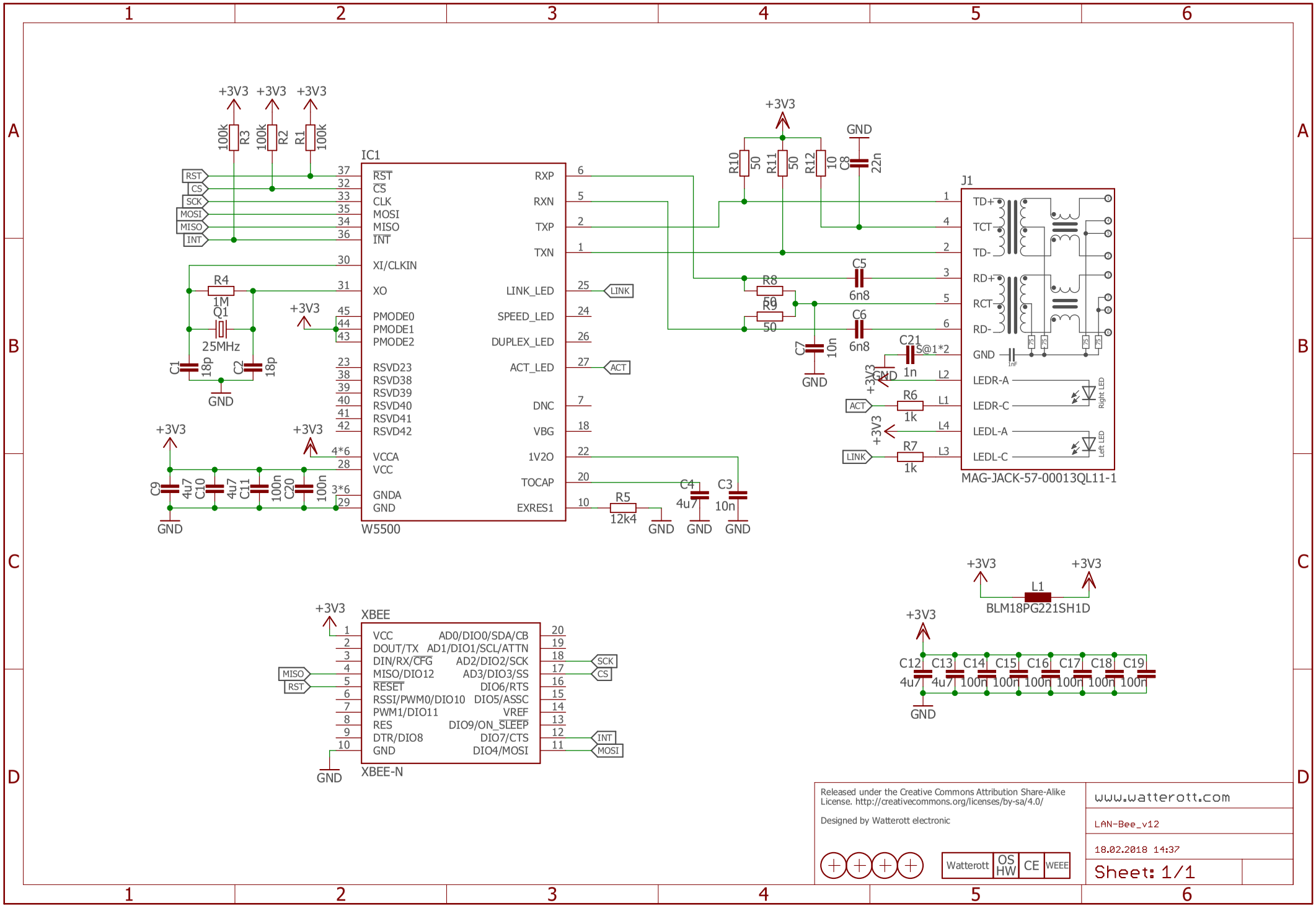
IC1
W5500
J1
MAG-JACK-57-00013QL11-1
XBEE
XBEE-N
BLM18PG221SH1D
+3V3
GND
RST
CS
SCK
MOSI
MISO
INT
LINK
ACT
RXP
RXN
TXP
TXN
XI/CLKIN
XO
PMODE0
PMODE1
PMODE2
RSVD23
RSVD38
RSVD39
RSVD40
RSVD41
RSVD42
VCCA
VCC
GNDA
LINK_LED
SPEED_LED
DUPLEX_LED
ACT_LED
DNC
VBG
1V2O
TOCAP
EXRES1
TD+
TCT
TD-
RD+
RCT
RD-
LEDR-A
LEDR-C
LEDL-A
LEDL-C
Right LED
Left LED
VCC
DOUT/TX
DIN/RX/CFG
MISO/DIO12
RESET
RSSI/PWM0/DIO10
PWM1/DIO11
RES
DTR/DIO8
AD0/DIO0/SDA/CB
AD1/DIO1/SCL/ATTN
AD2/DIO2/SCK
AD3/DIO3/SS
DIO6/RTS
DIO5/ASSC
VREF
DIO9/ON_SLEEP
DIO7/CTS
DIO4/MOSI
R1 100k
R2 100k
R3 100k
R4 1M
Q1 25MHz
C1 18p
C2 18p
R5 12k4
C3 10n
C4 4u7
C5 6n8
C6 6n8
C7 10n
C8 22n
C9 4u7
C10 4u7
C11 100n
C20 100n
C21 1n
R6 1k
R7 1k
R8 50
R9 50
R10 50
R11 50
R12 10
L1
C12 4u7
C13 4u7
C14 100n
C15 100n
C16 100n
C17 100n
C18 100n
C19 100n
Released under the Creative Commons Attribution Share-Alike License. http://creativecommons.org/licenses/by-sa/4.0/
Designed by Watterott electronic
Watterott
OS HW
CE
WEEE
www.watterott.com
LAN-Bee_v12
18.02.2018 14:37
Sheet: 1/1

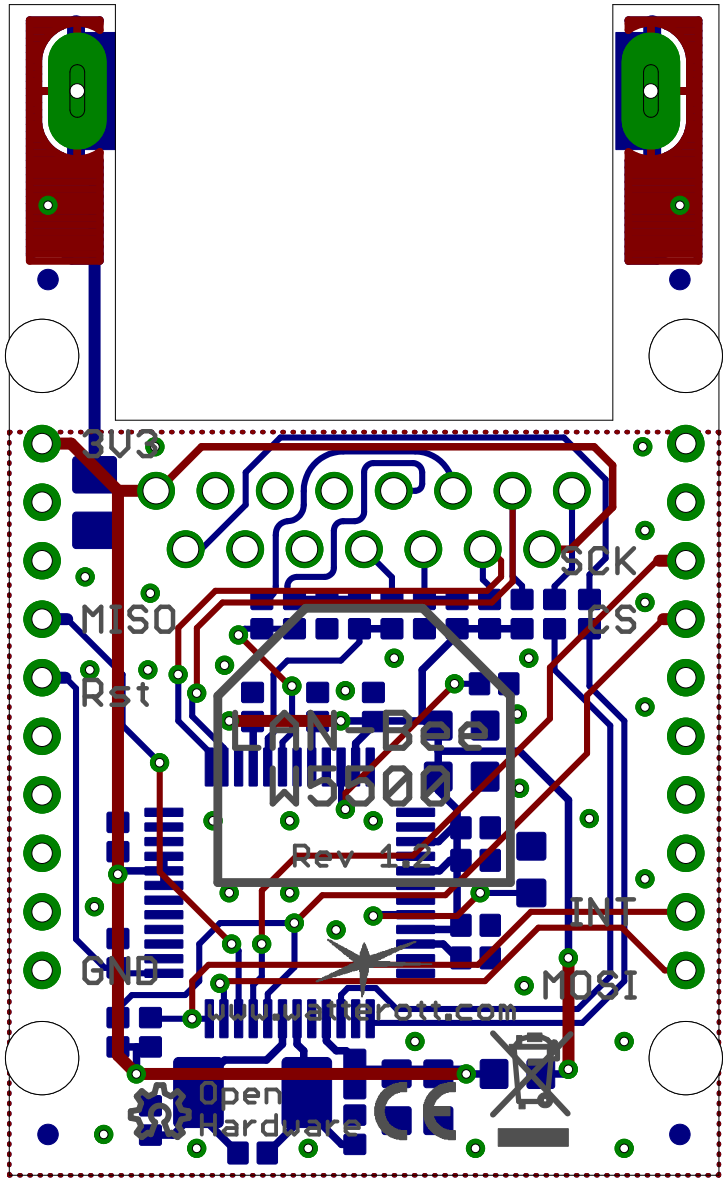
3V3
SCK
MISO
CS
Rst
LAN-Bee
W5500
Rev 1.2
INT
GND
MOSI
www.wanderott.com
Open
Hardware