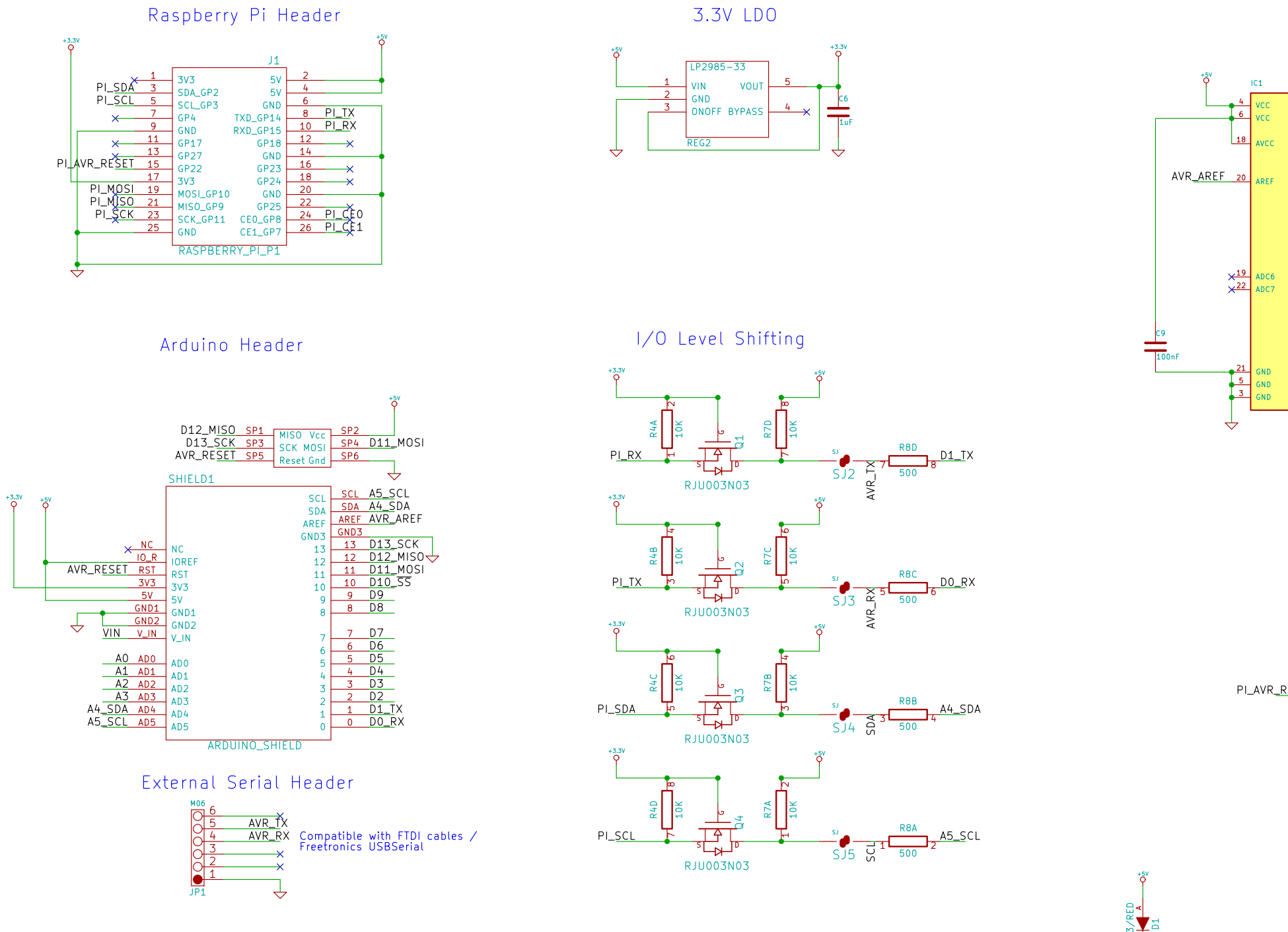
Raspberry Pi Header
J1
RASPBERRY_PI_P1
PI_SDA
PI_SCL
PI_AVR_RESET
PI_MOSI
PI_MISO
PI_SCK
PI_TX
PI_RX
PI_CE0
PI_CE1
3V3
SDA_GP2
SCL_GP3
GP4
GND
GP17
GP27
GP22
3V3
MOSI_GP10
MISO_GP9
SCK_GP11
GND
5V
5V
GND
TXD_GP14
RXD_GP15
GP18
GND
GP23
GP24
GND
GP25
CE0_GP8
CE1_GP7
3.3V LDO
LP2985-33
VIN
GND
ONOFF
VOUT
BYPASS
REG2
C6
1uF
IC1
VCC
VCC
AVCC
AVR_AREF
AREF
ADC6
ADC7
GND
GND
GND
C9
100nF
Arduino Header
SHIELD1
ARDUINO_SHIELD
D12_MISO
D13_SCK
AVR_RESET
MISO Vcc
SCK MOSI
Reset Gnd
D11_MOSI
A5_SCL
A4_SDA
AVR_AREF
D13_SCK
D12_MISO
D11_MOSI
D10_SS
D9
D8
D7
D6
D5
D4
D3
D2
D1_TX
D0_RX
NC
IO_R
AVR_RESET
RST
3V3
5V
GND1
GND2
VIN
V_IN
A0
A1
A2
A3
A4_SDA
A5_SCL
AD0
AD1
AD2
AD3
AD4
AD5
External Serial Header
M06
JP1
AVR_TX
AVR_RX
Compatible with FTDI cables /
Freetronics USBSerial
I/O Level Shifting
PI_RX
PI_TX
PI_SDA
PI_SCL
R4A
R4B
R4C
R4D
R7D
R7C
R7B
R7A
10K
Q1
Q2
Q3
Q4
RJU003N03
SJ2
SJ3
SJ4
SJ5
AVR_TX
AVR_RX
SDA
SCL
R8D
R8C
R8B
R8A
500
D1_TX
D0_RX
A4_SDA
A5_SCL
PI_AVR_R
D1