Raspberry Pi Header

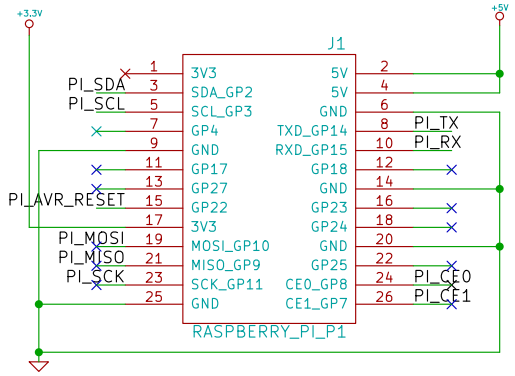

3.3V LDO

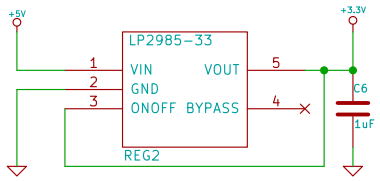

MCU

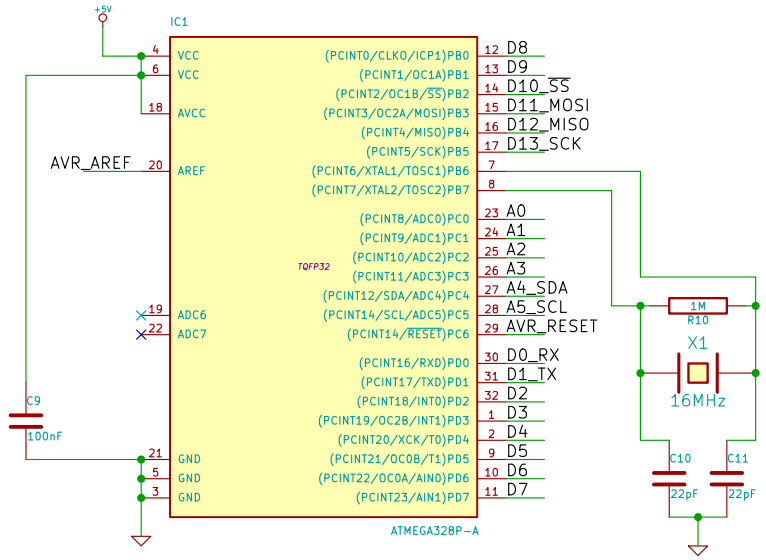

Arduino Header

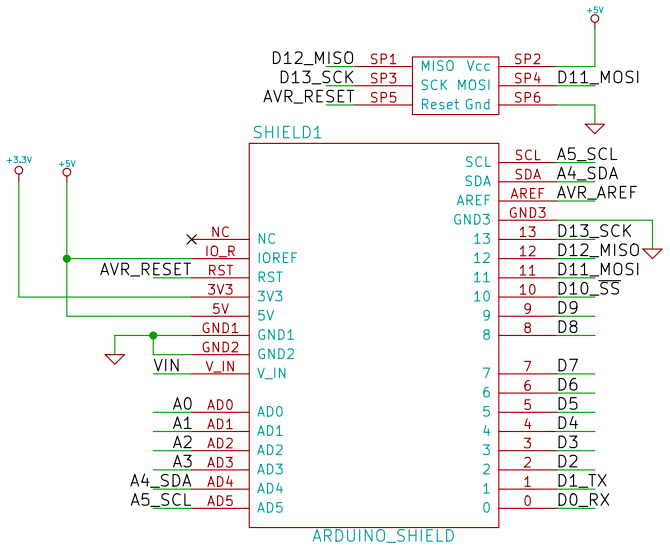

I/O Level Shifting

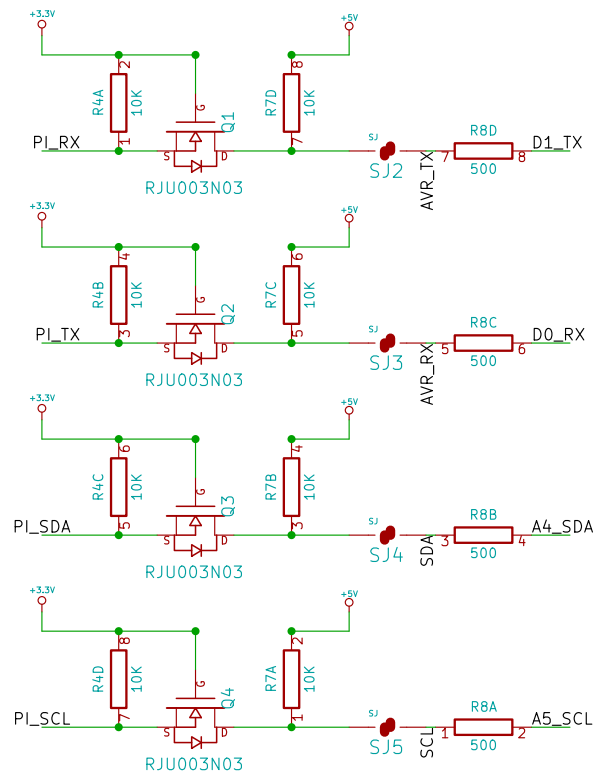

Reset Circuit

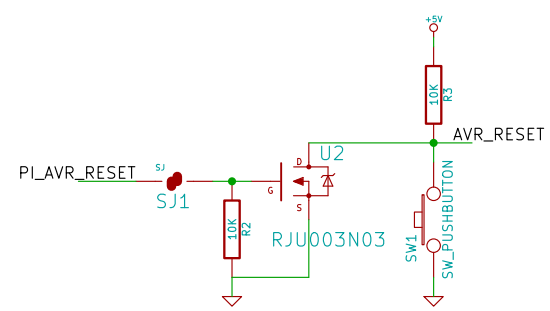

External Serial Header

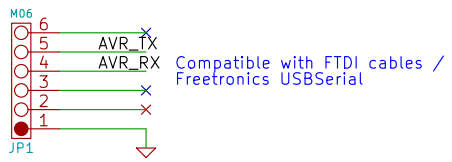

LEDs

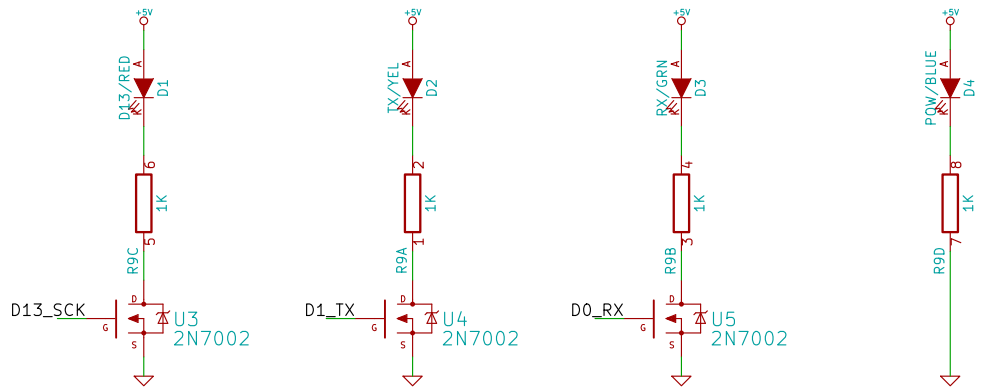
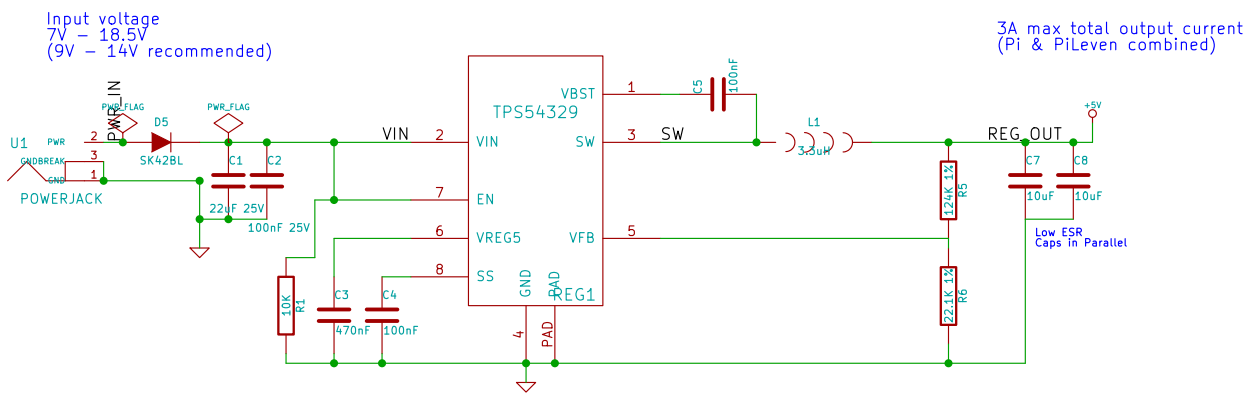
Power Supply