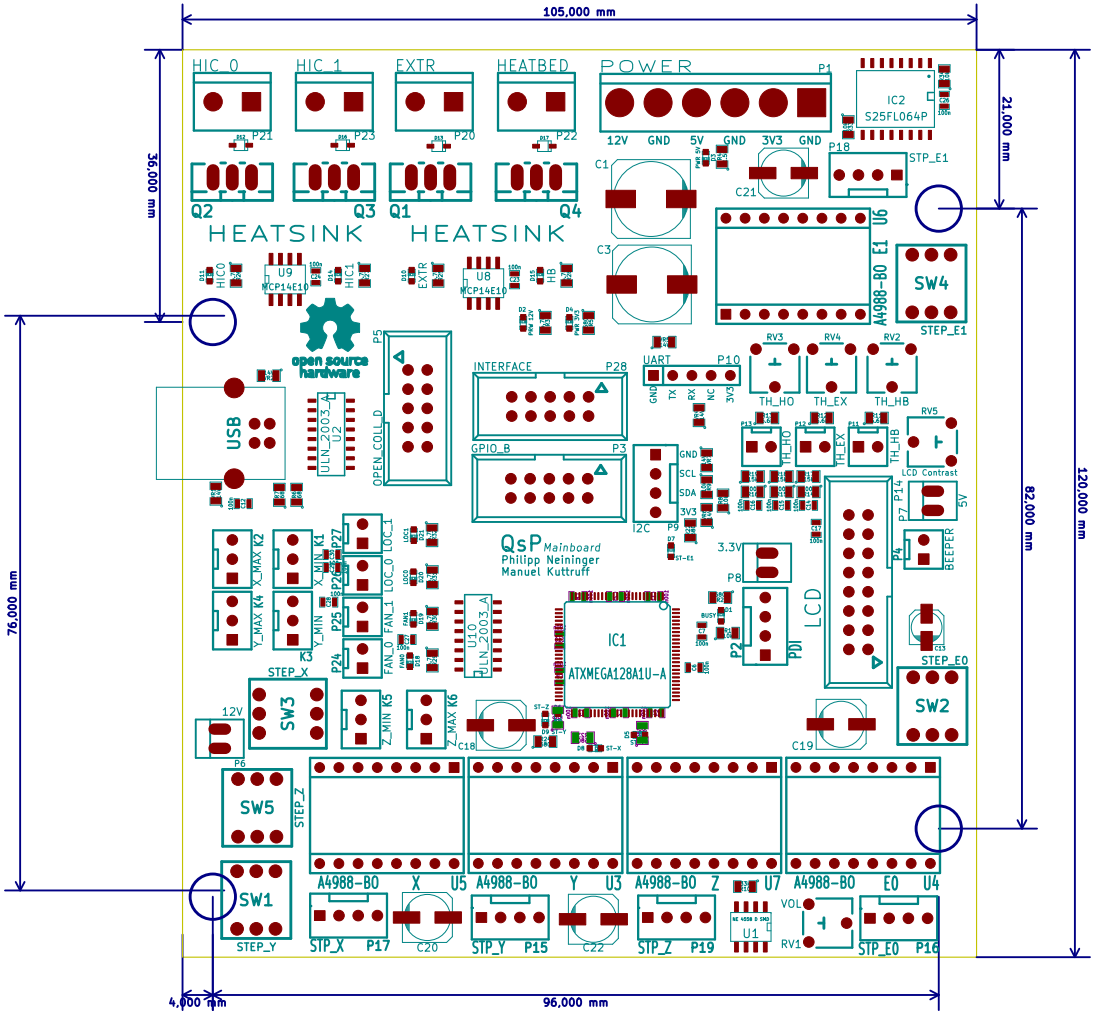

Sheet:
File: mainboard.kicad_pcb

Title:

Size: A4	Date:	Rev:
KiCad E.D.A. kicad (2014-05-13 BZR 4864)-product		Id: 1/1