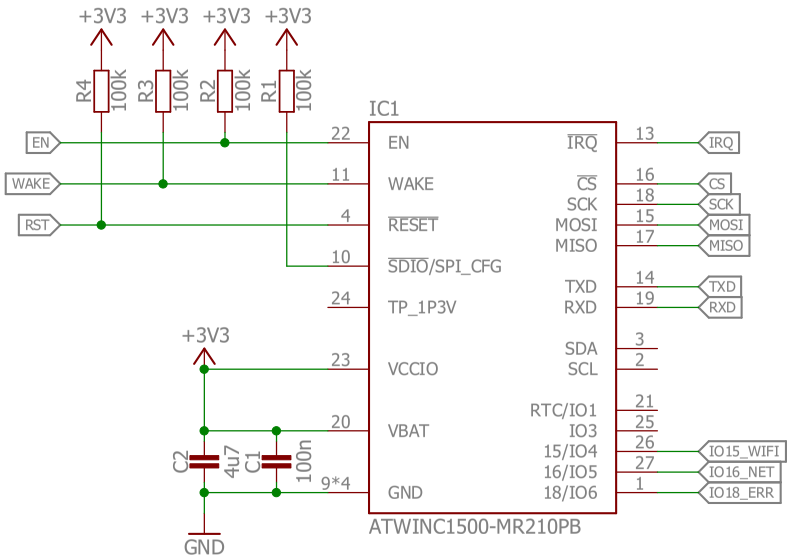

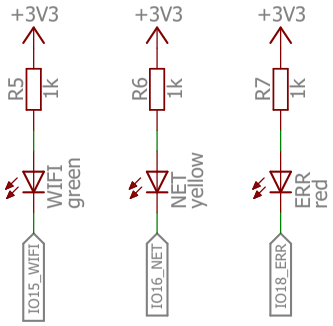

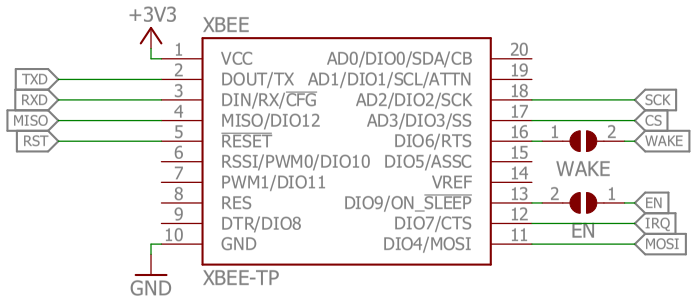

Released under the Creative Commons Attribution Share-Alike License. http://creativecommons.org/licenses/by-sa/4.0/

Designed by Watterott electronic

Watterott

OS HW

www.watterott.com

WiFi-Bee_v10

16.02.2018 19:47

Sheet: 1/1

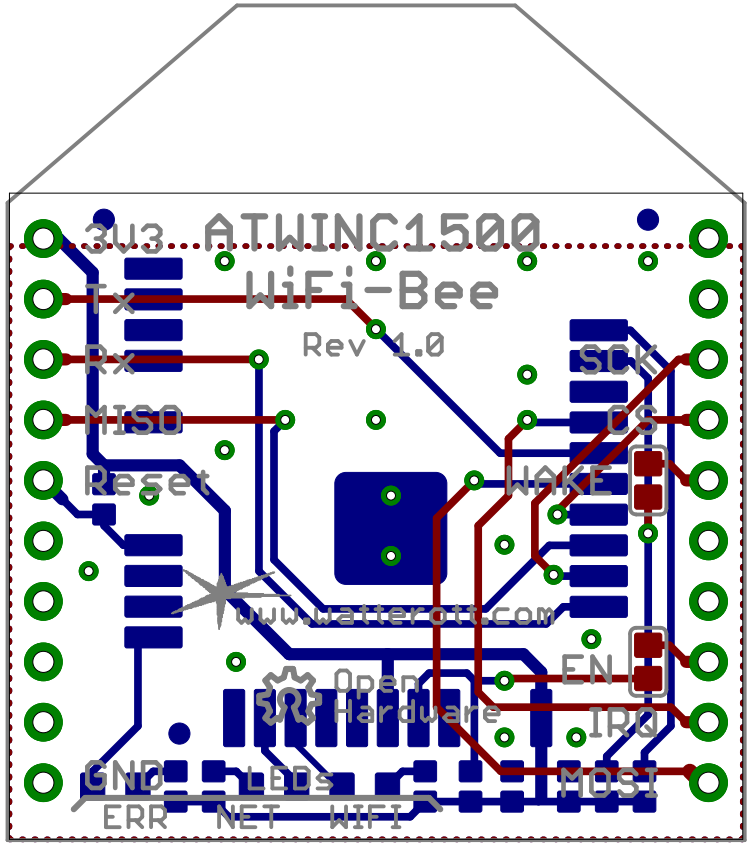
3v3
ATWINC1500
WiFi-Bee
Rev 1.0
Tx
Rx
MISO
Reset
SCK
CS
WAKE
EN
IRQ
MOSI
GND
LEDs
ERR
NET
WIFI
www.watterott.com
Open
Hardware