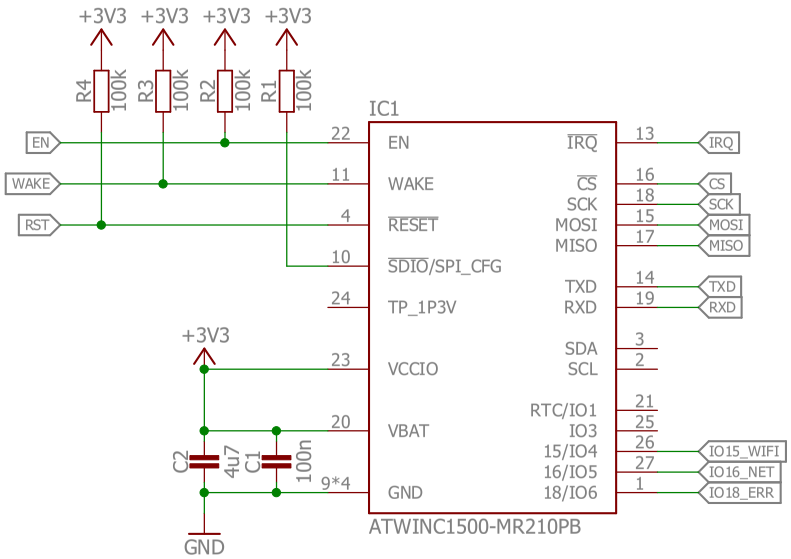

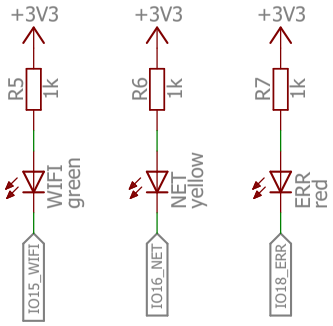

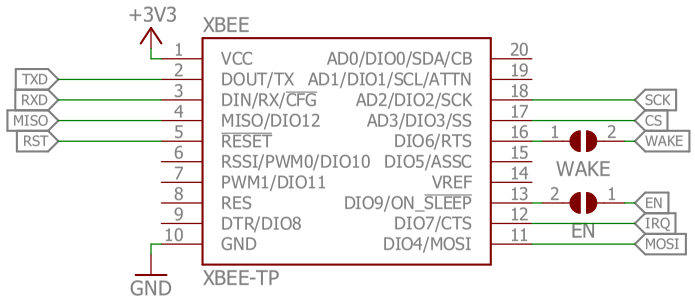

Released under the Creative Commons Attribution Share-Alike License. http://creativecommons.org/licenses/by-sa/4.0/

Designed by Watterott electronic

Watterott | OS HW | CE | WEEE

www.watterott.com

WiFi-Bee_v11

16.02.2018 19:47

Sheet: 1/1

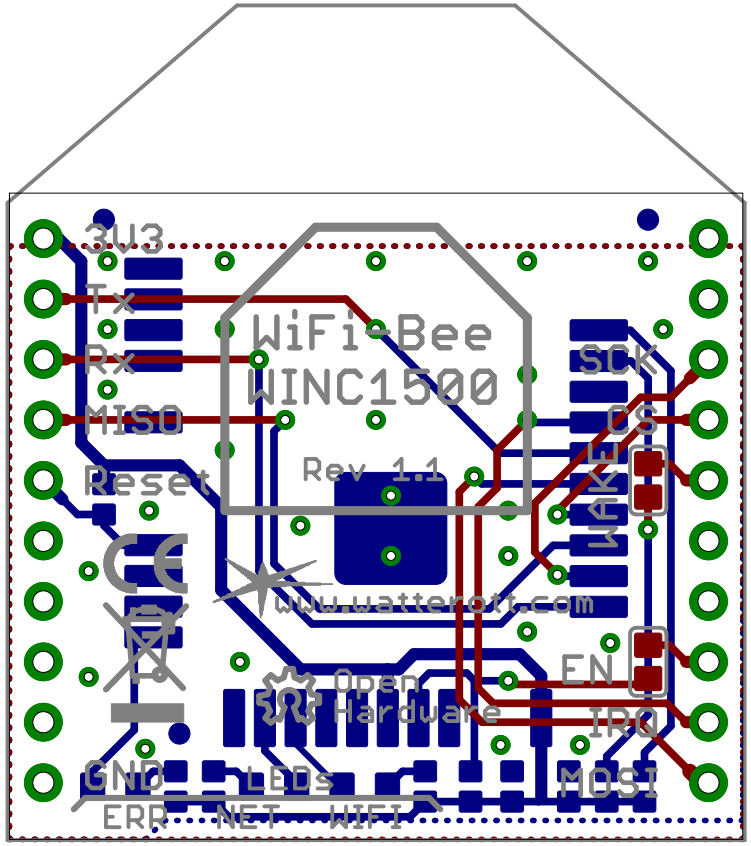
3V3
Tx
Rx
MISO
Reset
GND
WiFi-Bee
WINC1500
Rev 1.1
www.watterott.com
Open
Hardware
LEDs
ERR
NET
WIFI
SCK
CS
WAKE
EN
IRQ
MOSI