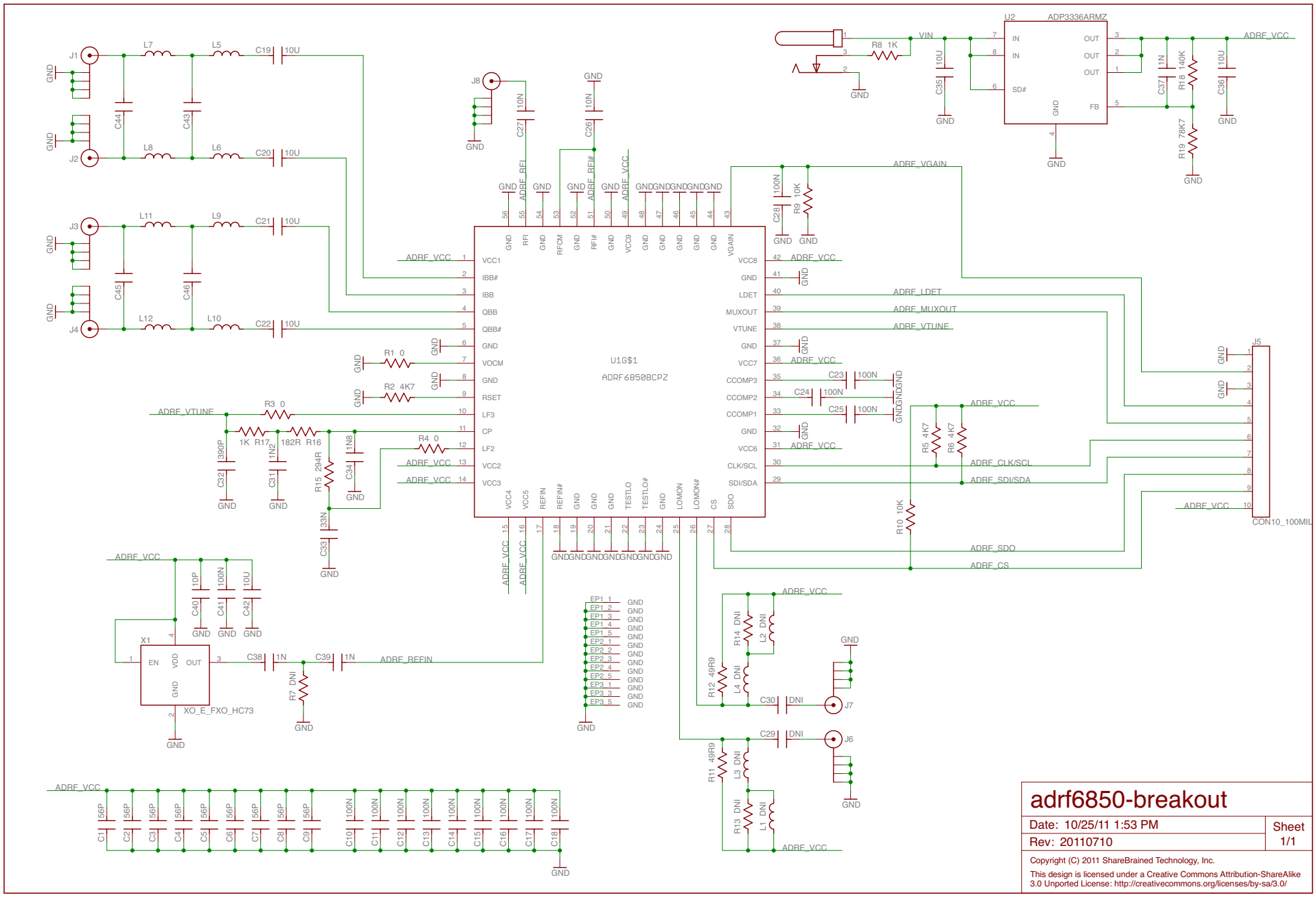

adrf6850-breakout

Date: 10/25/11 1:53 PM	Sheet 1/1
Rev: 20110710	

Copyright (C) 2011 ShareBrained Technology, Inc.

This design is licensed under a Creative Commons Attribution-ShareAlike 3.0 Unported License: http://creativecommons.org/licenses/by-sa/3.0/