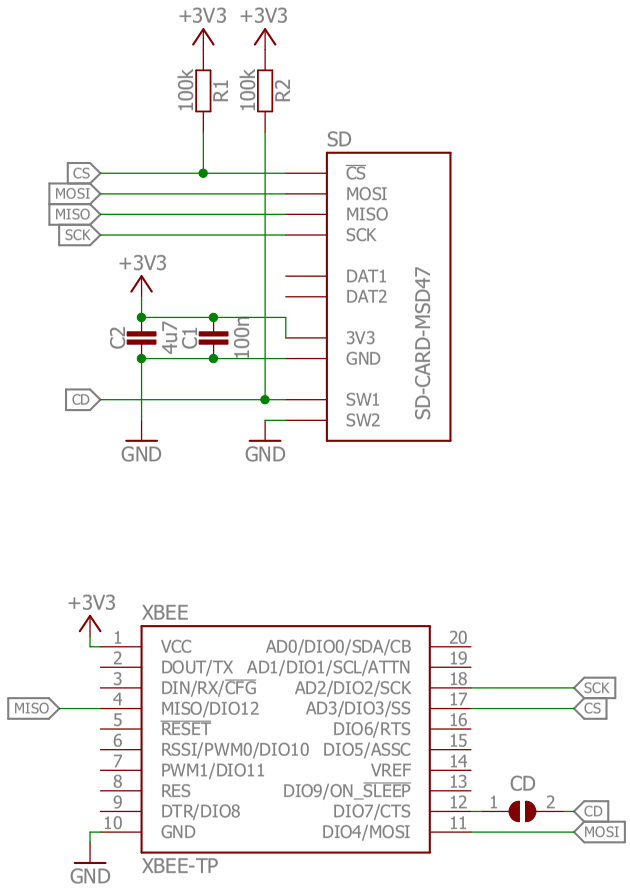

Released under the Creative Commons Attribution Share-Alike License. http://creativecommons.org/licenses/by-sa/4.0/

Designed by Watterott electronic

Watterott

OS HW

www.watterott.com

mSD-Bee_v10

16.02.2018 19:47

Sheet: 1/1

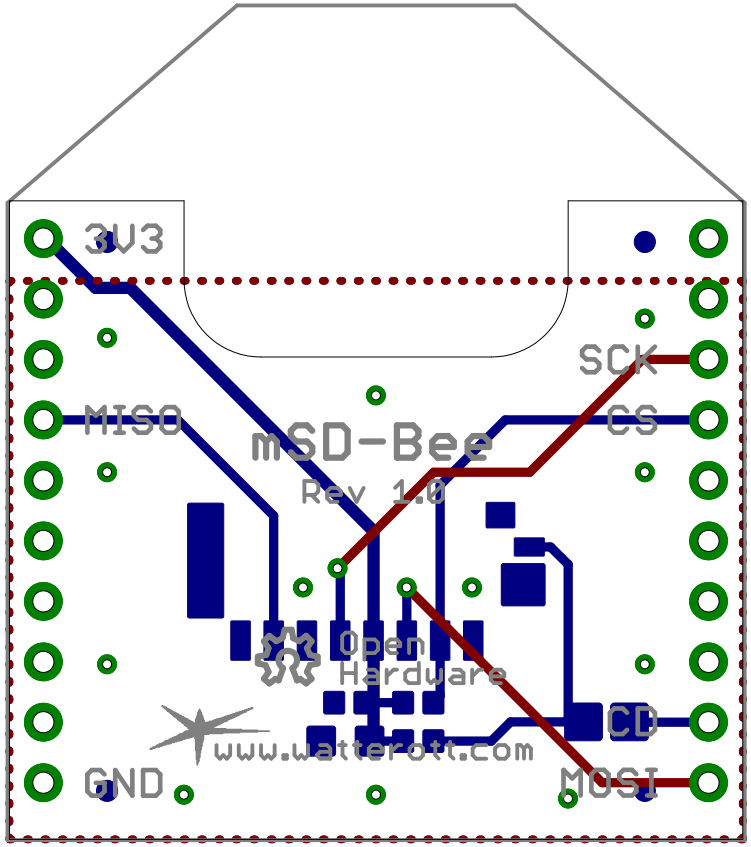
3V3
SCK
MISO
CS
mSD-Bee
Rev 1.0
Open
Hardware
CD
www.watterott.com
GND
MOSI