I'll Re-draw these don't worry

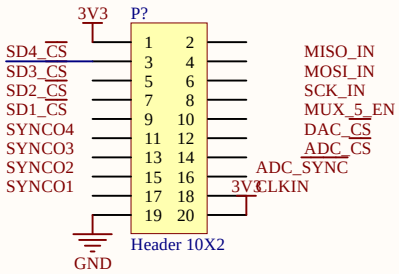


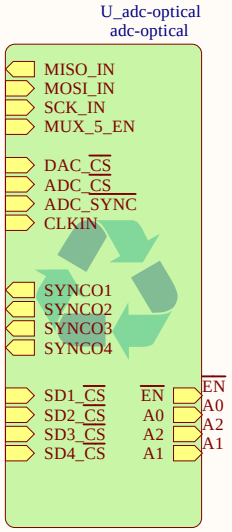


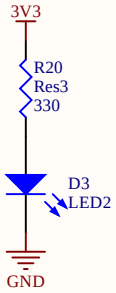


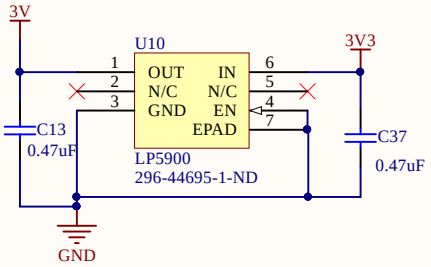


| | | |
|---|---|---|
| Title | PAY Optical Top Level | |
| Size: A4 | Number: PAY-1-02-020 | Revision: 2.1 |
| Date: 2018-06-17 | Sheet 1 of 7 | |
| File: C:\Users\..\pay-optical-toplevel.SchDoc | Drawn By: Dylan Vogel | |

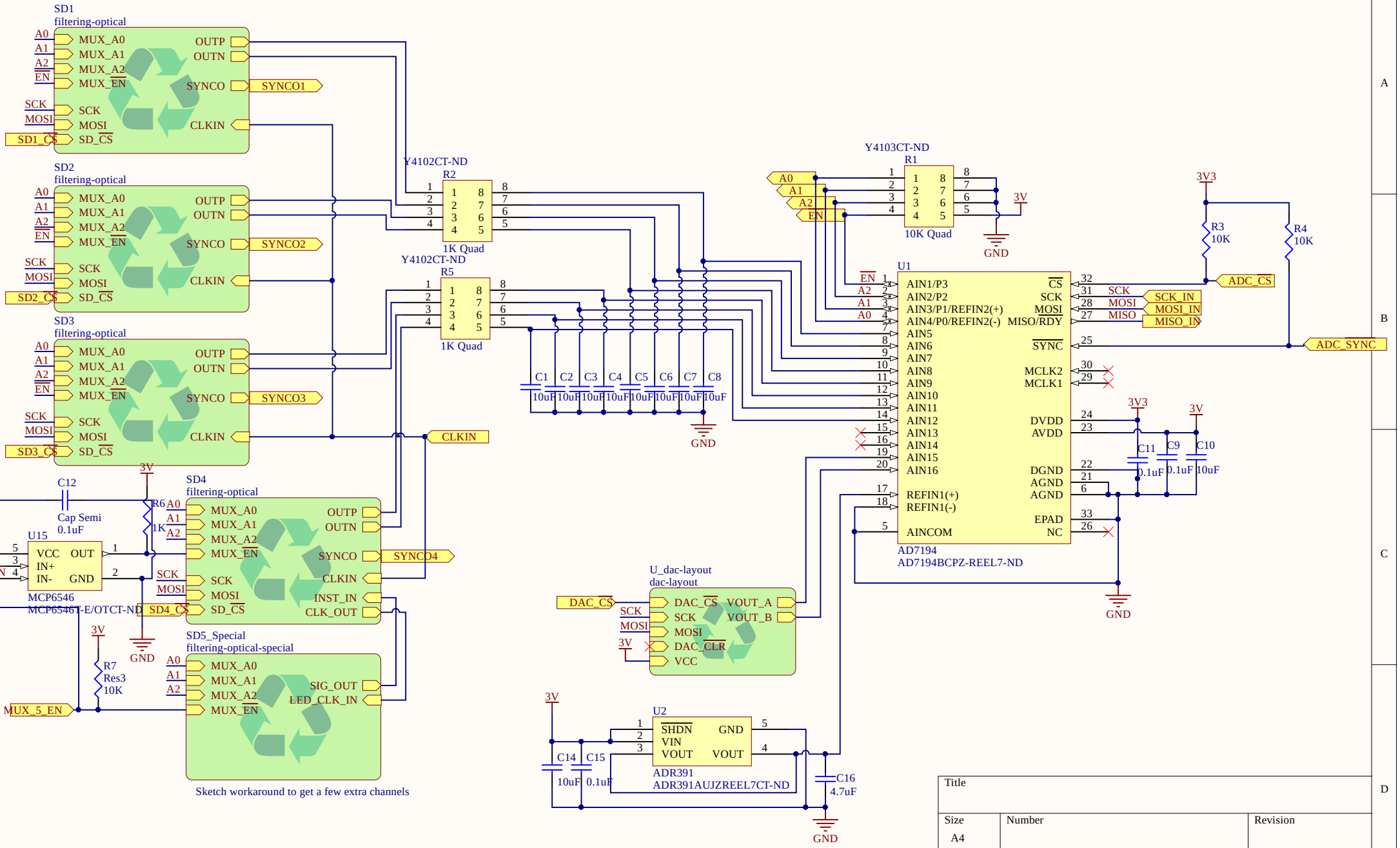
SD1
filtering-optical
A0
A1
A2
EN
SCK
MOSI
SD1_CS
MUX_A0
MUX_A1
MUX_A2
MUX_EN
SCK
MOSI
SD_CS
OUTP
OUTN
SYNCO
CLKIN
SYNCO1
SD2
filtering-optical
SD2_CS
SYNCO2
SD3
filtering-optical
SD3_CS
SYNCO3
SD4
filtering-optical
SD4_CS
SYNCO4
INST_IN
CLK_OUT
SD5_Special
filtering-optical-special
MUX_5_EN
SIG_OUT
LED_CLK_IN
Sketch workaround to get a few extra channels
Y4102CT-ND
R2
1K Quad
R5
Y4103CT-ND
R1
10K Quad
C1
C2
C3
C4
C5
C6
C7
C8
10uF
CLKIN
3V
GND
C12
Cap Semi
0.1uF
R6
1K
U15
VCC
IN+
IN-
OUT
GND
MCP6546
MCP6546T-E/OTCT-ND
R7
Res3
10K
U1
AIN1/P3
AIN2/P2
AIN3/P1/REFIN2(+)
AIN4/P0/REFIN2(-)
AIN5
AIN6
AIN7
AIN8
AIN9
AIN10
AIN11
AIN12
AIN13
AIN14
AIN15
AIN16
REFIN1(+)
REFIN1(-)
AINCOM
CS
SCK
MOSI
MISO/RDY
SYNC
MCLK2
MCLK1
DVDD
AVDD
DGND
AGND
AGND
EPAD
NC
AD7194
AD7194BCPZ-REEL7-ND
3V3
R3
10K
R4
10K
ADC_CS
SCK_IN
MOSI_IN
MISO_IN
ADC_SYNC
C11
C9
C10
0.1uF
U_dac-layout
dac-layout
DAC_CS
VOUT_A
VOUT_B
DAC_CLR
U2
SHDN
VIN
VOUT
ADR391
ADR391AUJZREEL7CT-ND
C14
C15
C16
4.7uF
Title
Size
A4
Number
Revision
Date:
2018-06-17
Sheet
of
File:
C:\Users\..\analog-to-digital.SchDoc
Drawn By:

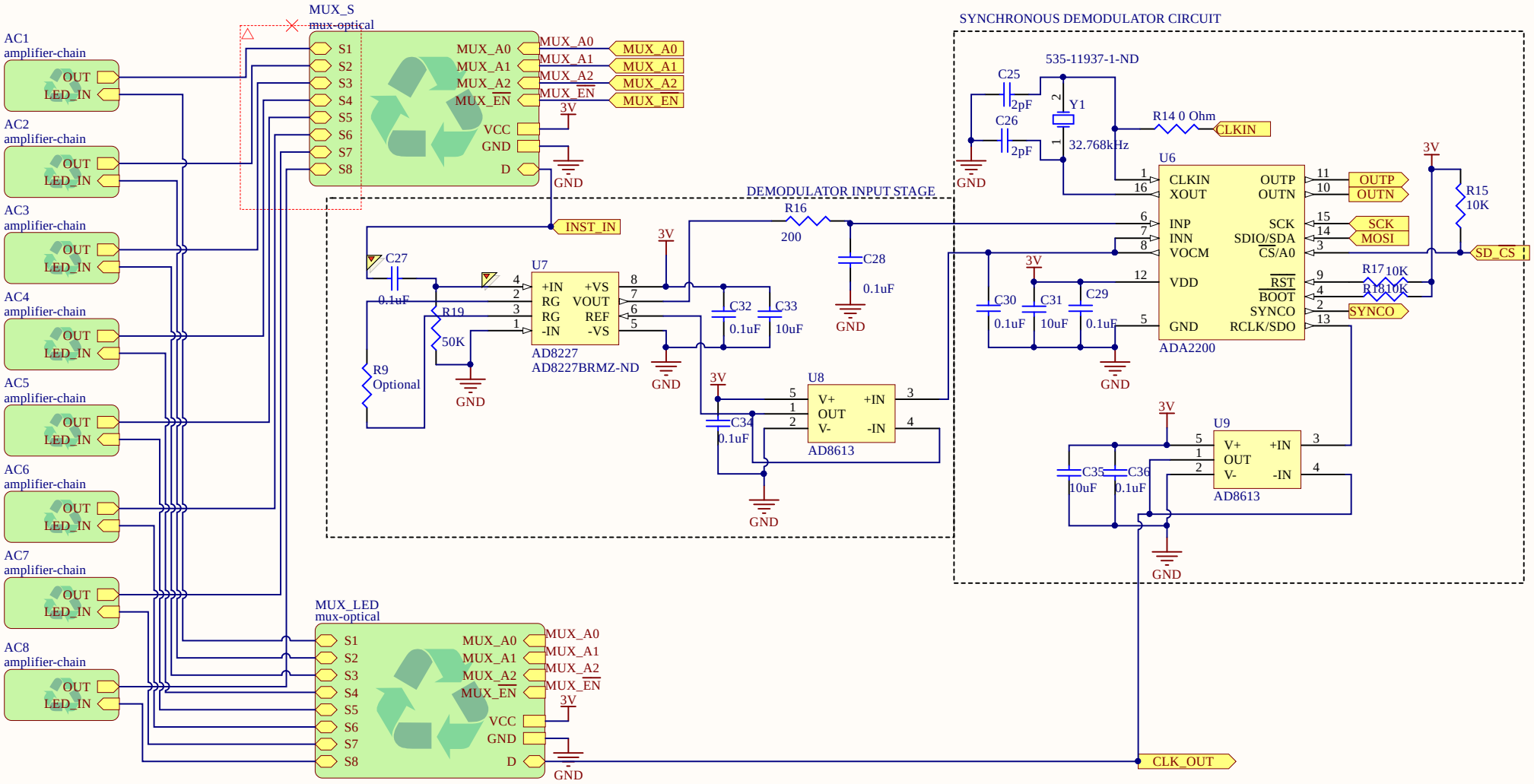


| | | |
|---|---|---|
| Title | | |
| Size A4 | Number | Revision |
| Date: 2018-06-17 | Sheet of | |
| File: C:\Users\..\synchronous-demodulator.SchDoc | Drawn By: | |

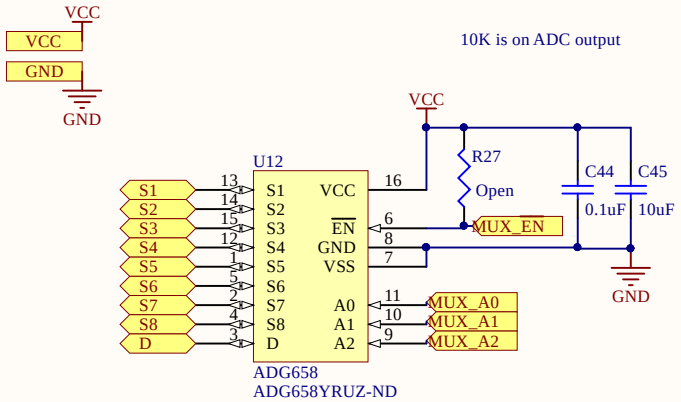


| | | | |
|---|---|---|---|
| Title | | | |
| Size A4 | Number | | Revision |
| Date: 2018-06-17 | | Sheet | of |
| File: C:\Users\..\channel-multiplexer.SchDoc | | Drawn By: | |

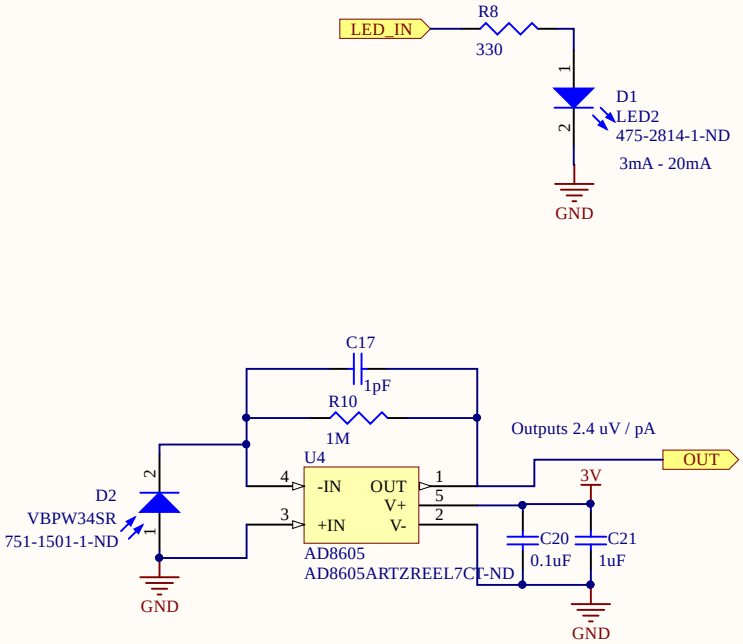


| | | |
|---|---|---|
| Title | | |
| Size: A4 | Number | Revision |
| Date: 2018-06-17 | Sheet of | |
| File: C:\Users\..\photodiode-amplifier.SchDoc | Drawn By: | |

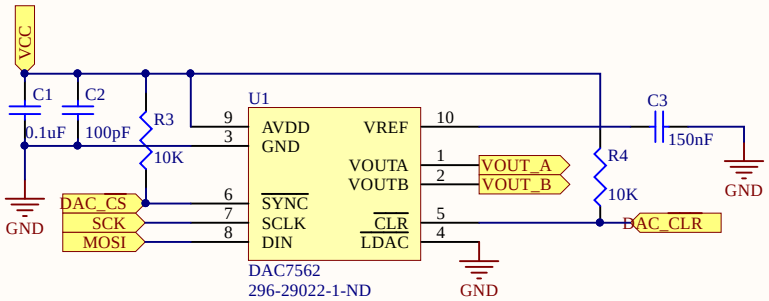


| | | |
|---|---|---|
| Title | | |
| Size: A4 | Number | Revision |
| Date: 2018-06-17 | Sheet of | |
| File: C:\Users\..\digital-to-analog.SchDoc | Drawn By: | |

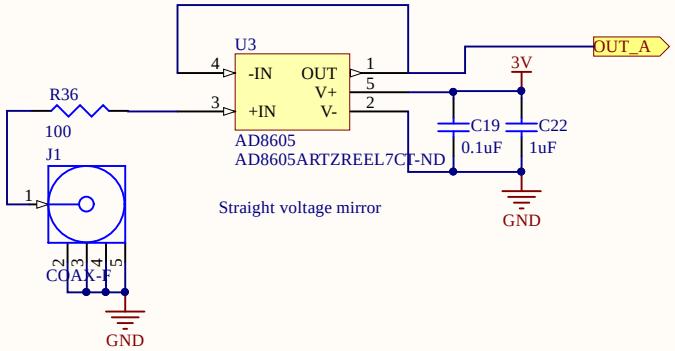


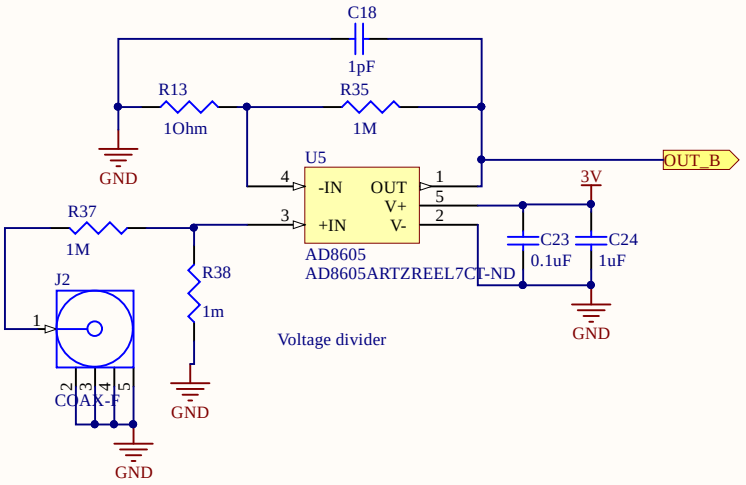


| | | |
|---|---|---|
| Title | | |
| Size: A4 | Number | Revision |
| Date: 2018-06-17 | | Sheet of |
| File: C:\Users\..\sma-amplifier.SchDoc | | Drawn By: |

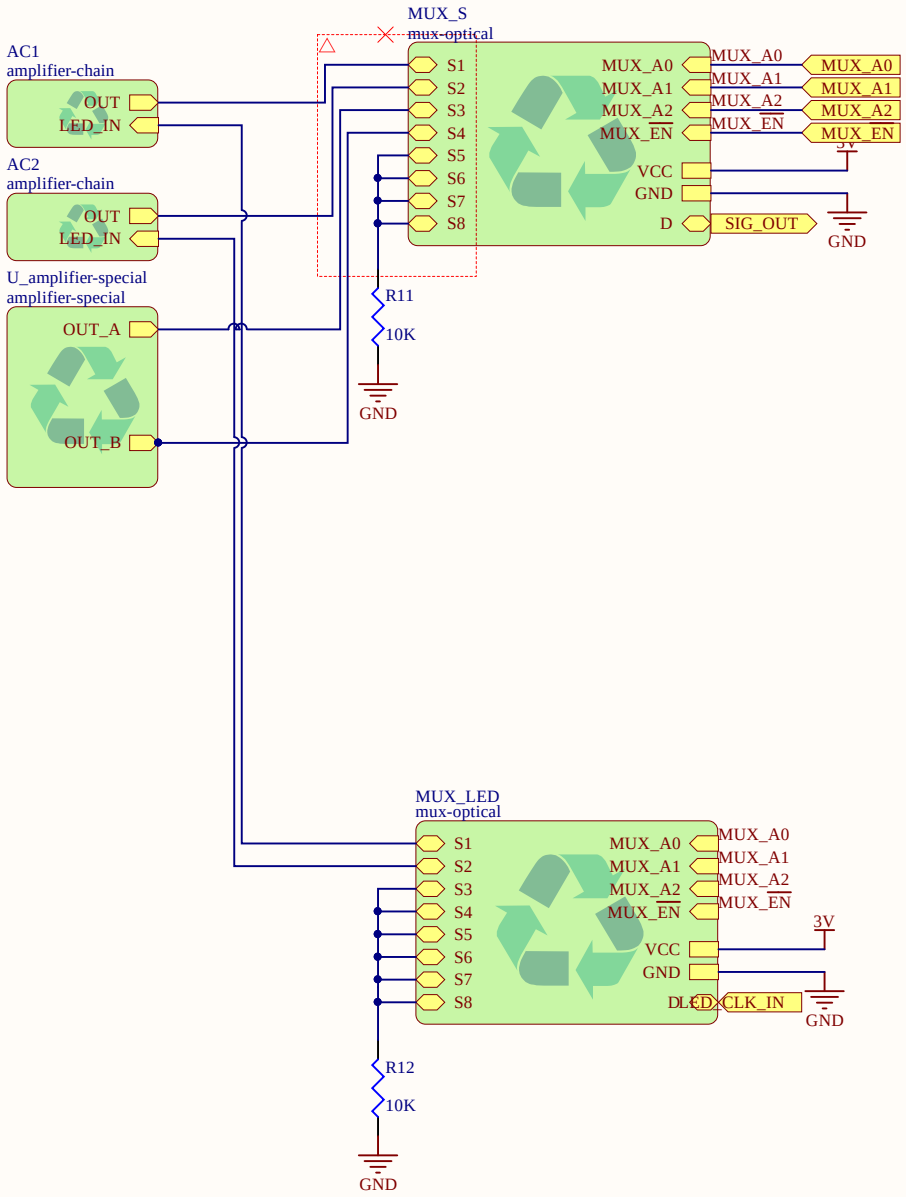


| | | |
|---|---|---|
| Title | | |
| Size: A4 | Number | Revision |
| Date: 2018-06-17 | | Sheet of |
| File: C:\Users\..\synchronous-demodulator-speed.SchDoc | | Drawn By: |

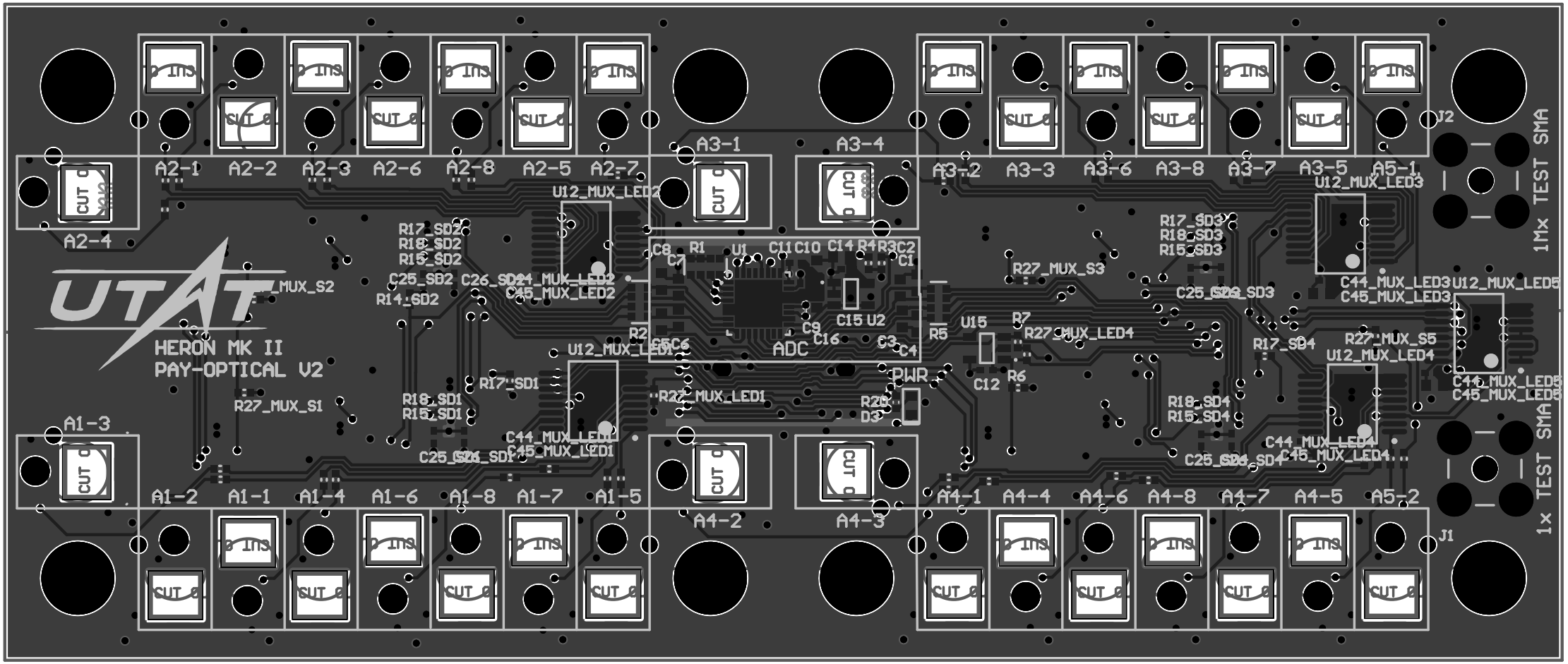

HERON MK II
PAY-OPTICAL V2
A2-1
A2-2
A2-3
A2-6
A2-8
A2-5
A2-7
A2-4
A3-1
A3-4
A3-2
A3-3
A3-6
A3-8
A3-7
A3-5
A5-1
A1-3
A1-2
A1-1
A1-4
A1-6
A1-8
A1-7
A1-5
A4-2
A4-3
A4-1
A4-4
A4-6
A4-8
A4-7
A4-5
A5-2
J2
J1
1Mx TEST SMA
1x TEST SMA
U12_MUX_LED2
U12_MUX_LED3
U12_MUX_LED5
U12_MUX_LED4
U12_MUX_LED1
R27_MUX_S1
R27_MUX_S2
R27_MUX_S3
R27_MUX_S5
R27_MUX_LED1
R27_MUX_LED4
C44_MUX_LED2
C45_MUX_LED2
C44_MUX_LED1
C45_MUX_LED1
C44_MUX_LED3
C45_MUX_LED3
C44_MUX_LED4
C45_MUX_LED4
C44_MUX_LED5
C45_MUX_LED5
R17_SD1
R18_SD1
R15_SD1
R17_SD2
R18_SD2
R15_SD2
R14_SD2
R17_SD3
R18_SD3
R15_SD3
R17_SD4
R18_SD4
R15_SD4
ADC
PWR
U1
U2
U15
C15
C16
C12
R1
R2
R3
R4
R5
R6
R7

Board S