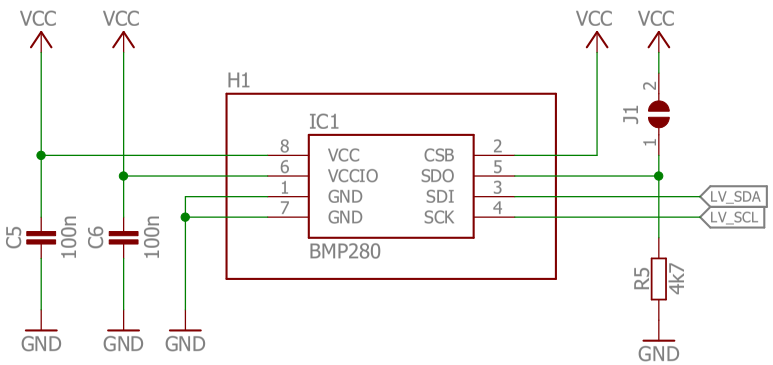

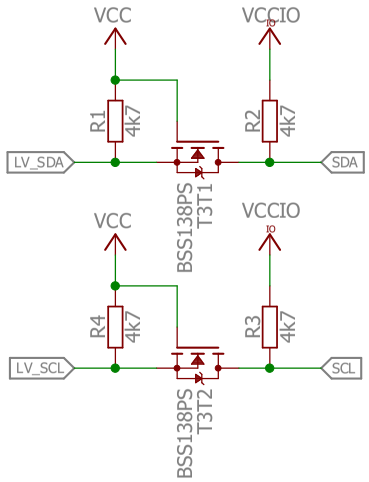

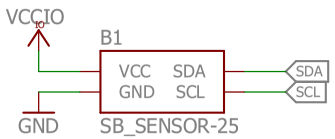

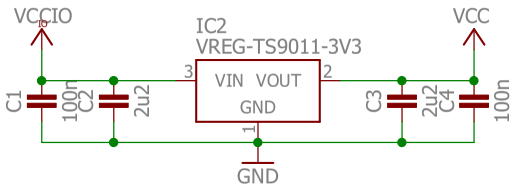

Released under the CERN Open Hardware Lizenz 1.2
https://www.ohwr.org/projects/cernohl/wiki

Designed by Watterott electronic for senseBox https://sensebox.de

www.watterott.com

senseBox-BMP280_v20

30.04.2018 17:14

Sheet: 1/1

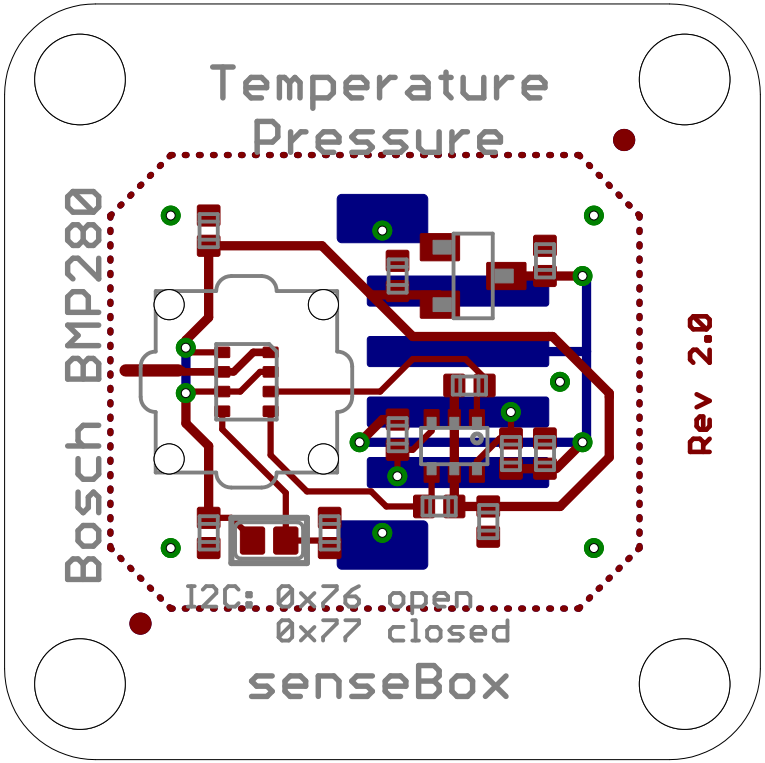
Temperature
Pressure
Bosch BMP280
Rev 2.0
I2C: 0x76 open
0x77 closed
senseBox