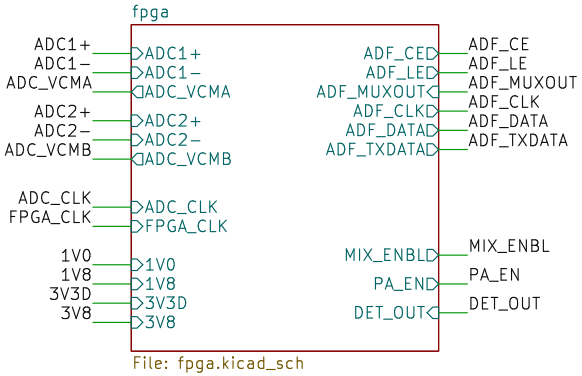

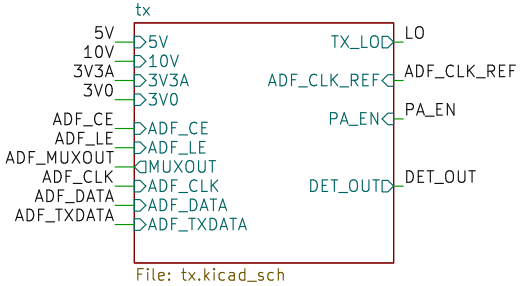

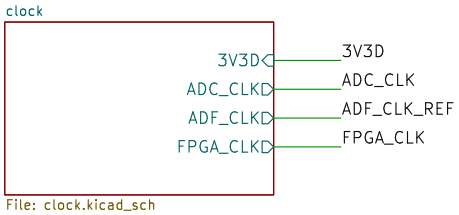

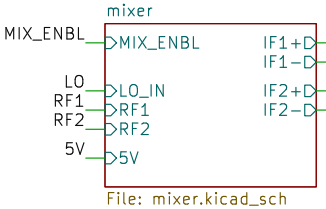

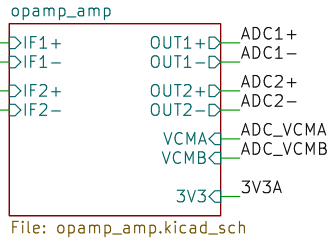

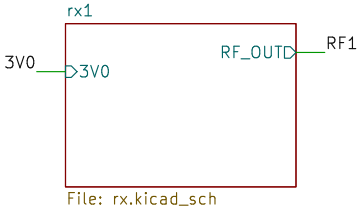

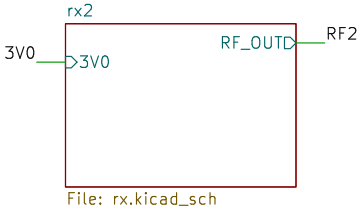

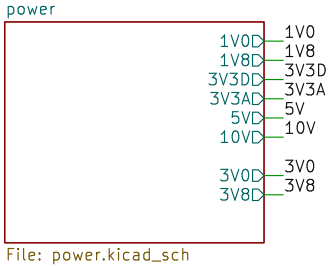

Sheet: /
File: fmcw3.kicad_sch

Title: FMCW3 by CENK KESKİN

Size: A4	Date:	Rev:
KiCad E.D.A. 9.0.7		Id: 1/12

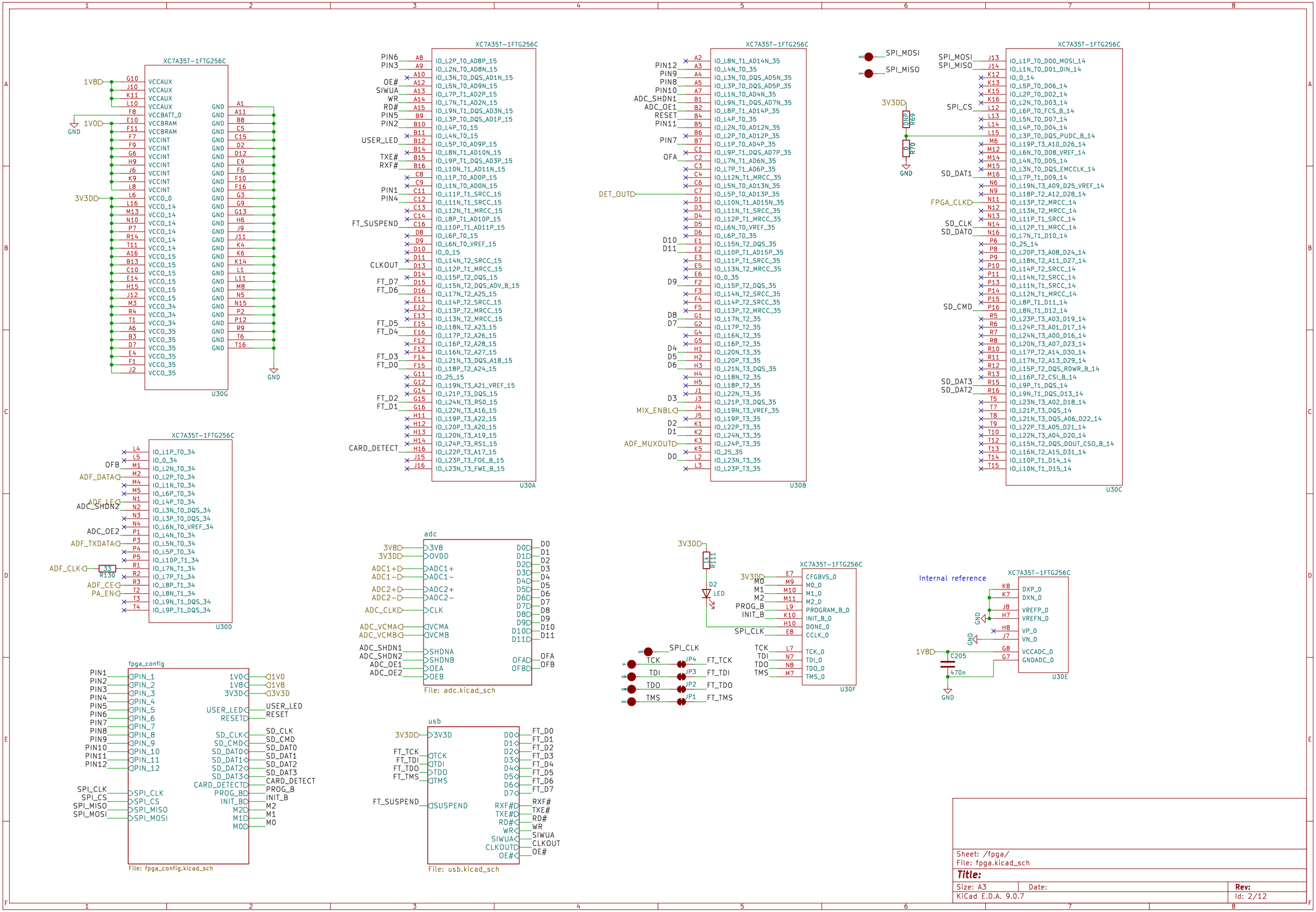
XC7A35T-1FTG256C
U30G
U30A
U30B
U30C
U30D
U30E
U30F
1V8
1V0
3V3D
GND
OFB
ADF_DATA
ADF_LE
ADC_SHDN2
ADC_OE2
ADF_TXDATA
ADF_CLK
R130
33
ADF_CE
PA_EN
PIN6
PIN3
OE#
SIWUA
WR
RD#
PIN5
PIN2
USER_LED
TXE#
RXF#
PIN1
PIN4
FT_SUSPEND
CLKOUT
FT_D7
FT_D6
FT_D5
FT_D4
FT_D3
FT_D0
FT_D2
FT_D1
CARD_DETECT
PIN12
PIN9
PIN8
PIN10
ADC_SHDN1
ADC_OE1
RESET
PIN11
PIN7
OFA
DET_OUT
D10
D11
D9
D8
D7
D4
D5
D6
D3
MIX_ENBL
D2
D1
ADF_MUXOUT
D0
SPI_MOSI
SPI_MISO
SPI_CS
SD_DAT1
FPGA_CLK
SD_CLK
SD_DAT0
SD_CMD
SD_DAT3
SD_DAT2
DNP
R69
0
R70
adc
3V8
3V3D
ADC1+
ADC1−
ADC2+
ADC2−
ADC_CLK
ADC_VCMA
ADC_VCMB
ADC_SHDN1
ADC_SHDN2
ADC_OE1
ADC_OE2
OVDD
CLK
VCMA
VCMB
SHDNA
SHDNB
OEA
OEB
OFA
OFB
File: adc.kicad_sch
fpga_config
PIN1
PIN2
PIN3
PIN4
PIN5
PIN6
PIN7
PIN8
PIN9
PIN10
PIN11
PIN12
SPI_CLK
SPI_CS
SPI_MISO
SPI_MOSI
1V0
1V8
3V3D
USER_LED
RESET
SD_CLK
SD_CMD
SD_DAT0
SD_DAT1
SD_DAT2
SD_DAT3
CARD_DETECT
PROG_B
INIT_B
M2
M1
M0
File: fpga_config.kicad_sch
usb
3V3D
FT_TCK
FT_TDI
FT_TDO
FT_TMS
FT_SUSPEND
TCK
TDI
TDO
TMS
SUSPEND
D0
D1
D2
D3
D4
D5
D6
D7
RXF#
TXE#
RD#
WR
SIWUA
CLKOUT
OE#
File: usb.kicad_sch
1k
R111
D2
LED
JP4
JP3
JP2
JP1
CFGBVS_0
M0_0
M1_0
M2_0
PROGRAM_B_0
INIT_B_0
DONE_0
CCLK_0
TCK_0
TDI_0
TDO_0
TMS_0
Internal reference
DXP_0
DXN_0
VREFP_0
VREFN_0
VP_0
VN_0
VCCADC_0
GNDADC_0
C205
470n
Sheet: /fpga/
File: fpga.kicad_sch
Title:
Size: A3
Date:
Rev:
KiCad E.D.A. 9.0.7
Id: 2/12

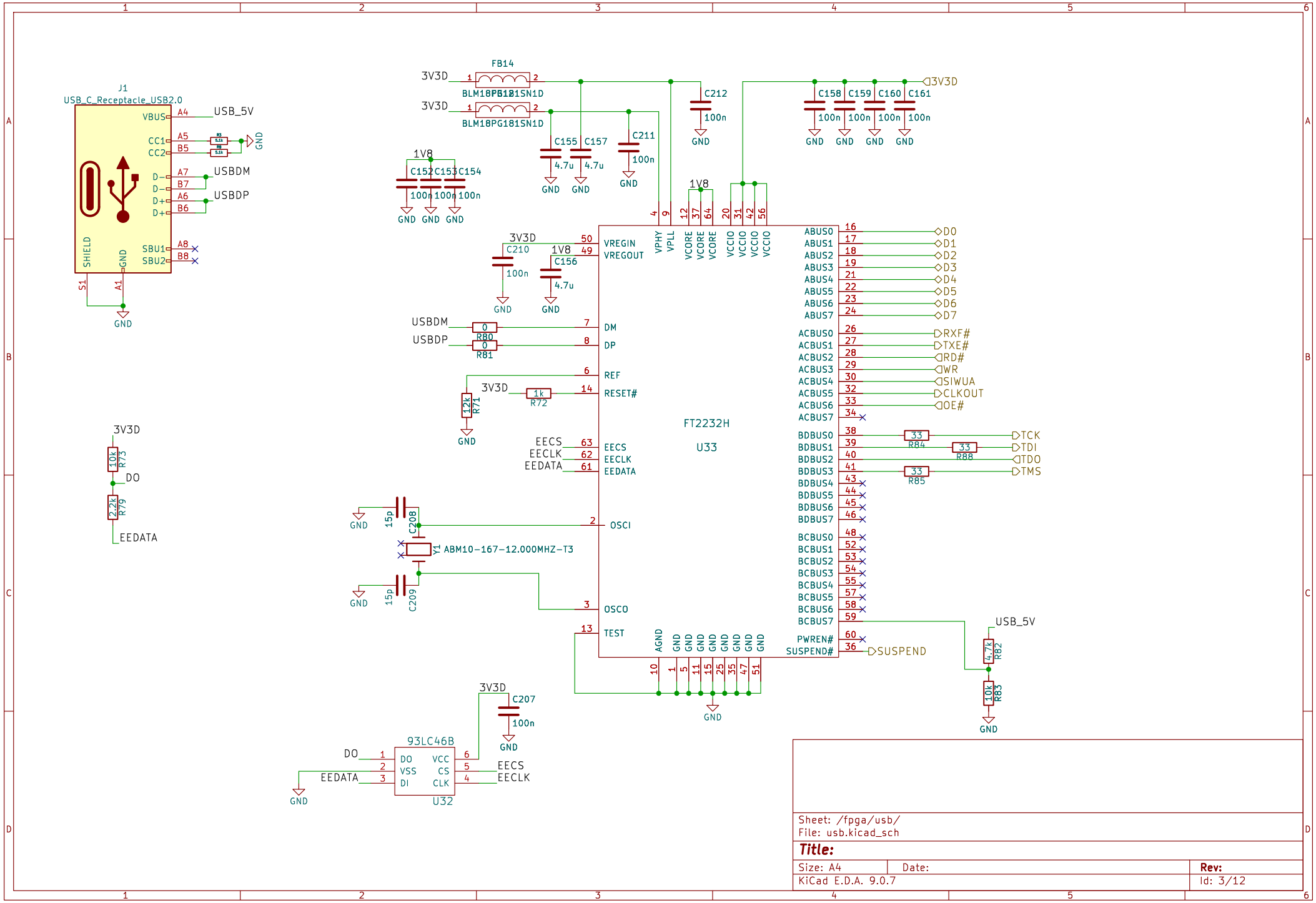

Sheet: /fpga/usb/
File: usb.kicad_sch

Title:

Size: A4	Date:	Rev:
KiCad E.D.A. 9.0.7		Id: 3/12

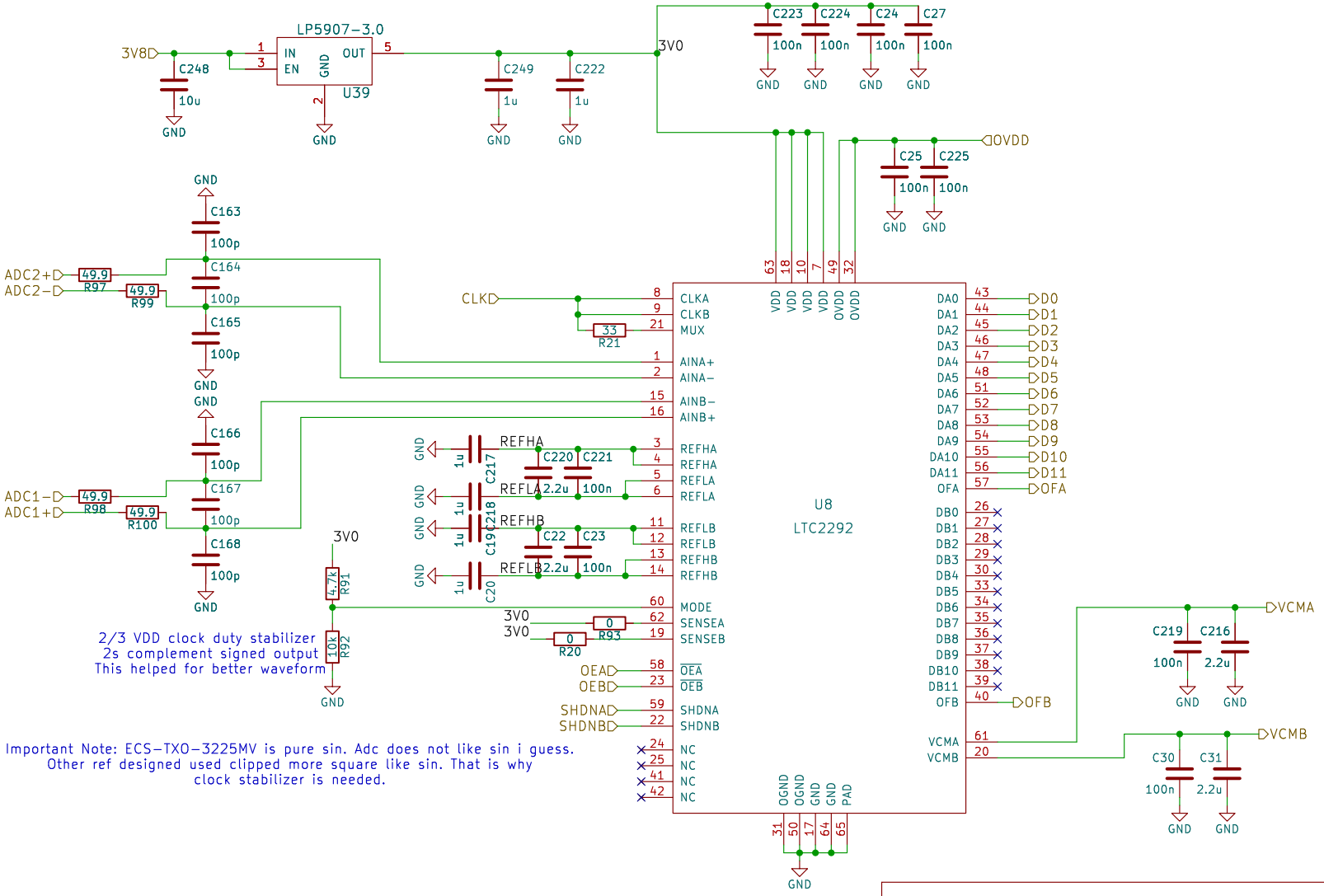

Sheet: /fpga/adc/
File: adc.kicad_sch

Title:

Size: A4	Date:	Rev:
KiCad E.D.A. 9.0.7		Id: 4/12

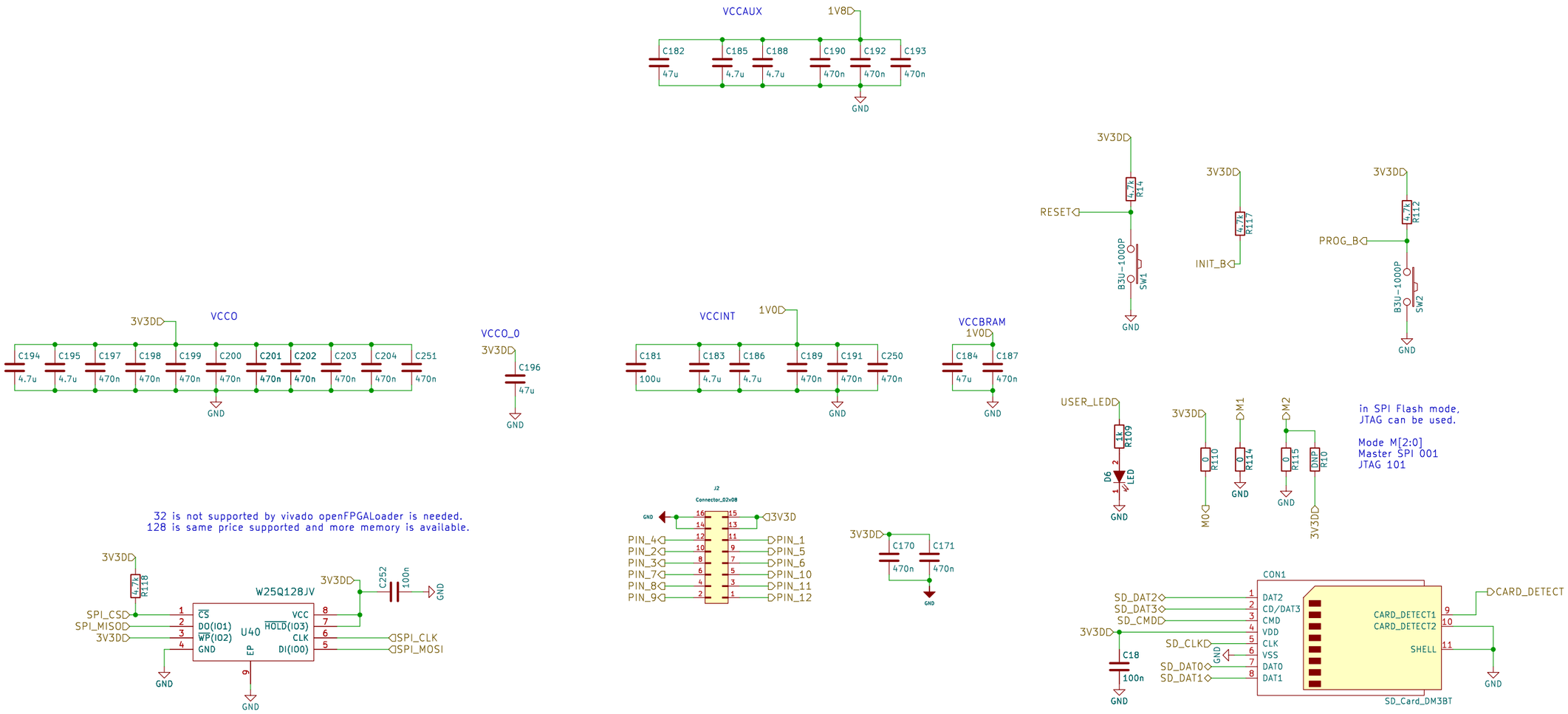

Sheet: /fpga/fpga_config/
File: fpga_config.kicad_sch

Title:

Size: A3	Date:	Rev:
KiCad E.D.A. 9.0.7		Id: 12/12

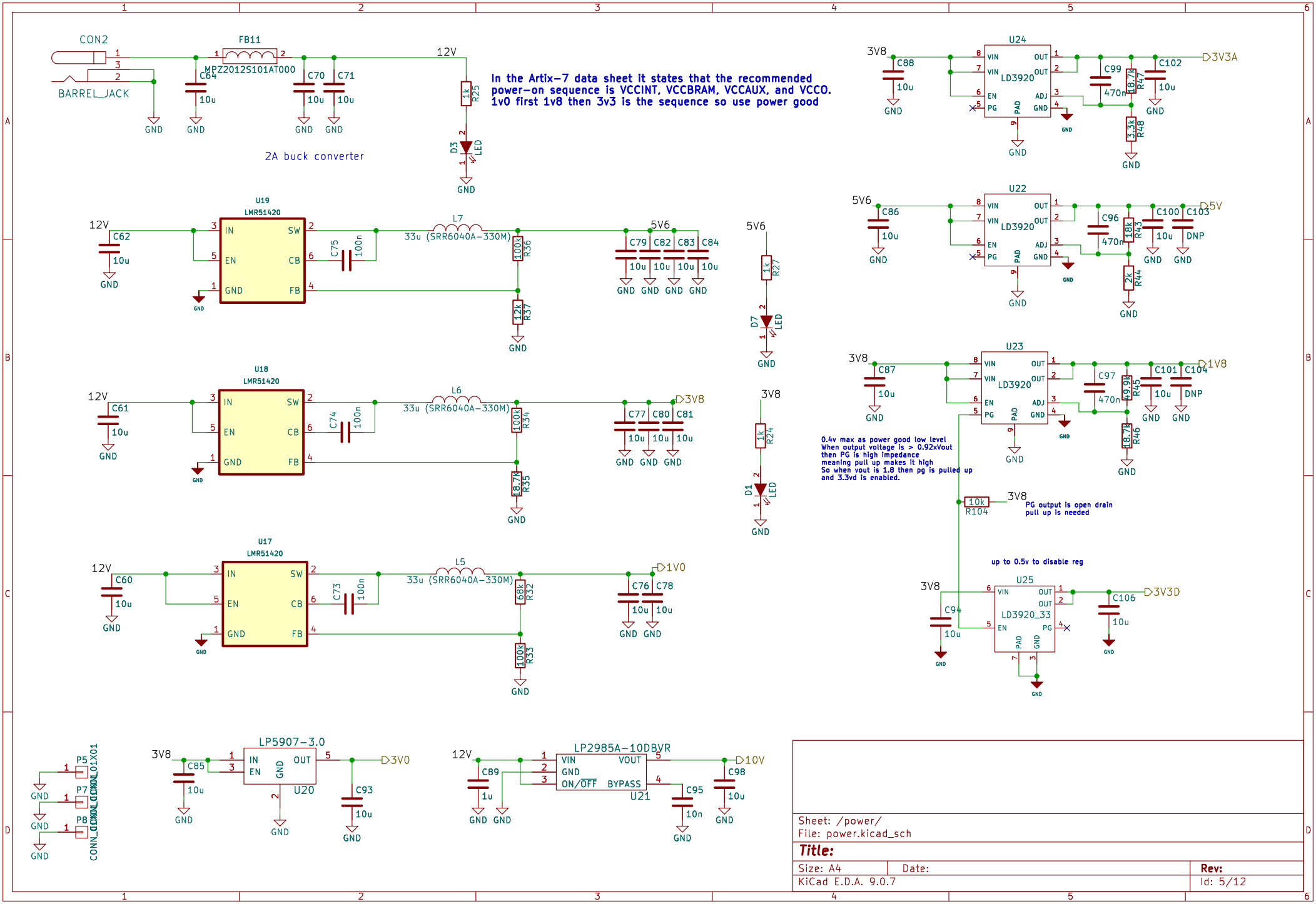

Sheet: /power/
File: power.kicad_sch

Title:

Size: A4	Date:	Rev:
KiCad E.D.A. 9.0.7		Id: 5/12

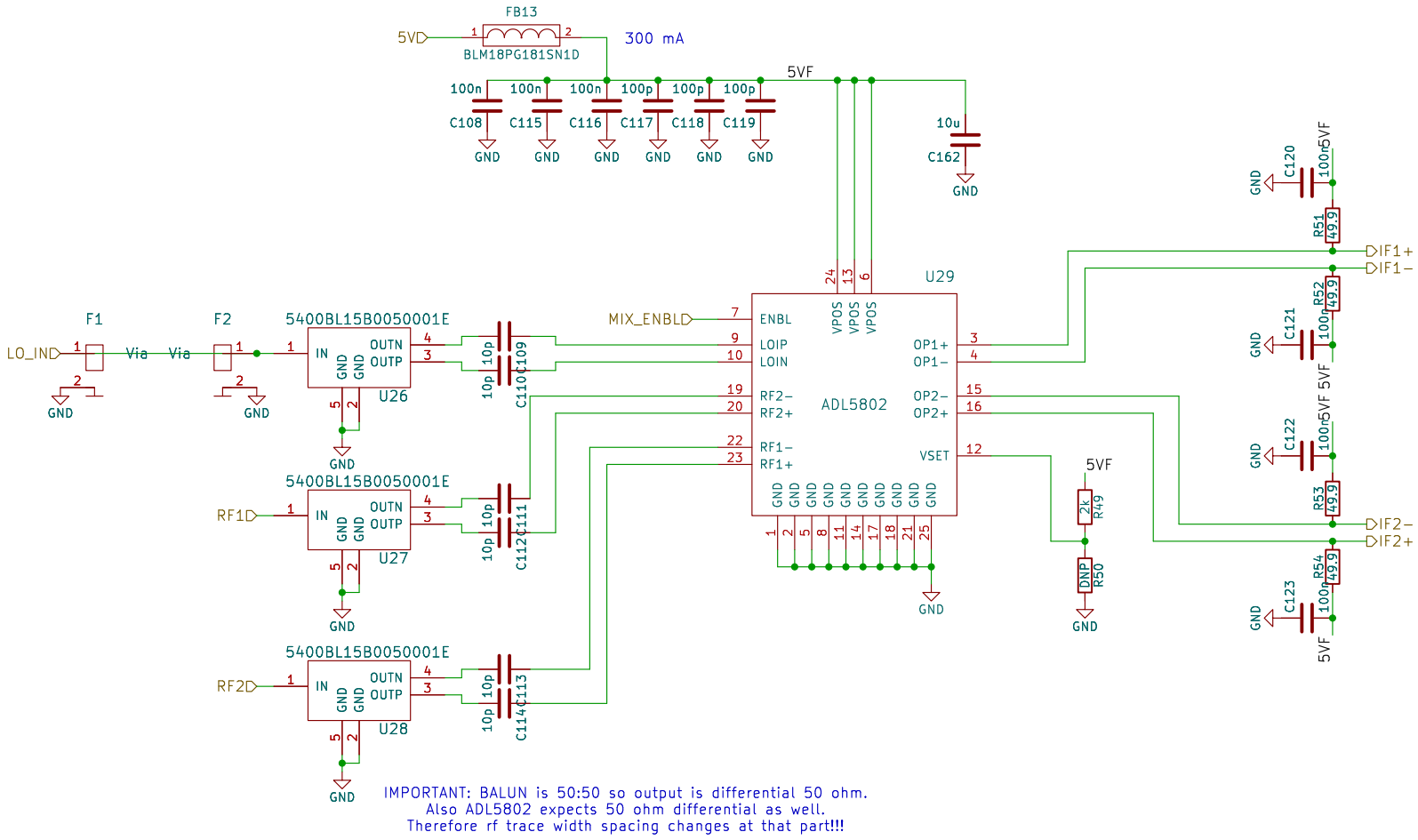

IMPORTANT: BALUN is 50:50 so output is differential 50 ohm.
Also ADL5802 expects 50 ohm differential as well.
Therefore rf trace width spacing changes at that part!!!

Sheet: /mixer/
File: mixer.kicad_sch

Title:

Size: A4	Date:	Rev:
KiCad E.D.A. 9.0.7		Id: 6/12

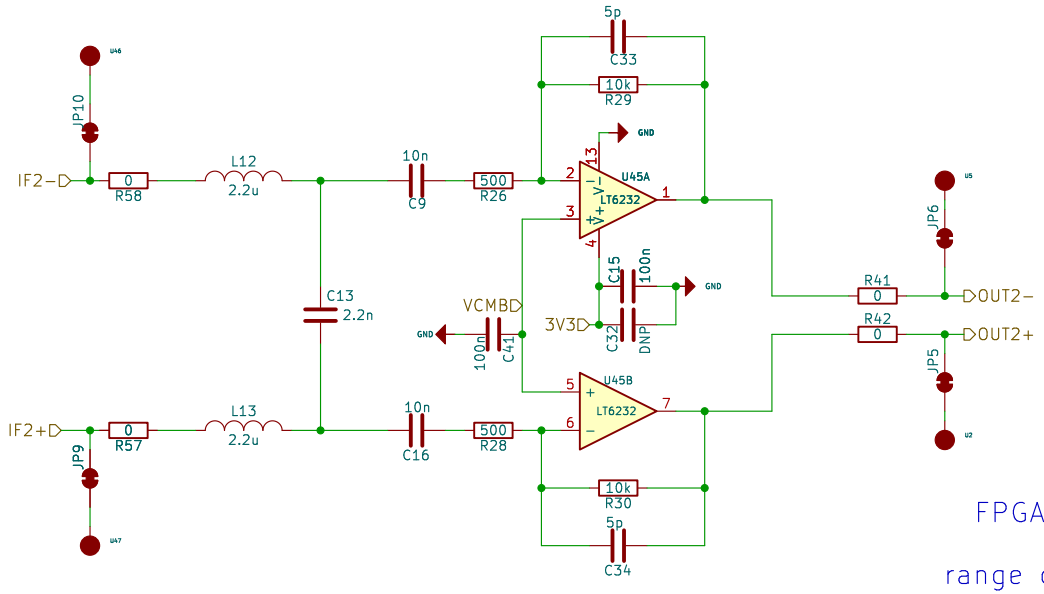

FPGA FIR Filter works perfectly.
Second stage for HPF
range compensation filer is removed

LT6232 has better noise performance as 1.1nV/√Hz
500 10K has less noise contribution

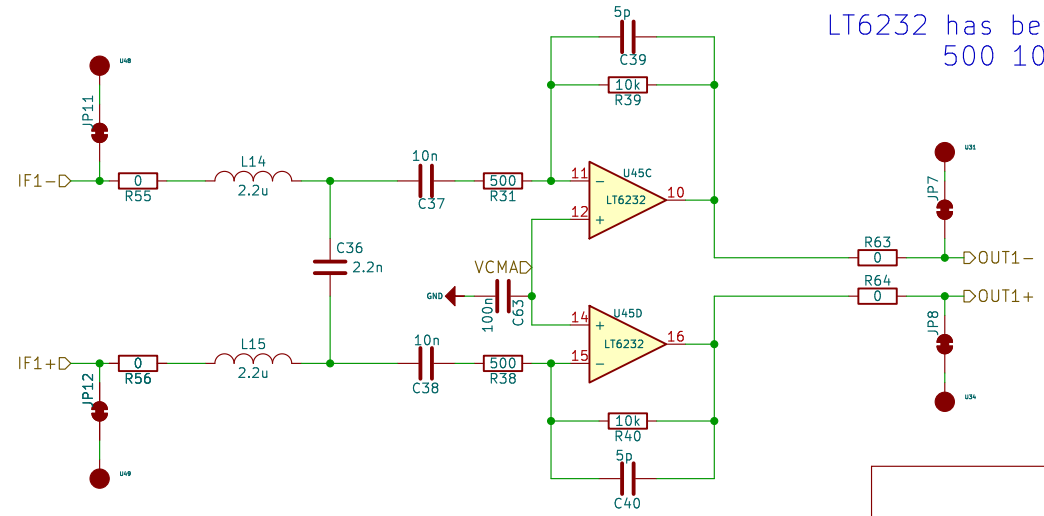

Sheet: /opamp_amp/
File: opamp_amp.kicad_sch

Title:

Size: A4	Date:	Rev:
KiCad E.D.A. 9.0.7		Id: 7/12

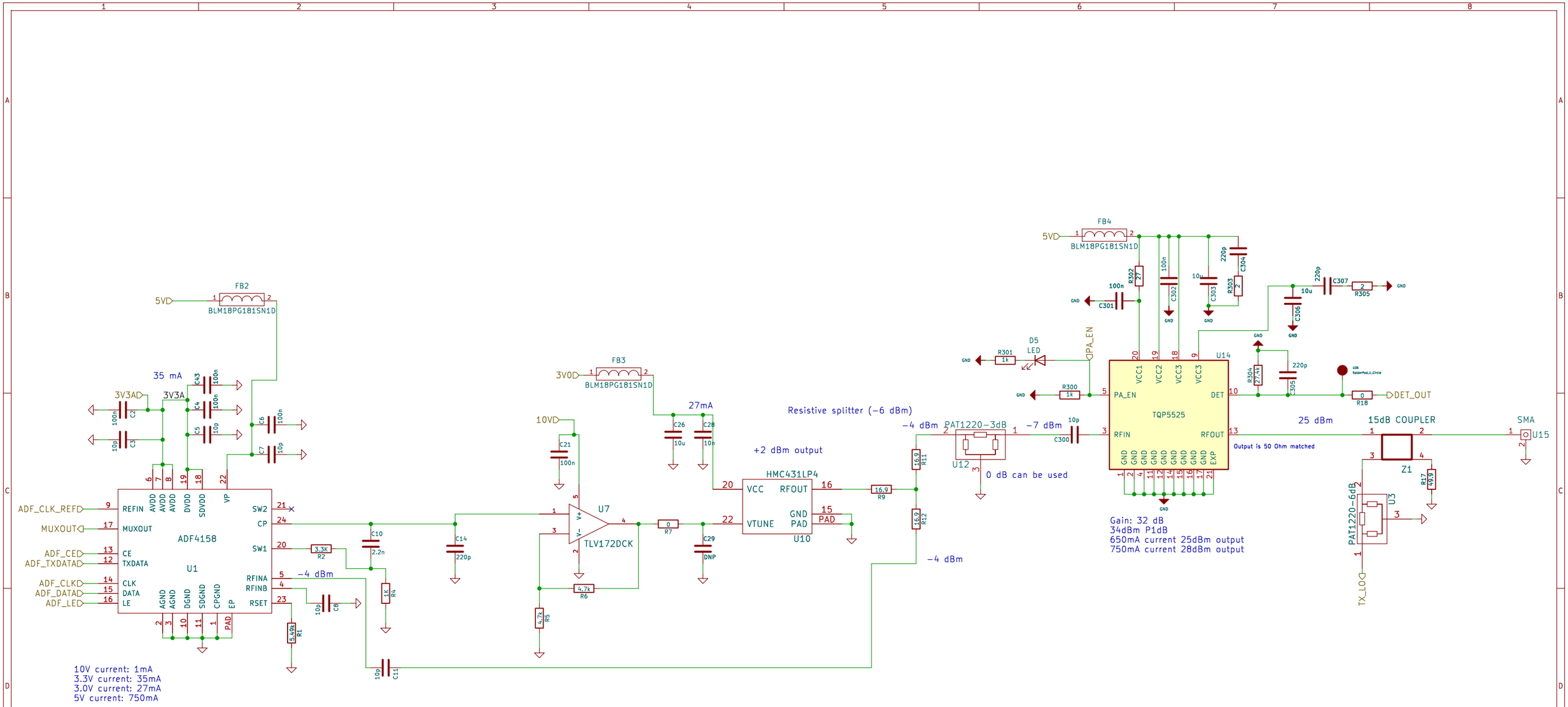

Sheet: /tx/
File: tx.kicad_sch

Title:

Size: A3	Date:	Rev:
KiCad E.D.A. 9.0.7		Id: 8/12

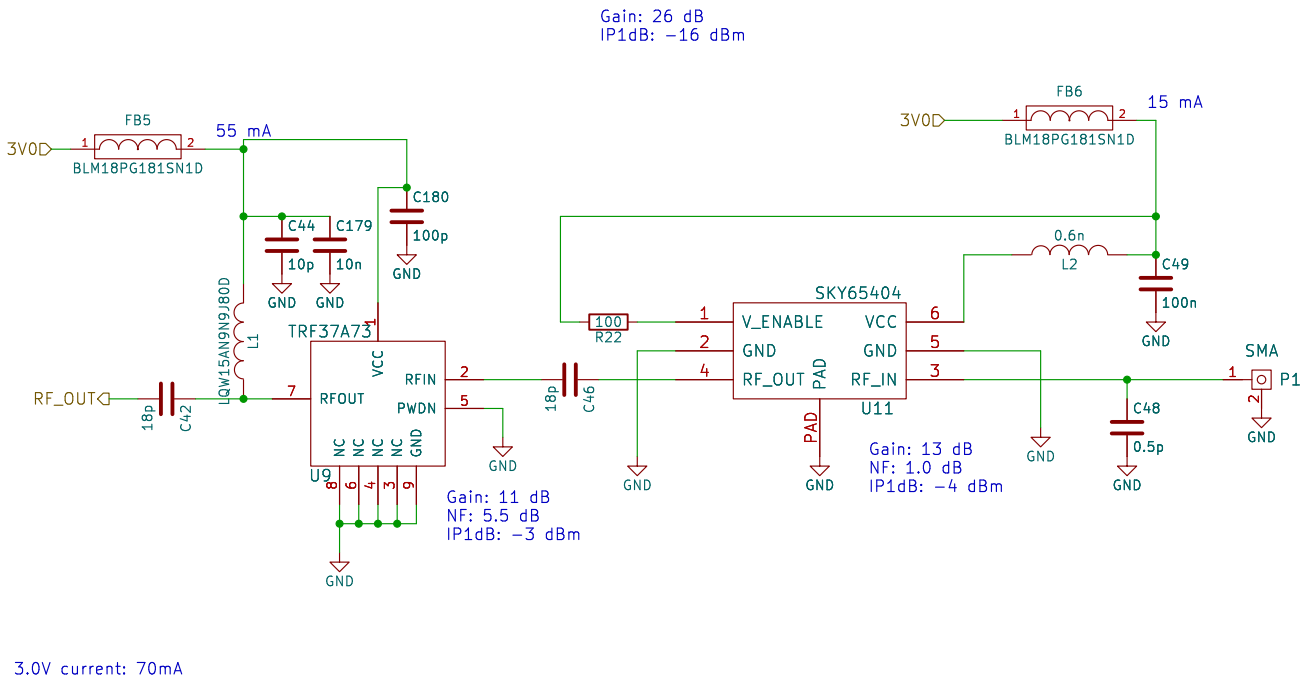

Sheet: /rx1/
File: rx.kicad_sch

Title:

Size: A4	Date:	Rev:
KiCad E.D.A. 9.0.7		Id: 9/12

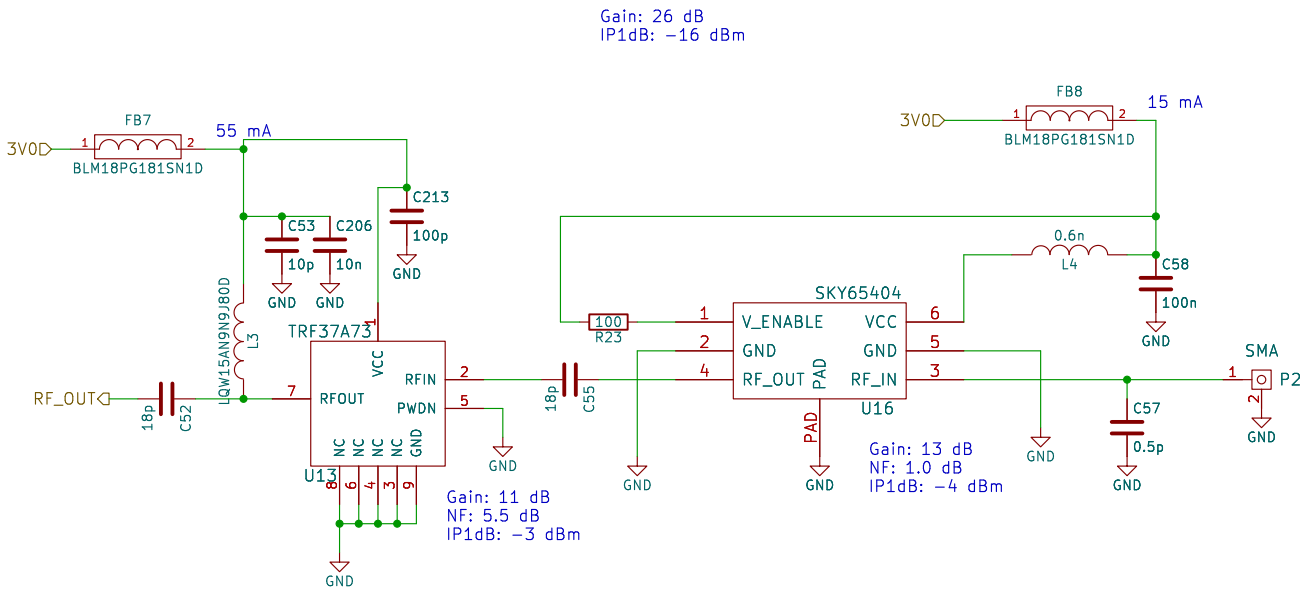

Sheet: /rx2/
File: rx.kicad_sch

Title:

Size: A4	Date:	Rev:
KiCad E.D.A. 9.0.7		Id: 10/12

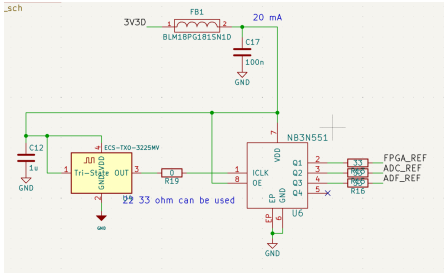

This is the prev design:
NB3N551 is obs.
Also this txo is generating pure sin.
ADC might need cmos like input not sin.
That could be the reason of duty stabilizer.

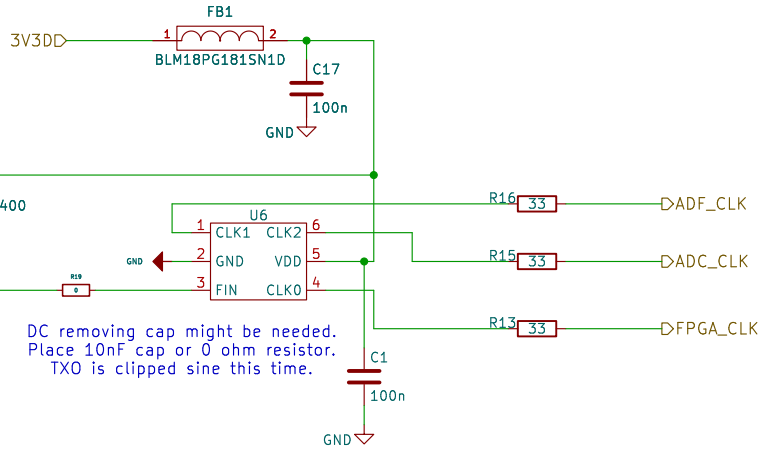

Sheet: /clock/
File: clock.kicad_sch

Title:

Size: A4	Date:	Rev:
KiCad E.D.A. 9.0.7		Id: 11/12