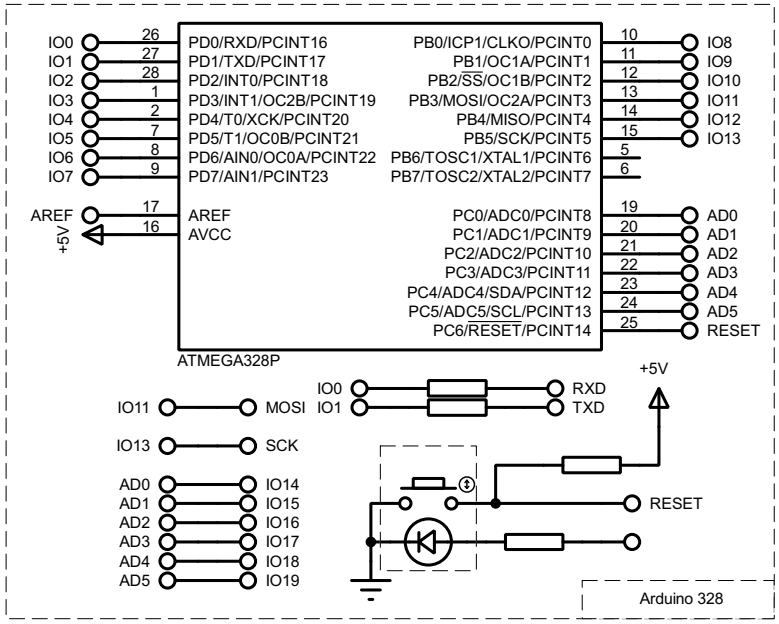
IO0 26 PD0/RXD/PCINT16
IO1 27 PD1/TXD/PCINT17
IO2 28 PD2/INT0/PCINT18
IO3 1 PD3/INT1/OC2B/PCINT19
IO4 2 PD4/T0/XCK/PCINT20
IO5 7 PD5/T1/OC0B/PCINT21
IO6 8 PD6/AIN0/OC0A/PCINT22
IO7 9 PD7/AIN1/PCINT23
AREF 17 AREF
+5V 16 AVCC
PB0/ICP1/CLKO/PCINT0 10 IO8
PB1/OC1A/PCINT1 11 IO9
PB2/SS/OC1B/PCINT2 12 IO10
PB3/MOSI/OC2A/PCINT3 13 IO11
PB4/MISO/PCINT4 14 IO12
PB5/SCK/PCINT5 15 IO13
PB6/TOSC1/XTAL1/PCINT6 5
PB7/TOSC2/XTAL2/PCINT7 6
PC0/ADC0/PCINT8 19 AD0
PC1/ADC1/PCINT9 20 AD1
PC2/ADC2/PCINT10 21 AD2
PC3/ADC3/PCINT11 22 AD3
PC4/ADC4/SDA/PCINT12 23 AD4
PC5/ADC5/SCL/PCINT13 24 AD5
PC6/RESET/PCINT14 25 RESET
ATMEGA328P
IO11 MOSI
IO13 SCK
AD0 IO14
AD1 IO15
AD2 IO16
AD3 IO17
AD4 IO18
AD5 IO19
IO0 RXD
IO1 TXD
+5V
RESET
Arduino 328

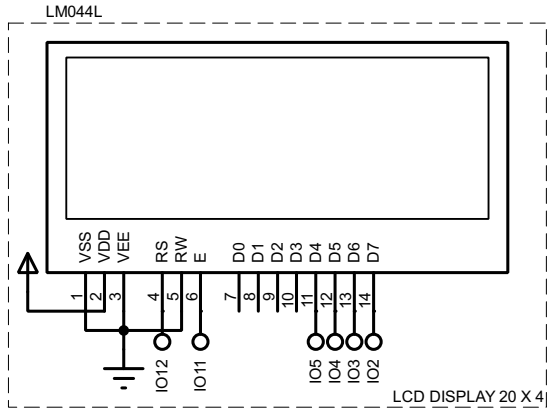
LM044L
VSS VDD VEE RS RW E D0 D1 D2 D3 D4 D5 D6 D7
1 2 3 4 5 6 7 8 9 10 11 12 13 14
IO12 IO11 IO5 IO4 IO3 IO2
LCD DISPLAY 20 X 4

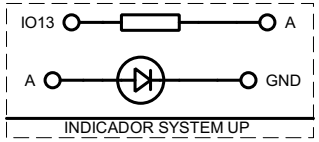
IO13 A
A GND
INDICADOR SYSTEM UP

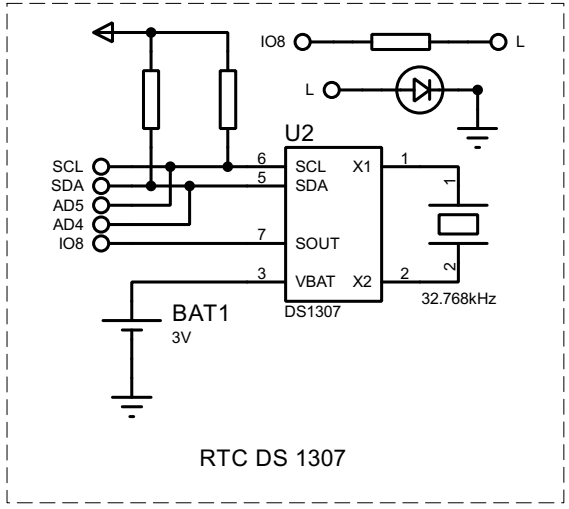
IO8 L
L
U2
SCL 6 SCL X1 1
SDA 5 SDA
AD5
AD4
IO8 7 SOUT
3 VBAT X2 2
DS1307
32.768kHz
BAT1
3V
RTC DS 1307

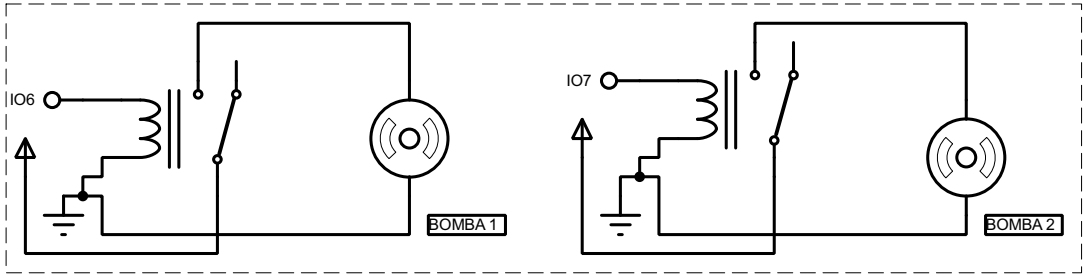
IO6
BOMBA 1
IO7
BOMBA 2