REV	COMMENT	DATE	DRAWN BY
1.0	WS Release	21/04/2021	SDD/KSS
1.1	Changed values of R308 and R322	12/05/2022	SDD/KSS
1.2	Aligned with BoM v0750	22/09/2022	SDD/KSS

RSK RZ/N2L

Table of Contents:

Page 1: Title Page
Page 2: RZN2L Microprocessor [POWER]
Page 3: RZN2L Microprocessor [IO]
Page 4: RZN2L Microprocessor [IO] B
Page 5: PSU
Page 6: User Interface
Page 7: USB
Page 8: PMOD, Grove and QWIIC Connections
Page 9: mikroBUS Connection
Page 10: J-Link On Board with S124
Page 11: SDRAM and NOR Flash
Page 12: SPI Flash Memory
Page 13: Pin Headers
Page 14: Ethernet P0
Page 15: Ethernet P1
Page 16: Ethernet P2
Page 17: Application Headers
Page 18: CAN and RS485
Page 19: USB to Serial
Page 20: Option Settings
Page 21: Option Settings B

1 TP4 Fiducial_0.5mm round

1 TP5 Fiducial_0.5mm round

Rubber Foot MP1 Rubber Foot MP2 Rubber Foot MP3 Rubber Foot MP4

Electronics Europe GmbH

Title: RSK+RZ/N2L
Title Page

Size: A3 | Document Number: D017892_04

Date: Thu Sep 22 13:46:12 2022 | PAGE 1 OF 21 | ISSUE 3.2

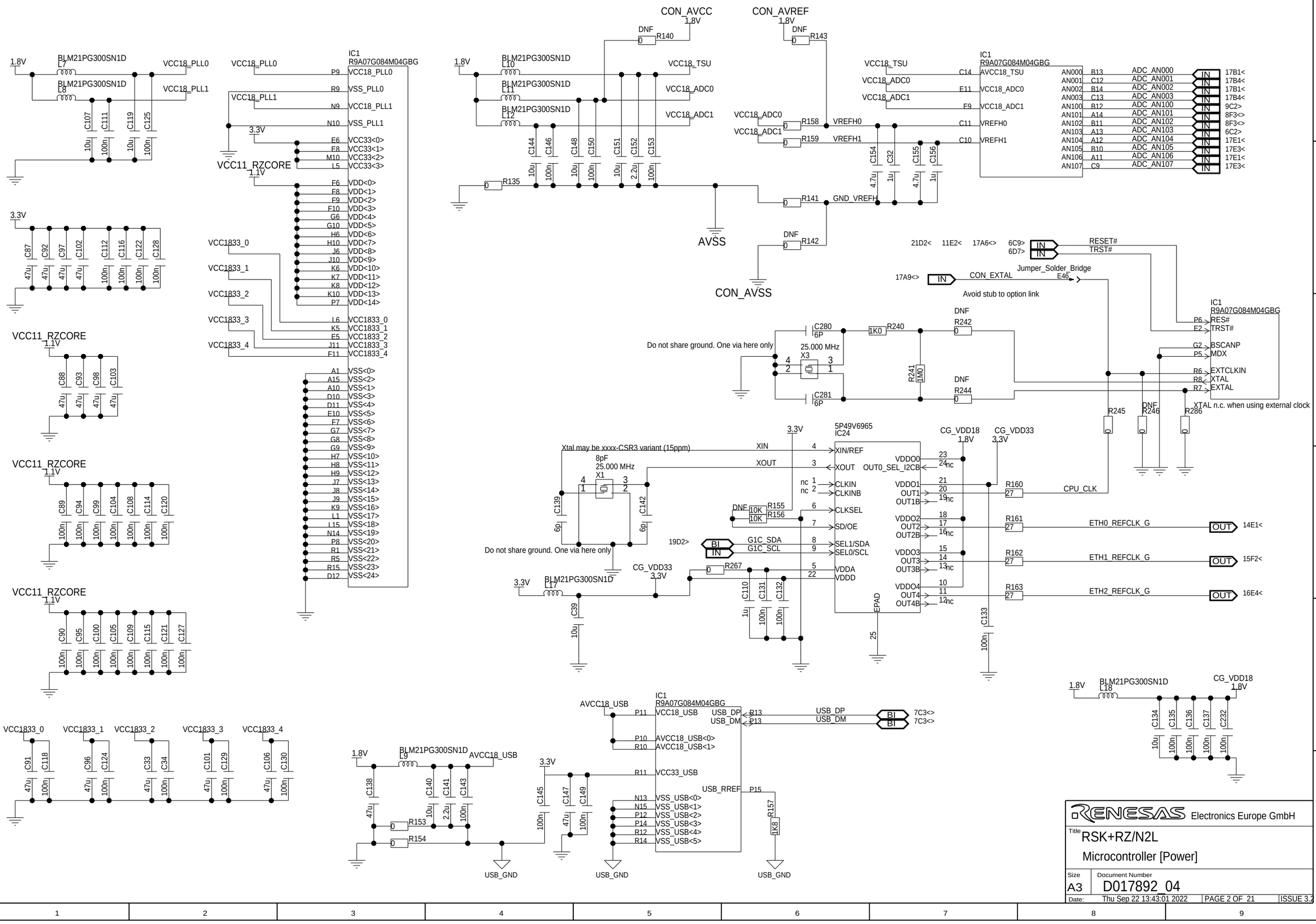
CON_AVCC
CON_AVREF
CON_AVSS
AVSS
IC1
R9A07G084M04GBG
VCC11_RZCORE
VCC18_PLL0
VCC18_PLL1
VCC18_TSU
VCC18_ADC0
VCC18_ADC1
VREFH0
VREFH1
GND_VREFH
ADC_AN000
ADC_AN001
ADC_AN002
ADC_AN003
ADC_AN100
ADC_AN101
ADC_AN102
ADC_AN103
ADC_AN104
ADC_AN105
ADC_AN106
ADC_AN107
RESET#
TRST#
CON_EXTAL
Jumper_Solder_Bridge
Avoid stub to option link
Do not share ground. One via here only
25.000 MHz
XTAL n.c. when using external clock
Xtal may be xxxx-CSR3 variant (15ppm)
8pF
5P49V6965
IC24
CG_VDD18
CG_VDD33
CPU_CLK
ETH0_REFCLK_G
ETH1_REFCLK_G
ETH2_REFCLK_G
G1C_SDA
G1C_SCL
AVCC18_USB
USB_DP
USB_DM
USB_RREF
USB_GND
RENESAS Electronics Europe GmbH
Title
RSK+RZ/N2L
Microcontroller [Power]
Size
A3
Document Number
D017892_04
Date:
Thu Sep 22 13:43:01 2022
PAGE 2 OF 21
ISSUE 3.2

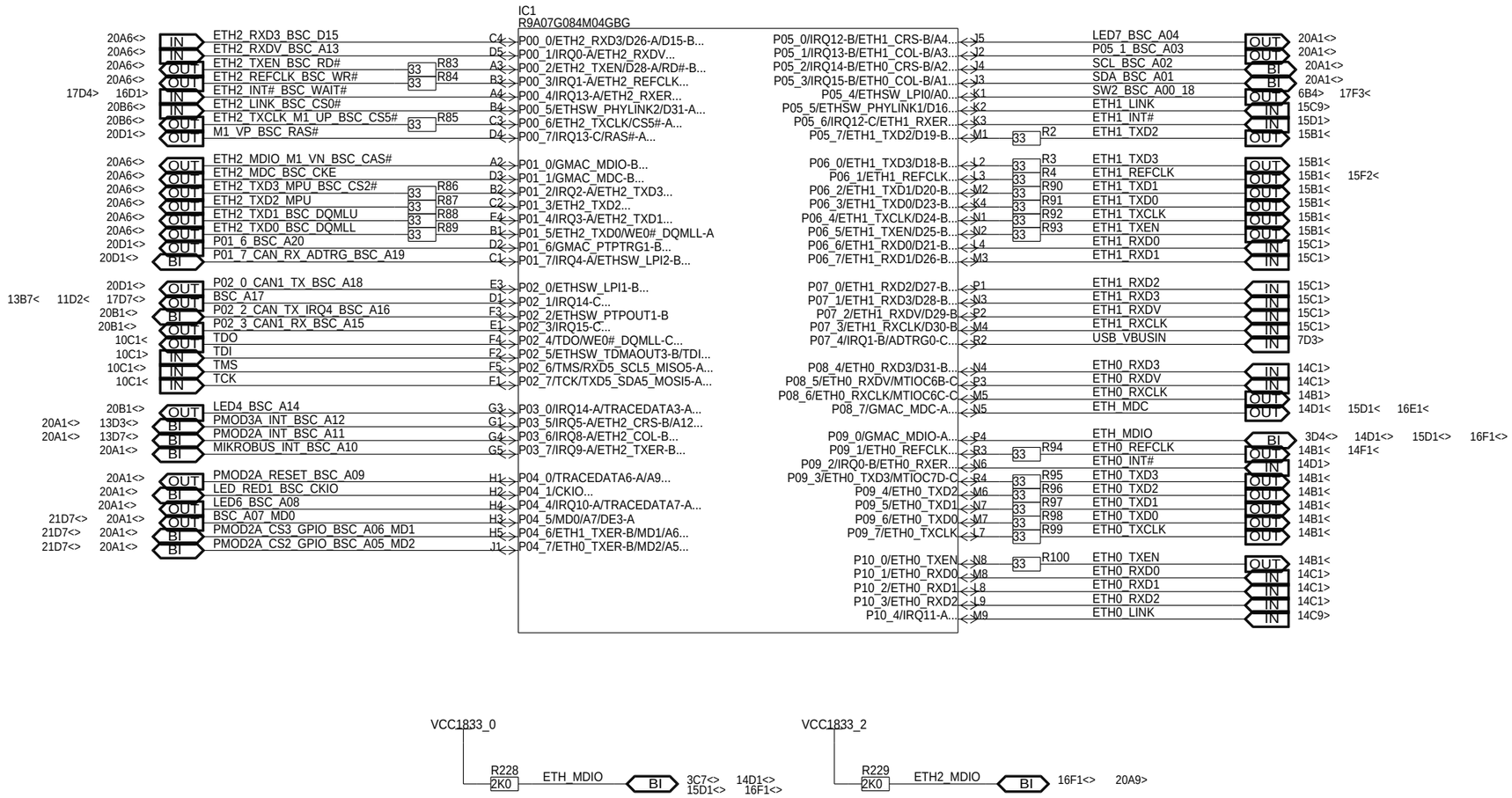

Title	RSK+RZ/N2L Microcontroller [IO]
Size	A3
Document Number	D017892_04
Date:	Thu Sep 22 12:57:08 2022
PAGE 3 OF 21	ISSUE 3.2

RENESAS Electronics Europe GmbH

IC1
R9A07G084M04GBG

16A1<	OUT	ESC_B_RESETOUT#	N11	P12_4/XSPI1_RESET0...	P18_0/MTIOC4C-A/MTIOC4A-D...	E14	SCI_TXD_HSPI_IO6	
					P18_1/IRQ10-B/MTIOC3D-A...	D15	SCI_RTS_M1_UN_HSPI_IO7	
13B3<> 12F6<>	BI	EEPROM_SCL	L10	P13_2/IRQ5-B/XSPI1_CS1...	P18_2/MTIOC4B-A/MTIOC4D-D...	D14	PMOD3A_GPIO2_LED_GRN_M1_WP	BI 21B6<>
13B7<> 12F6<>	BI	EEPROM_SDA	N12	P13_3/XSPI1_CKP...	P18_3/IRQ0-C/MTIOC4D-A...	E13	MB_RST#_M1_WN	OUT 17A9<> 9C2<
16A1< 15C1< 14C1<	OUT	ESC_RESETOUT#	L12	P13_4/XSPI1_CKN...	P18_4/TRACECTL-A/MTIC5V-B...	E12	SCK	OUT 8B2< 9C2<
13B3< 6E4< 17B5>	IN	DIP_SW2_18_M1_TRCCLK	M12	P13_5/XSPI0_WP1...	P18_5/IRQ1-C/MTIC5U-B...	D13	MOSI	OUT 8B2< 9C2<
13B3< 6E4< 17C5>	IN	DIP_SW1_18_M1_TRDCLK	M13	P13_6/XSPI0_WP0...	P18_6/IRQ11-C/TRACECLK-A...	C15	P18_6_MISO	IN 8B2> 9C2> 13B3<>
6E4< 17B5>	OUT	DIP_SW4_18_M2_TRCCLK	M11	P13_7/XSPI0_ECS1...				
6E4< 17C5>	IN	DIP_SW3_18_M2_TRDCLK	L13	P14_0/XSPI0_INT0...	P19_0/MDV4/USB_VBUSEN-C	B15	USB_VBUSEN_MDV4	OUT 21E6<> 7B3<
13E3<	OUT	HSPI_IO0	L14	P14_1/XSPI0_INT1/ETH1_COL-C...	P20_1/ETHSW_TDMAOUT0-A/MDV0...	B9	ETH_LED2_MDV0	OUT 6E1<
		HSPI0_ECS#_HSPI_CK	K12	P14_2/IRQ6-B/XSPI0_ECS0...	P20_2/ETHSW_TDMAOUT1-A/MDV1...	D8	ETH_LED0_MDV1	OUT 6D1<
		HSPI_IO1_A	M14	P14_3/XSPI0_RSTO1...	P20_3/ETHSW_TDMAOUT2-A/MDV2...	D9	ETH_LED1_MDV2	OUT 13B3<> 21E6<>
20D5<>	BI	XSPI0_DS_MPU	J13	P14_4/XSPI0_DS/BS-A...	P20_4/ETHSW_TDMAOUT3-A/MDV3...	A9	ETH_LED3_MDV3	OUT 13B7<> 21E6<>
20C5<>	OUT	XSPI0_CKN_BSC_CS3#	J12	P14_5/XSPI0_CKN/CS3#/POE8#-B				
20C5<>	OUT	XSPI0_CKP_BSC_A21	K13	P14_6/XSPI0_CKP/A21-B	P21_1/TRACEDATA0-B/D0...	B8	CS_TRACE_D0_BSC_D00_HSPI_INT#-B	
20C5<>	BI	XSPI0_IO0_BSC_A22	M15	P14_7/XSPI0_IO0/A22-B...	P21_2/TRACEDATA1-B/D1...	C8	TRACE_D1_BSC_D01	BI 13D7<> 20C1<>
20C5<>	BI	XSPI0_IO1_BSC_A23	L11	P15_0/XSPI0_IO1/A23-B...	P21_3/TRACEDATA2-B/D2...	A8	TRACE_D2_BSC_D02	BI 13D3<> 20C1<>
20C5<>	BI	XSPI0_IO2_BSC_A24	K14	P15_1/XSPI0_IO2/A24-B...	P21_4/TRACEDATA3-B/D3...	E7	TRACE_D3_BSC_D03	BI 13D7<> 20C1<>
20C5<>	BI	XSPI0_IO3_BSC_A25	K15	P15_2/XSPI0_IO3/A25-B...	P21_5/IRQ6-A/TRACEDATA4-B...	C7	P21_5_TRACE_D4_BSC_D04	BI 20C1<>
20C5<>	BI	XSPI0_IO4_MPU	K11	P15_3/XSPI0_IO4/MTIOC8C-B...	P21_6/IRQ9-C/TRACEDATA5-B...	D7	TRACE_D5_BSC_D05	BI 20C1<>
20C5<>	BI	XSPI0_IO5_MPU	H13	P15_4/XSPI0_IO5/MTIOC8D-B...	P21_7/IRQ10-C/TRACEDATA6-B...	B7	TRACE_D6_BSC_D06	BI 13C3<> 20C1<>
20C5<>	BI	XSPI0_IO6_MPU	J14	P15_5/XSPI0_IO6/MCLK2-B	P22_0/IRQ15-A/TRACEDATA7-B...	A7	TRACE_D7_BSC_D07	BI 13C7<> 20C1<>
20D5<>	BI	XSPI0_IO7_MPU	H12	P15_6/XSPI0_IO7/SSL12-A...	P22_1/TRACECTL-C/D8-A...	A6	LED5_BSC_D08	OUT 20C1<>
12D3<	OUT	OQFLASH_CS0	J15	P15_7/XSPI0_CS0/CTS5#-C...	P22_2/IRQ4-C/TRACECLK-C...	C6	TRACE_CLK_BSC_D09	BI 20D1<>
		ORAM_CS0_HSPI_CS#	G13	P16_0/XSPI0_CS1/ETH0_TXER-C...	P22_3/D10-A/MTIOC8D-C...	B6	LED_ORANGE_BSC_D10	OUT 20D1<>
12D2< 12B6< 12B1<	OUT	XSPI0_RESET0	H11	P16_1/XSPI0_RESET0...	P23_7/ETH2_RXD0/D22-A/D11-B...	D6	ETH2_RXD0_BSC_D11_MCLK4	IN 20A6<>
		NMI_18_HSPI_IO2	H14	P16_2/NMI-B/XSPI0_RESET1...	P24_0/ETH2_RXD1/D23-A/D12-B...	A5	ETH2_RXD1_BSC_D12_MDAT4	IN 20A6<>
		SW1_HSPI_IO3	G12	P16_3/IRQ7-B/XSPI0_RSTO0...	P24_1/ETH2_RXCLK/D24-A/D13-B...	B5	ETH2_RXCLK_BSC_D13_MCLK5	IN 20B6<>
		UART_USB_TX_HSPI_IO4	H15	P16_5/MTIC5U-A...	P24_2/ETH2_RXD2/D25-A/D14-B...	C5	ETH2_RXD2_BSC_D14_MDAT5	IN 20A6<>
		UART_USB_RX_HSPI_IO5	G11	P16_6/IRQ8-B/MTIC5V-A...				
8E8<	OUT	PMOD3A_RESET	G14	P16_7/MTIC5W-A/SCK0-B				
21D7<> 8E8<>	BI	PMOD3A_GPIO1_MDD	F12	P17_0/MDD/ESC_IRQ-B...				
21A2<>	OUT	LED_RED2_TRACE_CTL_M1_POE	F14	P17_3/TRACECTL-B/GTETRGA-A...				
8E4<	IN	SCI_CTS	F13	P17_4/TRACECLK-B/MTIOC3C-A...				
7B3>	BI	USB_OVRCUR	F15	P17_5/RSTOUT#/MTIOC3A-A...				
9C7< 17A9<>	OUT	MIK_PWM_SCK	G15	P17_6/MTIOC3B-A/GTIOC1A-A...				
17A9< 9C7> 8E4>	BI	SCI_RXD	E15	P17_7/MTIOC4A-A/MTIOC4C-D...				

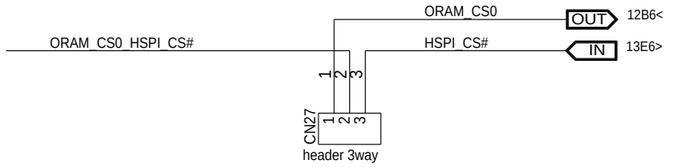

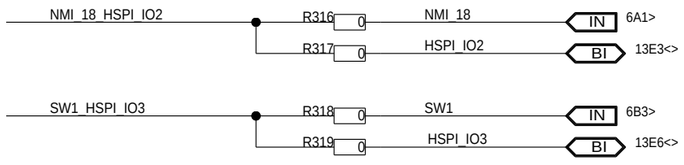

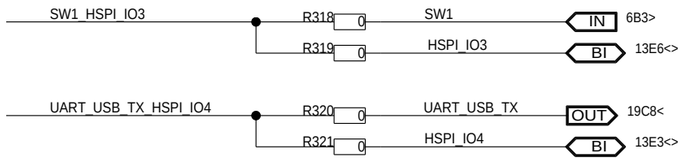

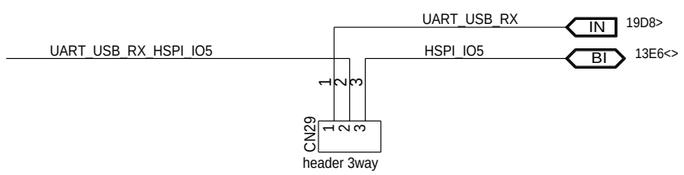

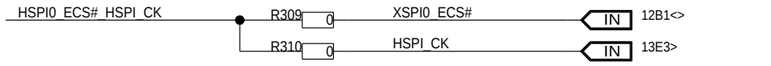

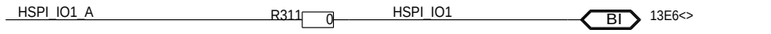

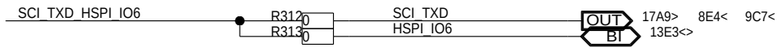

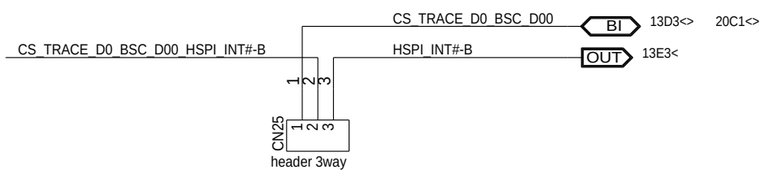

RENESAS Electronics Europe GmbH

Title: RSK+RZ/N2L
Microcontroller [IO]B

Size	Document Number		
A3	D017892_04		
Date: Thu May 12 17:42:22 2022	PAGE 4 OF 21	ISSUE 3.2	

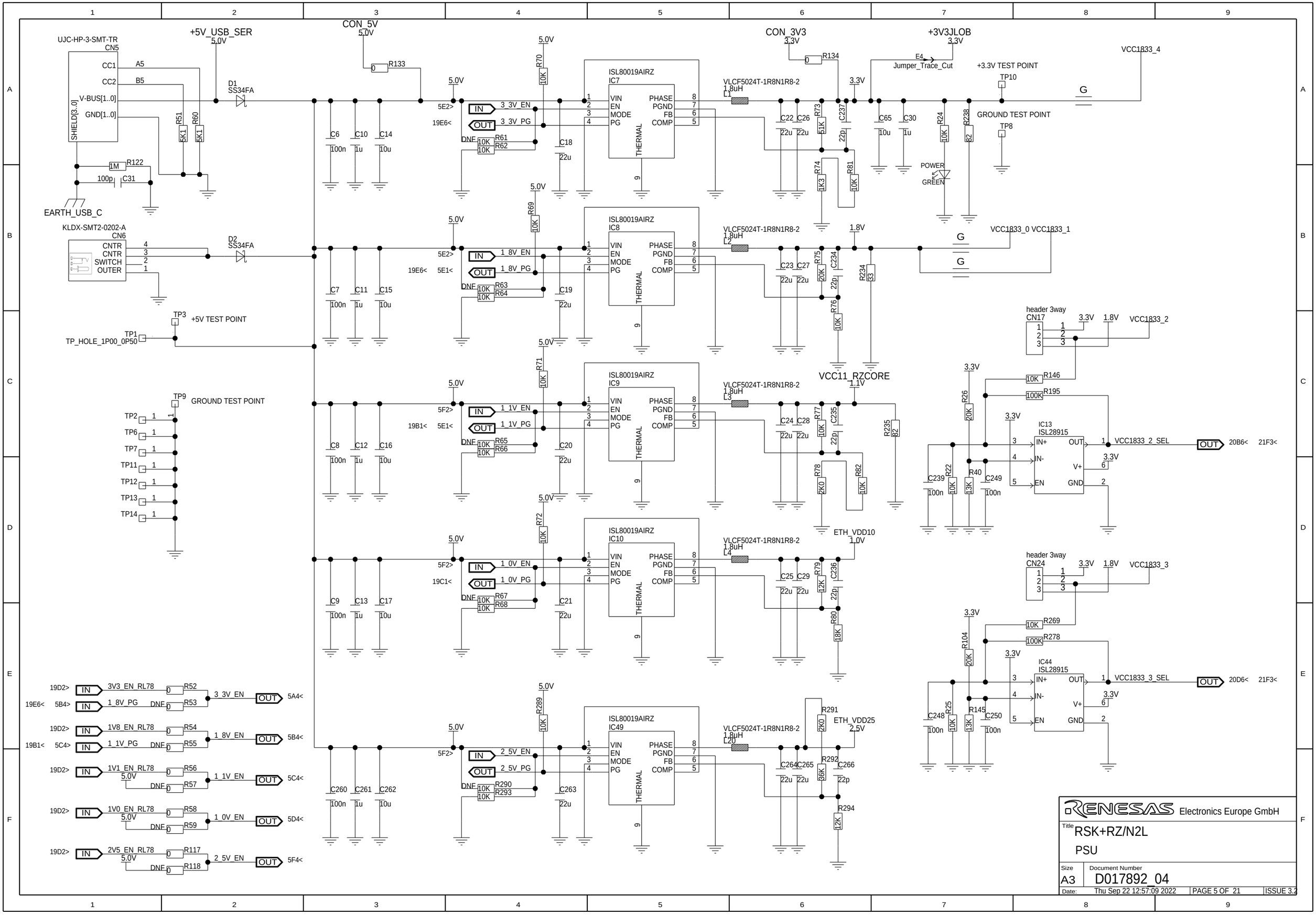
+5V_USB_SER
CON_5V
CON_3V3
+3V3JLOB
UJC-HP-3-SMT-TR
CN5
CC1
CC2
V-BUS[1..0]
GND[1..0]
SHIELD[3..0]
EARTH_USB_C
D1
SS34FA
R133
R134
E4
Jumper_Trace_Cut
+3.3V TEST POINT
TP10
GROUND TEST POINT
TP8
VCC1833_4
KLDX-SMT2-0202-A
CN6
CNTR
SWITCH
OUTER
D2
TP3
+5V TEST POINT
TP1
TP_HOLE_1P00_0P50
TP9
TP2
TP6
TP7
TP11
TP12
TP13
TP14
ISL80019AIRZ
IC7
IC8
IC9
IC10
IC49
VIN
EN
MODE
PG
PHASE
PGND
FB
COMP
THERMAL
IN
OUT
3_3V_EN
3_3V_PG
1_8V_EN
1_8V_PG
1_1V_EN
1_1V_PG
1_0V_EN
1_0V_PG
2_5V_EN
2_5V_PG
VLCF5024T-1R8N1R8-2
1.8uH
L1
L2
L3
L4
L20
VCC11_RZCORE
1.1V
ETH_VDD10
1.0V
ETH_VDD25
2.5V
POWER
GREEN
header 3way
CN17
CN24
VCC1833_0
VCC1833_1
VCC1833_2
VCC1833_3
IC13
IC44
ISL28915
VCC1833_2_SEL
VCC1833_3_SEL
3V3_EN_RL78
1V8_EN_RL78
1V1_EN_RL78
1V0_EN_RL78
2V5_EN_RL78
RENESAS Electronics Europe GmbH
RSK+RZ/N2L
PSU
A3
D017892_04
Thu Sep 22 12:57:09 2022
PAGE 5 OF 21
ISSUE 3.2

USER PUSH-BUTTONS

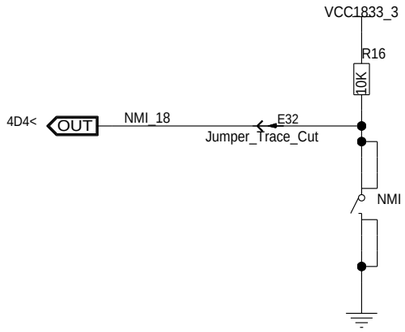

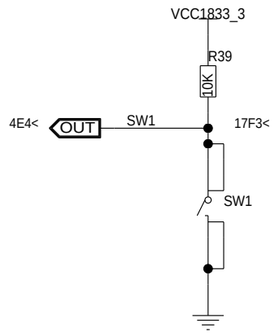

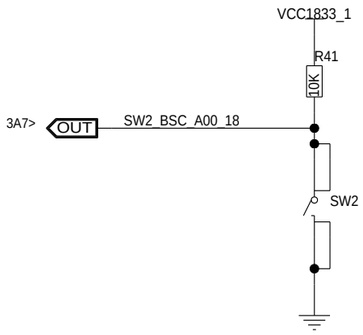

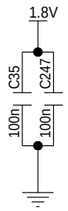

RESET PUSH-BUTTON

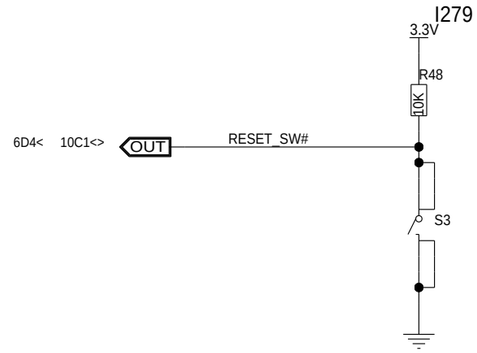

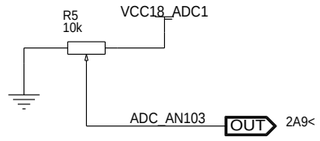

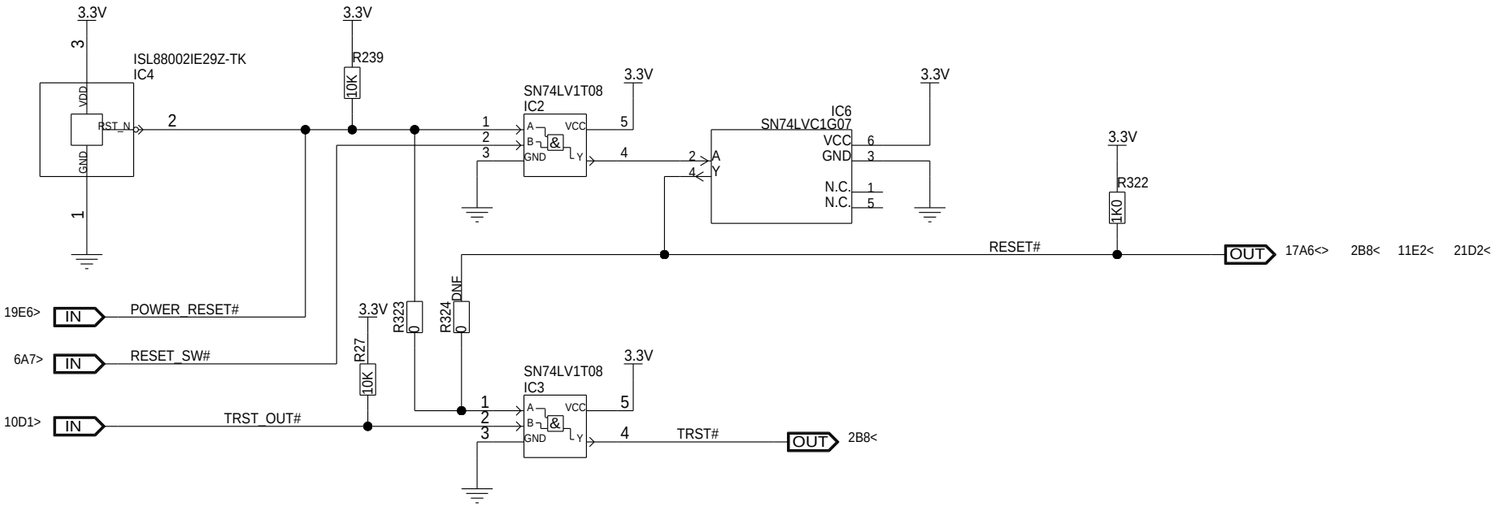

ETHER-CAT LEDS

MDV Signals are sampled at reset
Low level (pulled down by resistors)
causes interfaces to be set at 1.8V

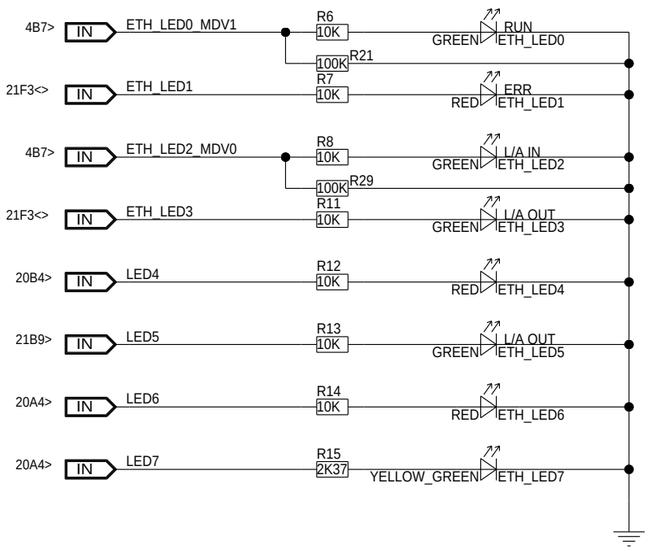

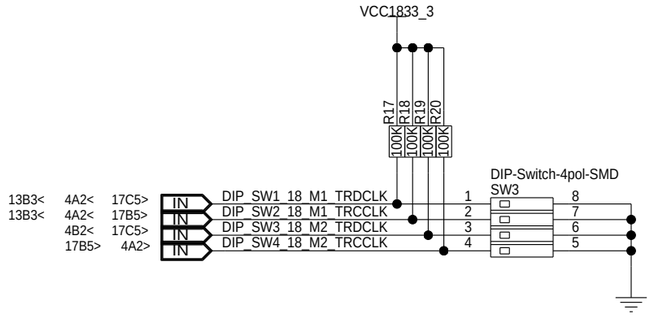

RSK USER LEDS

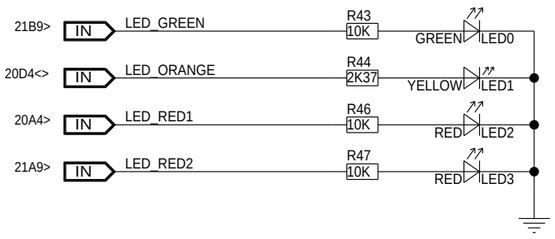

RENESAS Electronics Europe GmbH

Title: RSK+RZ/N2L
User Interface

Size	Document Number	
A3	D017892_04	
Date: Thu Sep 22 12:57:09 2022	PAGE 6 OF 21	ISSUE 3.2

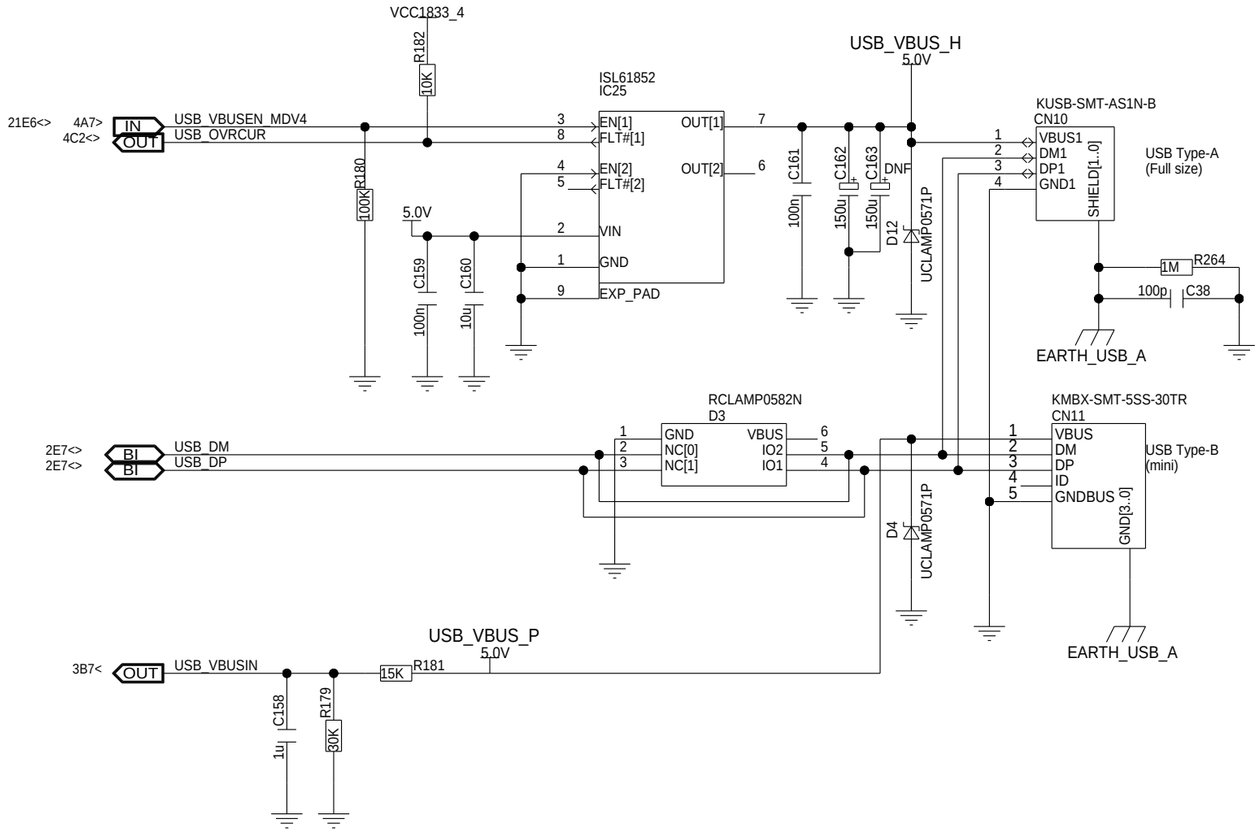

Electronics Europe GmbH	
Title	RSK+RZ/N2L USB
Size	A3
Document Number	D017892_04
Date:	Thu Sep 22 12:57:10 2022
PAGE 7 OF 21	ISSUE 3.2

PMOD-2A

SPI

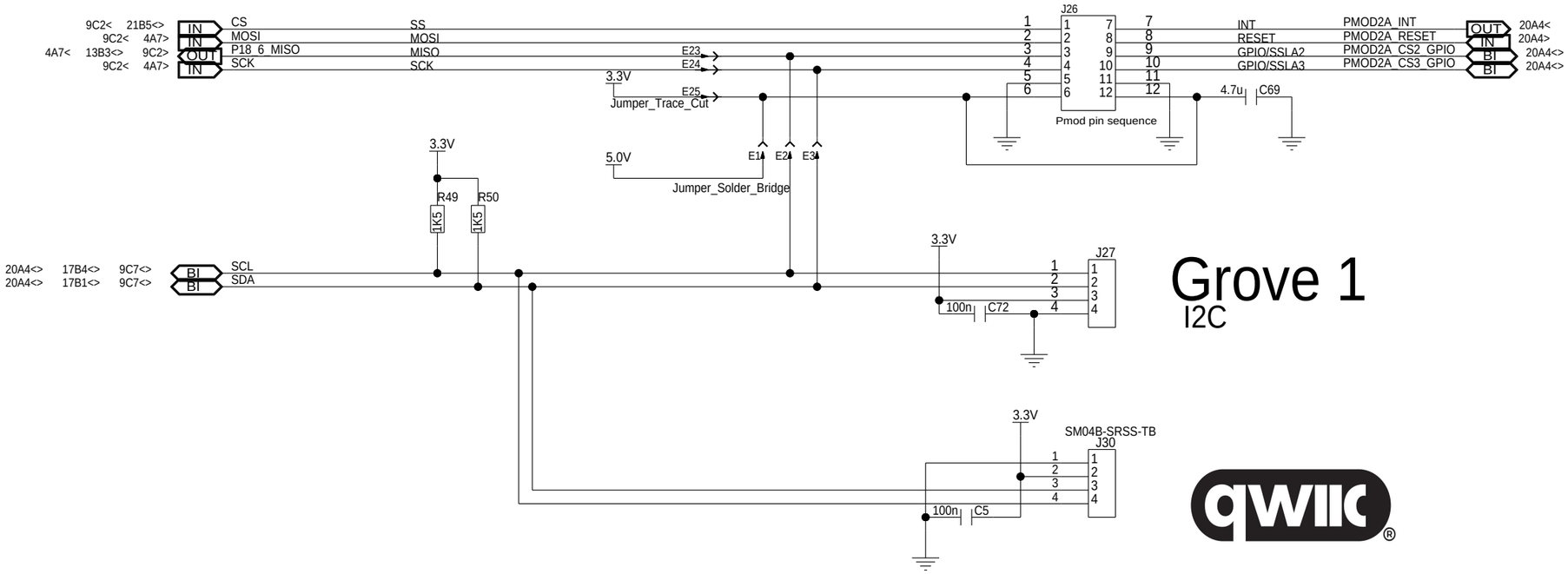

Grove 1

I2C

PMOD-3A

UART

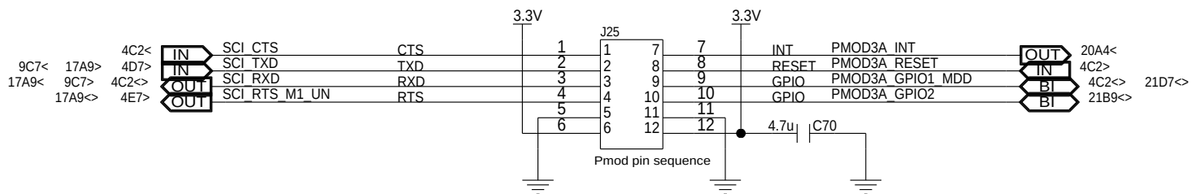

Grove 2

ANALOG

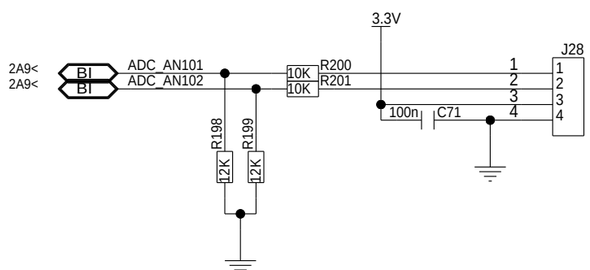

RENESAS Electronics Europe GmbH

Title: RSK+RZ/N2L
PMOD, Grove and QWIIC Connections

Size	Document Number		
A3	D017892_04		
Date: Thu Sep 22 12:57:10 2022	PAGE 8 OF 21	ISSUE 3.2	

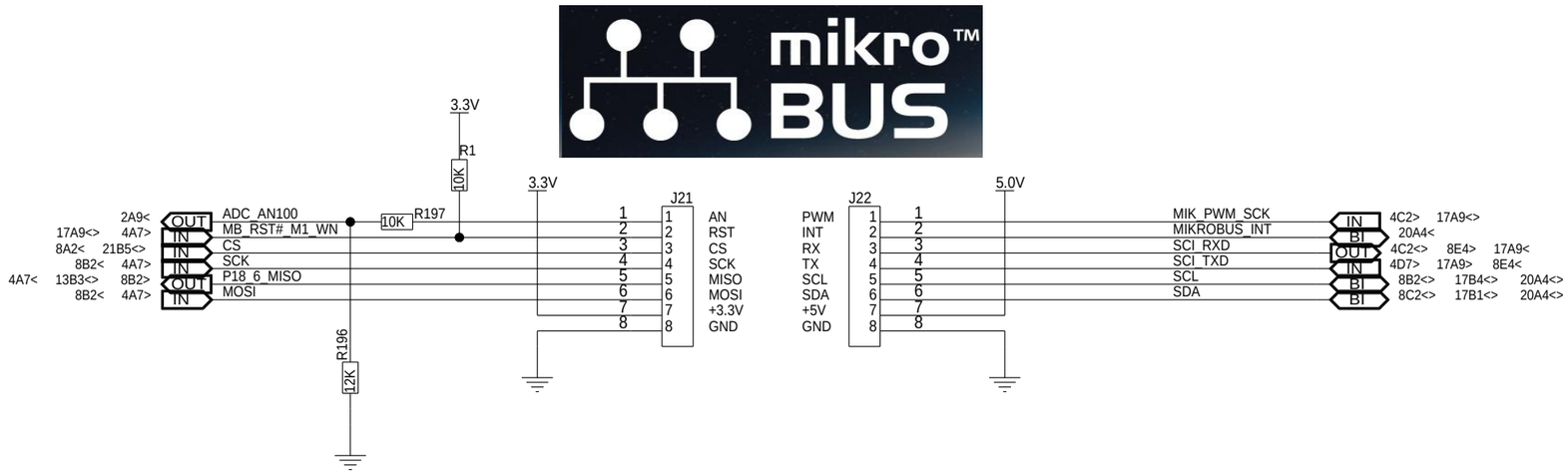

RENESAS Electronics Europe GmbH

Title: RSK+RZ/N2L
mikroBUS Connection

Size	Document Number		
A3	D017892_04		
Date: Thu Sep 22 12:57:11 2022	PAGE 9 OF 21	ISSUE 3.2	

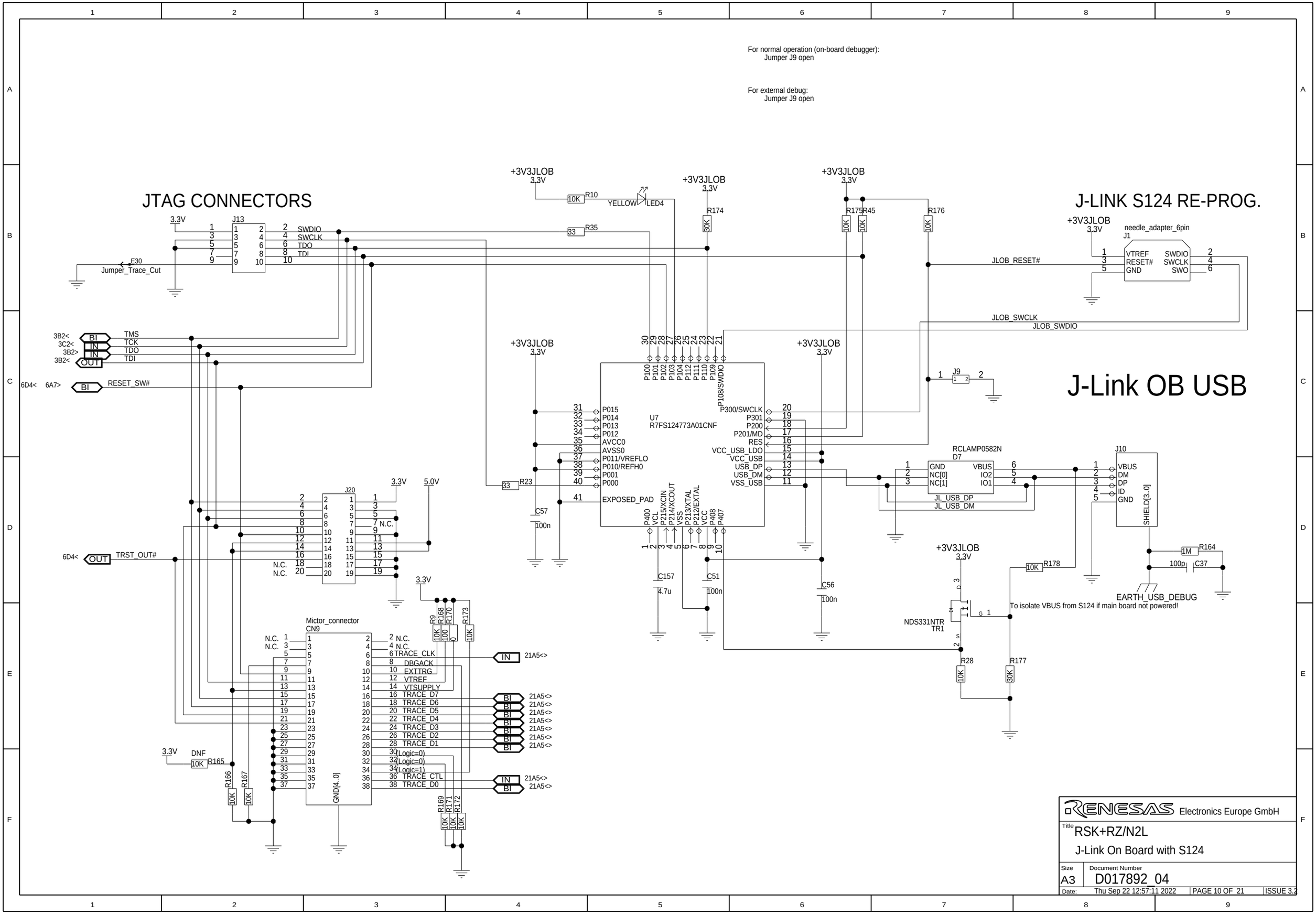
For normal operation (on-board debugger):
Jumper J9 open
For external debug:
Jumper J9 open
JTAG CONNECTORS
J-LINK S124 RE-PROG.
J-Link OB USB
J13
SWDIO
SWCLK
TDO
TDI
E30
Jumper_Trace_Cut
+3V3JLOB
3.3V
R10
YELLOW
LED4
R35
R174
R175
R45
R176
needle_adapter_6pin
J1
VTREF
RESET#
GND
SWDIO
SWCLK
SWO
JLOB_RESET#
JLOB_SWCLK
JLOB_SWDIO
TMS
TCK
TDO
TDI
RESET_SW#
U7
R7FS124773A01CNF
P100
P101
P102
P103
P104
P112
P111
P110
P109
P108/SWDIO
P015
P014
P013
P012
AVCC0
AVSS0
P011/VREFLO
P010/REFH0
P001
P000
EXPOSED_PAD
P300/SWCLK
P301
P200
P201/MD
RES
VCC_USB_LDO
VCC_USB
USB_DP
USB_DM
VSS_USB
P400
VCL
P215/XCIN
P214/XCOUT
VSS
P213/XTAL
P212/EXTAL
VCC
P408
P407
J9
RCLAMP0582N
D7
GND
NC[0]
NC[1]
VBUS
IO2
IO1
JL_USB_DP
JL_USB_DM
J10
VBUS
DM
DP
ID
GND
SHIELD[3..0]
R164
100p
C37
EARTH_USB_DEBUG
R178
NDS331NTR
TR1
To isolate VBUS from S124 if main board not powered!
R28
R177
R23
C57
100n
C157
4.7u
C51
100n
C56
100n
J20
TRST_OUT#
5.0V
N.C.
Mictor_connector
CN9
GND[4..0]
TRACE_CLK
DBGACK
EXTTRG
VTREF
VTSUPPLY
TRACE_D7
TRACE_D6
TRACE_D5
TRACE_D4
TRACE_D3
TRACE_D2
TRACE_D1
(Logic=0)
(Logic=0)
(Logic=1)
TRACE_CTL
TRACE_D0
21A5<>
DNF
R165
R166
R167
R169
R171
R172
R173
R170
R168
R9
RENESAS Electronics Europe GmbH
Title
RSK+RZ/N2L
J-Link On Board with S124
Size
A3
Document Number
D017892_04
Date:
Thu Sep 22 12:57:11 2022
PAGE 10 OF 21
ISSUE 3.2

SDRAM: 32MB

NOR Flash: 32MB

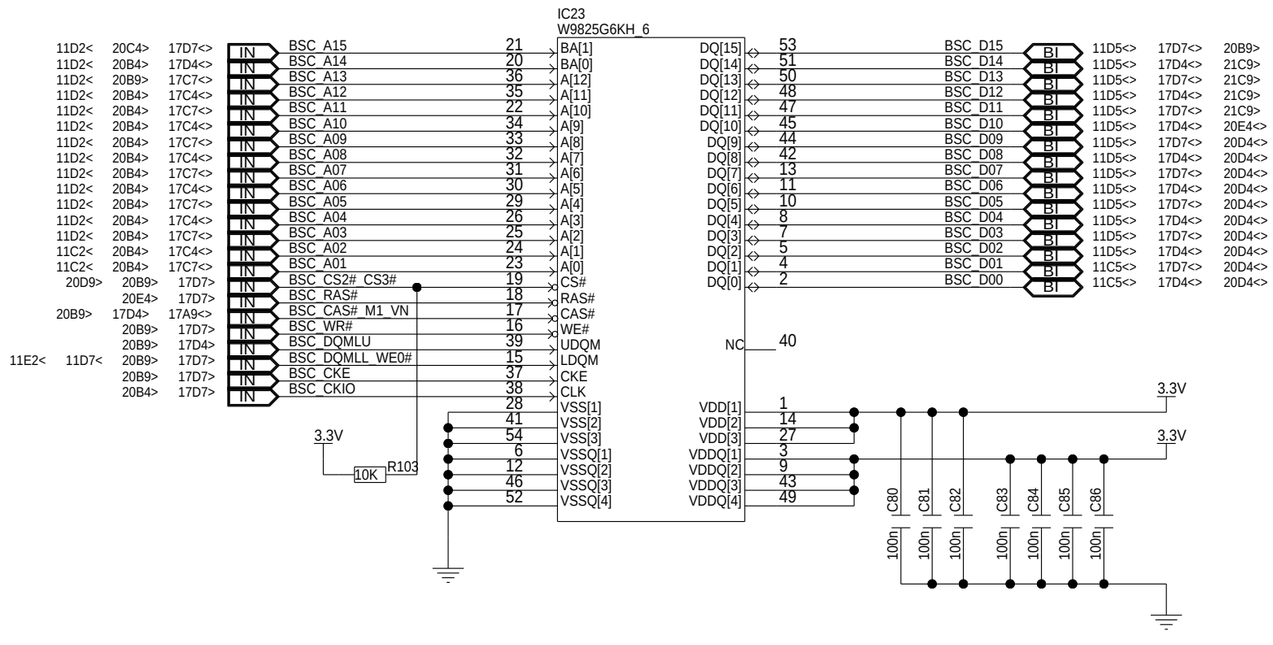

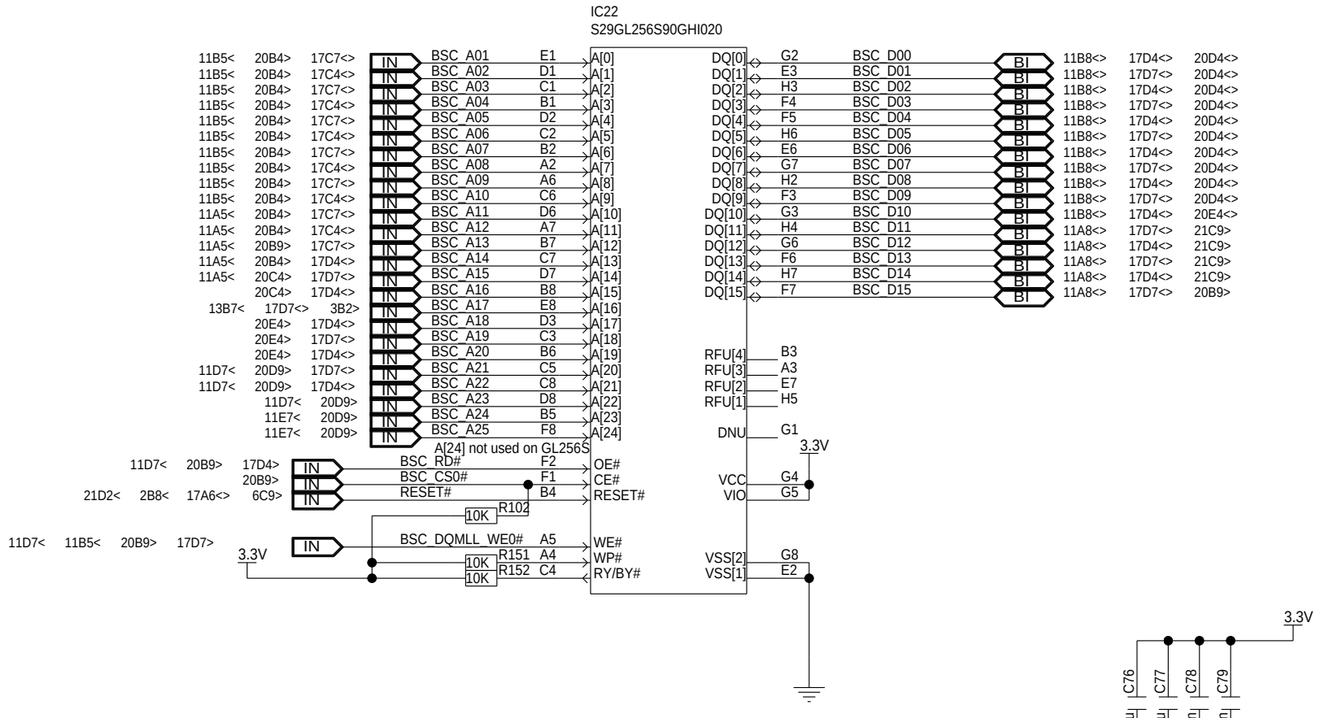

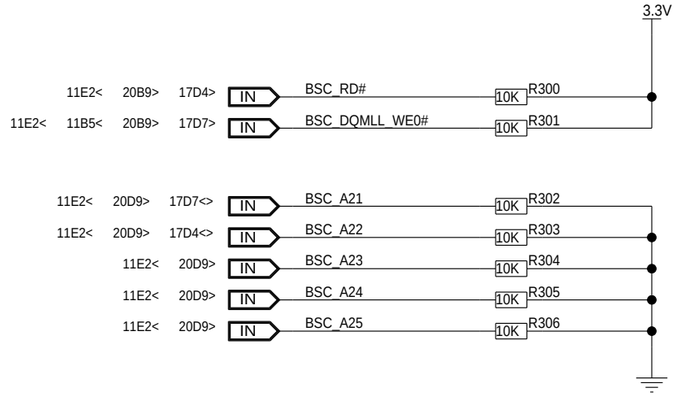

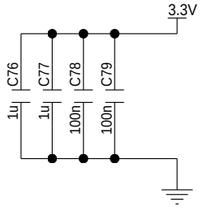

RENESAS Electronics Europe GmbH

Title: RSK+RZ/N2L
SDRAM and NOR Flash

Size	Document Number		
A3	D017892_04		
Date: Thu Sep 22 12:57:11 2022	PAGE 11 OF 21	ISSUE 3.2	

Octal SPI Flash: 64MB Octal SPI HyperRAM: 8MB

Quad SPI Flash: 64MB

OSPI FLASH

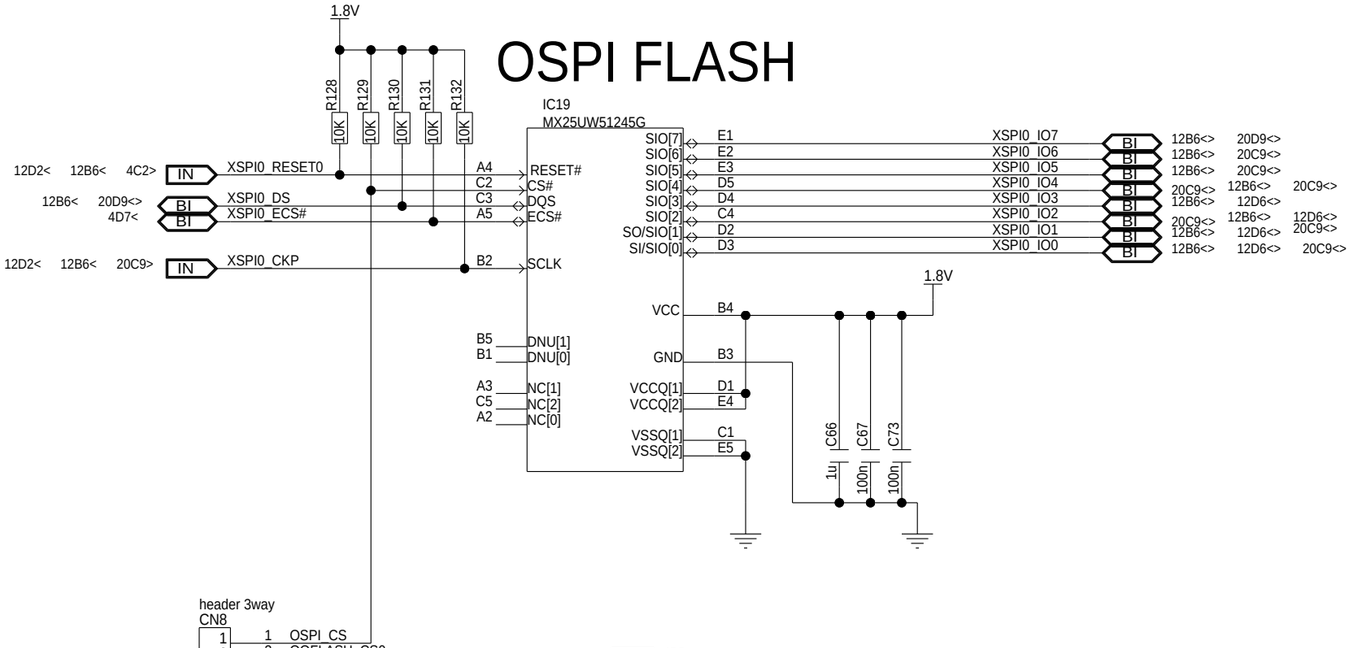

OSPI HyperRAM

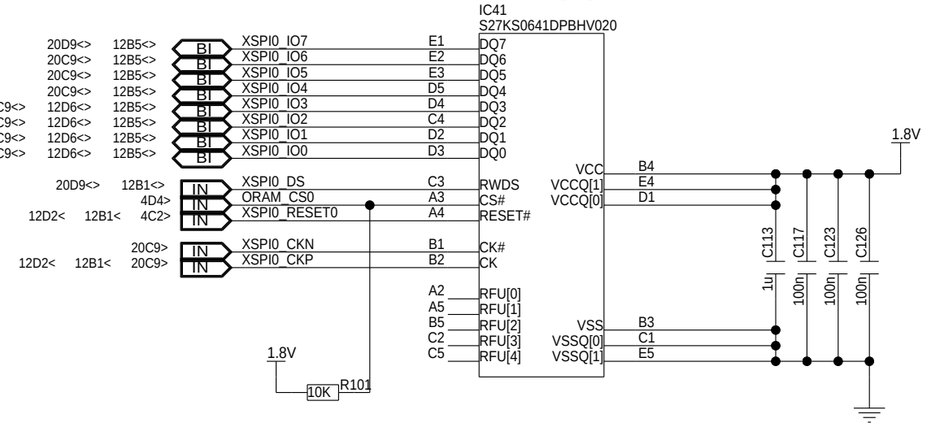

QSPI FLASH

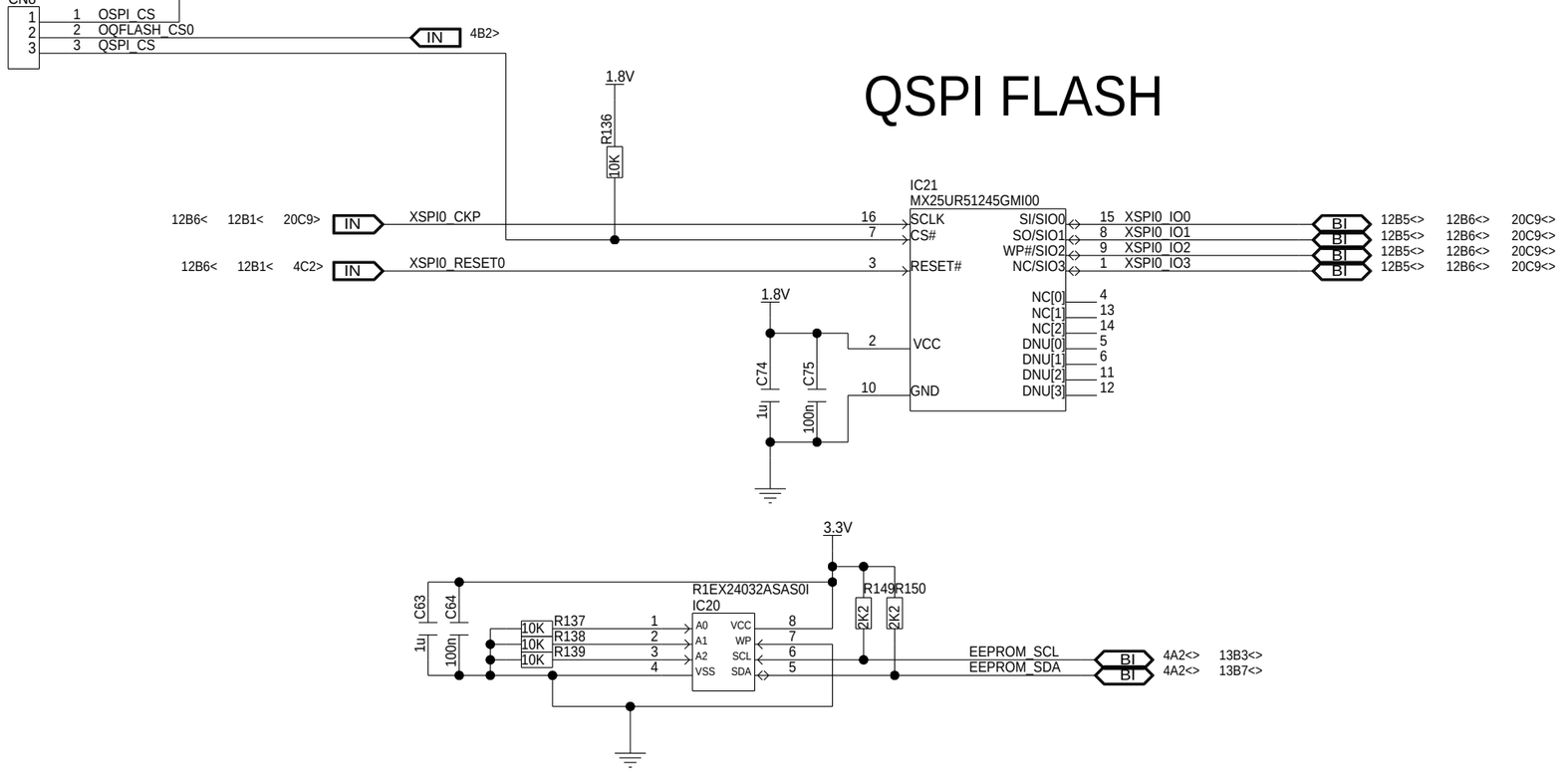

RENESAS Electronics Europe GmbH

Title: RSK+RZ/N2L
SPI Flash Memory

Size: A3 | Document Number: D017892_04

Date: Thu Sep 22 12:57:12 2022 | PAGE 12 OF 21 | ISSUE 3.2

PIN HEADERS

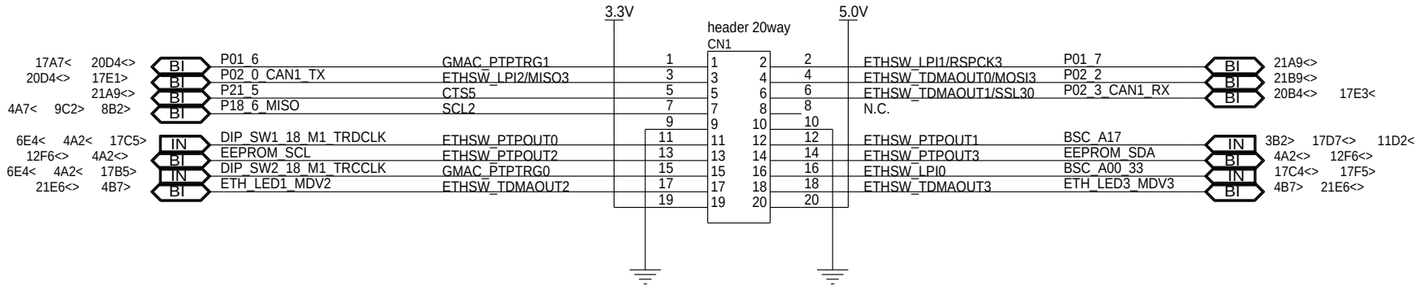

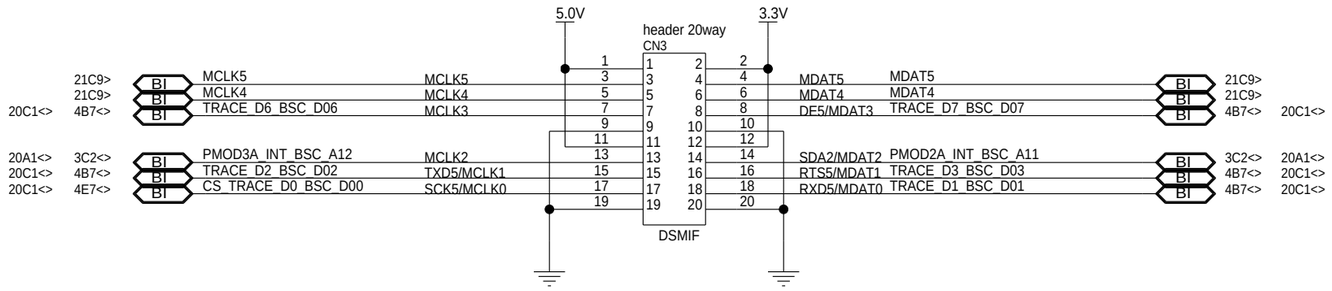

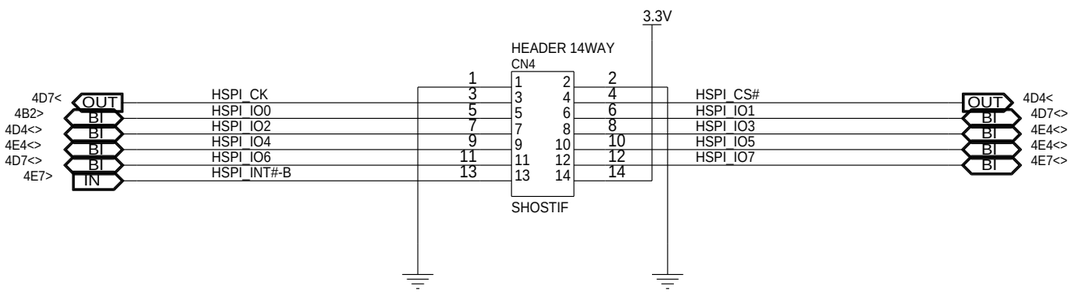

RENESAS Electronics Europe GmbH

Title: RSK+RZ/N2L
Pin Headers

Size	Document Number		
A3	D017892_04		
Date: Thu Sep 22 12:57:12 2022	PAGE 13 OF 21	ISSUE 3.2	

Ethernet

Some MDI polarities have been reversed for layout optimisation. You should connect as needed in your own designs

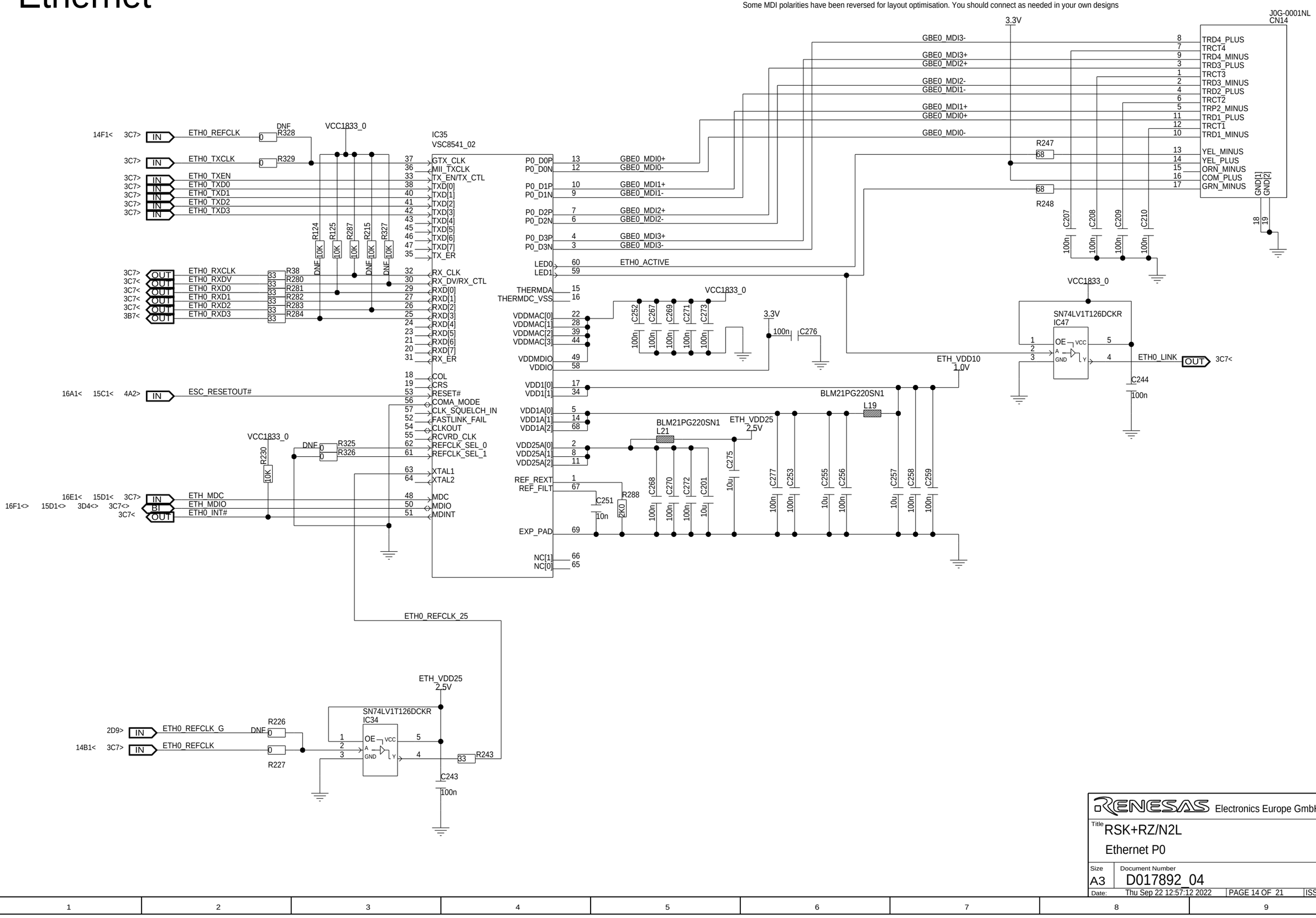

Title	RSK+RZ/N2L Ethernet P0		
Size	Document Number		
A3	D017892_04		
Date:	Thu Sep 22 12:57:12 2022	PAGE 14 OF 21	ISSUE 3.2

RENESAS Electronics Europe GmbH

Some MDI polarities have been reversed for layout optimisation. You should connect as needed in your own designs

IC31
VSC8541_02

J0G-0001NL
CN13

IC42
SN74LV1T126DCKR

IC30
SN74LV1T126DCKR

Some MDI polarities have been reversed for layout optimisation. You should connect as needed in your own designs

header 3way CN22
ESC_RESETOUT#
ESC_B_RESETOUT#
header 3way CN20
ETH_MDC
ETH2_MDC
header 3way CN21
ETH_MDIO
ETH2_MDIO
ETH2_INT#_BSC_WAIT#
ETH2_REFCLK
ETH2_TXCLK
ETH2_TXEN
ETH2_TXD0
ETH2_TXD1
ETH2_TXD2
ETH2_TXD3
ETH2_RXCLK
ETH2_RXDV
ETH2_RXD0
ETH2_RXD1
ETH2_RXD2
ETH2_RXD3
IC16
VSC8541_02
GTX_CLK
MII_TXCLK
TX_EN/TX_CTL
TXD[0]
TXD[1]
TXD[2]
TXD[3]
TXD[4]
TXD[5]
TXD[6]
TXD[7]
TX_ER
RX_CLK
RX_DV/RX_CTL
RXD[0]
RXD[1]
RXD[2]
RXD[3]
RXD[4]
RXD[5]
RXD[6]
RXD[7]
RX_ER
COL
CRS
RESET#
COMA_MODE
CLK_SQUELCH_IN
FASTLINK_FAIL
CLKOUT
RCVRD_CLK
REFCLK_SEL_0
REFCLK_SEL_1
XTAL1
XTAL2
MDC
MDIO
MDINT
P0_D0P
P0_D0N
P0_D1P
P0_D1N
P0_D2P
P0_D2N
P0_D3P
P0_D3N
LED0
LED1
THERMDA
THERMDC_VSS
VDDMAC[0]
VDDMAC[1]
VDDMAC[2]
VDDMAC[3]
VDDMDIO
VDDIO
VDD1[0]
VDD1[1]
VDD1A[0]
VDD1A[1]
VDD1A[2]
VDD25A[0]
VDD25A[1]
VDD25A[2]
REF_REXT
REF_FILT
EXP_PAD
NC[1]
NC[0]
GBE2_MDI0+
GBE2_MDI0-
GBE2_MDI1+
GBE2_MDI1-
GBE2_MDI2+
GBE2_MDI2-
GBE2_MDI3+
GBE2_MDI3-
ETH2_ACTIVE
J0G-0001NL
CN7
TRD4_PLUS
TRCT4
TRD4_MINUS
TRD3_PLUS
TRCT3
TRD3_MINUS
TRD2_PLUS
TRCT2
TRP2_MINUS
TRD1_PLUS
TRCT1
TRD1_MINUS
YEL_MINUS
YEL_PLUS
ORN_MINUS
COM_PLUS
GRN_MINUS
GND[1]
GND[2]
SN74LV1T126DCKR
IC5
IC11
ETH2_LINK
ETH2_REFCLK_G
ETH2_REFCLK
ETH2_REFCLK_25
VCC1833_2
3.3V
ETH_VDD10
1.0V
ETH_VDD25
2.5V
BLM21PG220SN1
L5
L6
R105
R106
R107
R108
R109
R110
R111
R112
R113
R114
R115
R116
R119
R120
R126
R127
R144
R147
R202
R265
R335
R336
R337
R338
R339
R341
C36
C40
C41
C42
C43
C44
C45
C46
C47
C48
C49
C50
C52
C53
C54
C58
C59
C60
C61
C62
C195
C196
C197
C198
C211
Electronics Europe GmbH
Title
RSK+RZ/N2L
Ethernet P2
Size
A3
Document Number
D017892_04
Date:
Thu Sep 22 12:57:13 2022
PAGE 16 OF 21
ISSUE 3.2

Application Headers

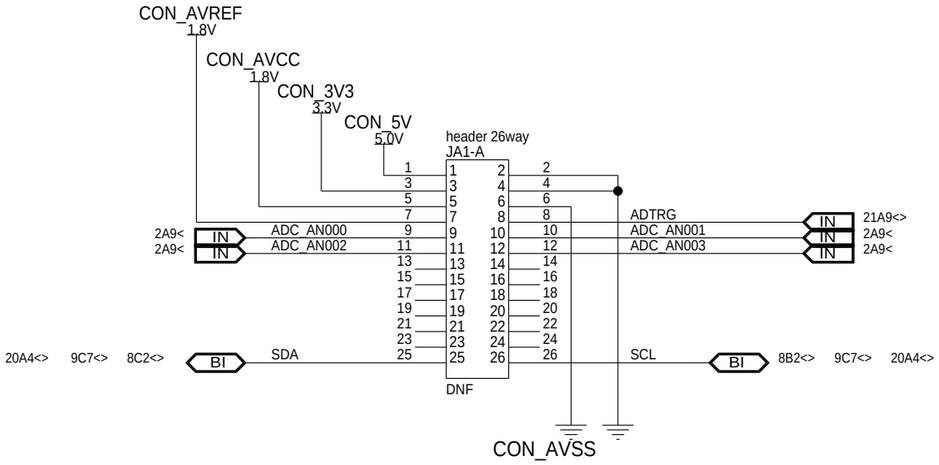

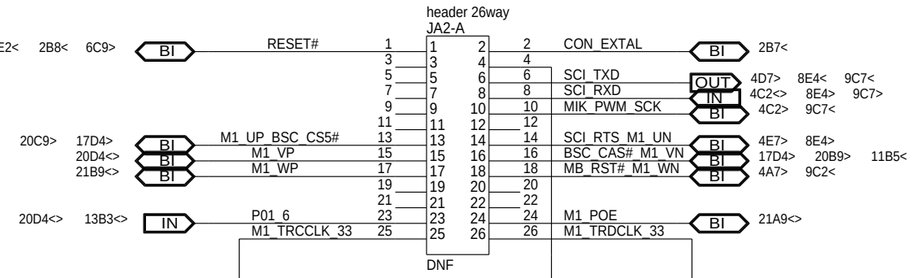

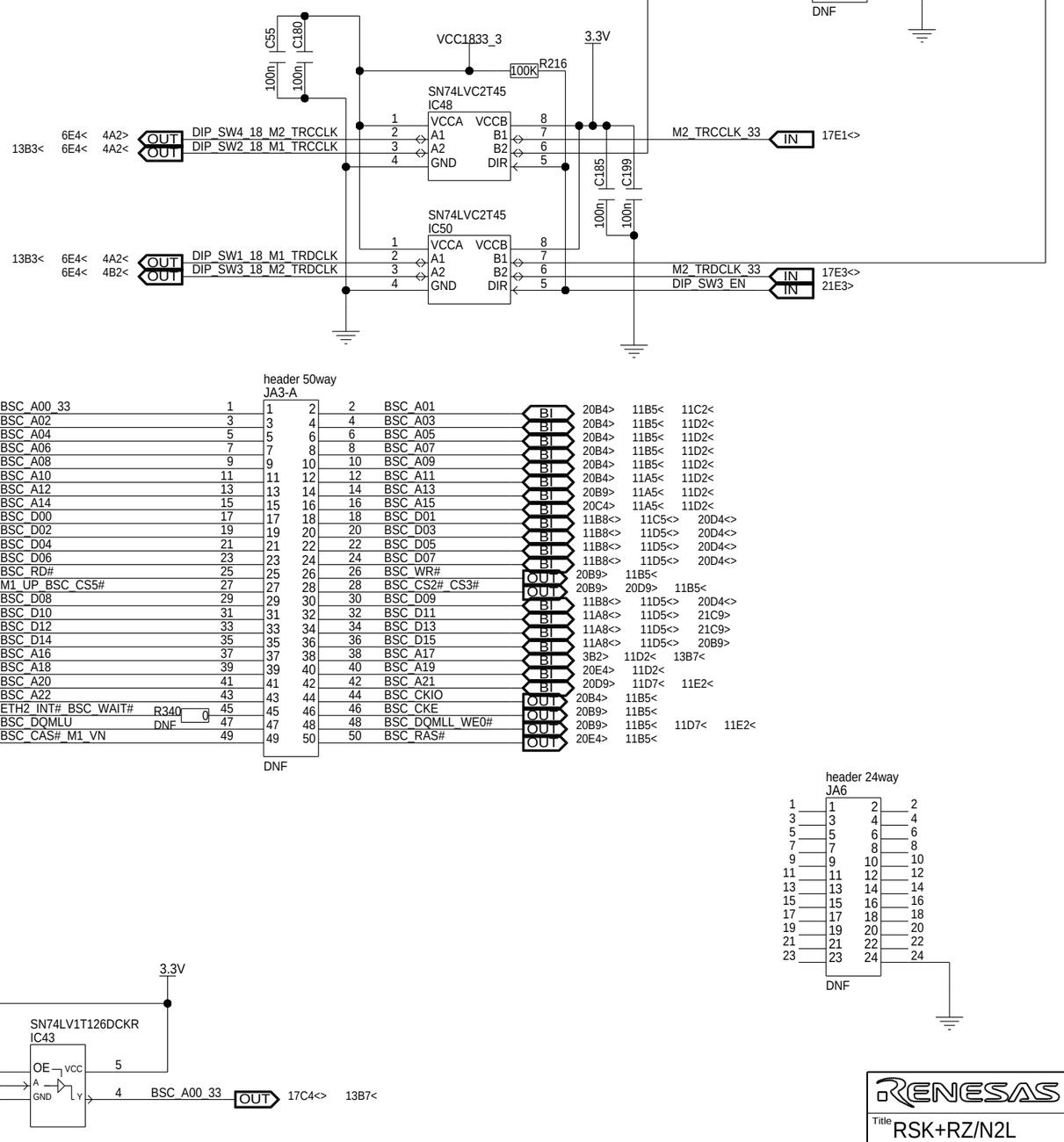

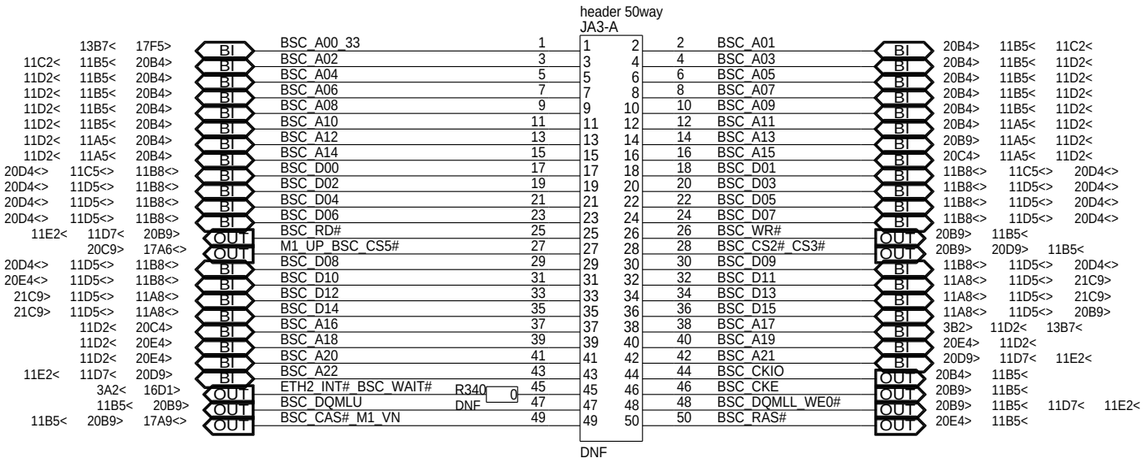

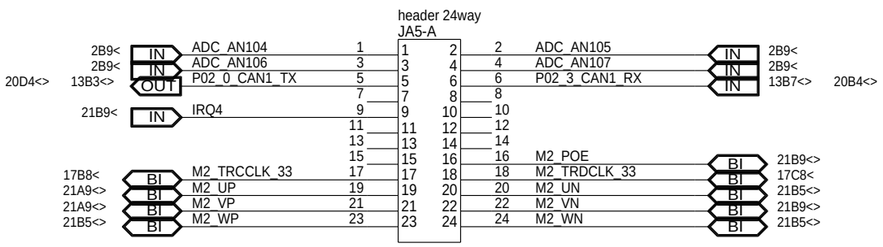

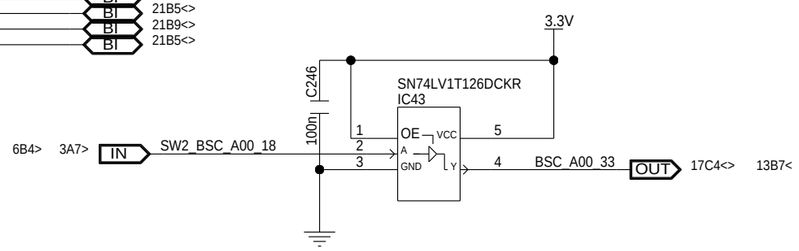

RENESAS Electronics Europe GmbH

Title: RSK+RZ/N2L
Application Headers

Size	Document Number		
A3	D017892_04		
Date: Thu Sep 22 12:57:14 2022	PAGE 17 OF 21	ISSUE 3.2	

CAN

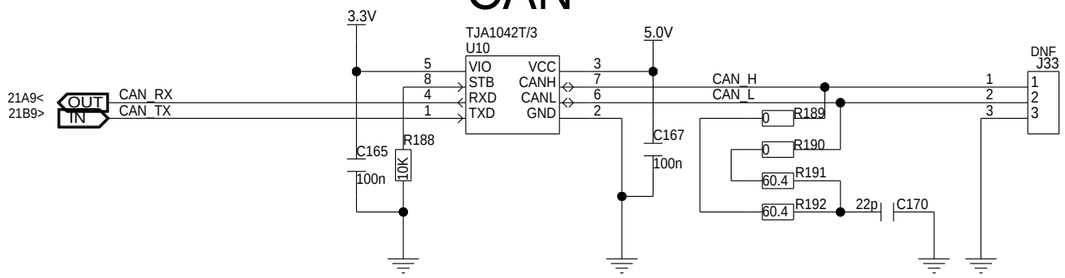

RS-485

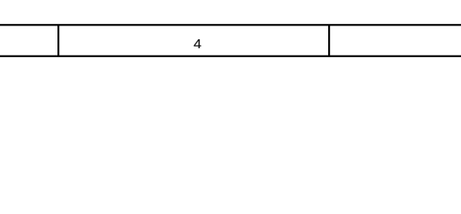

RS485

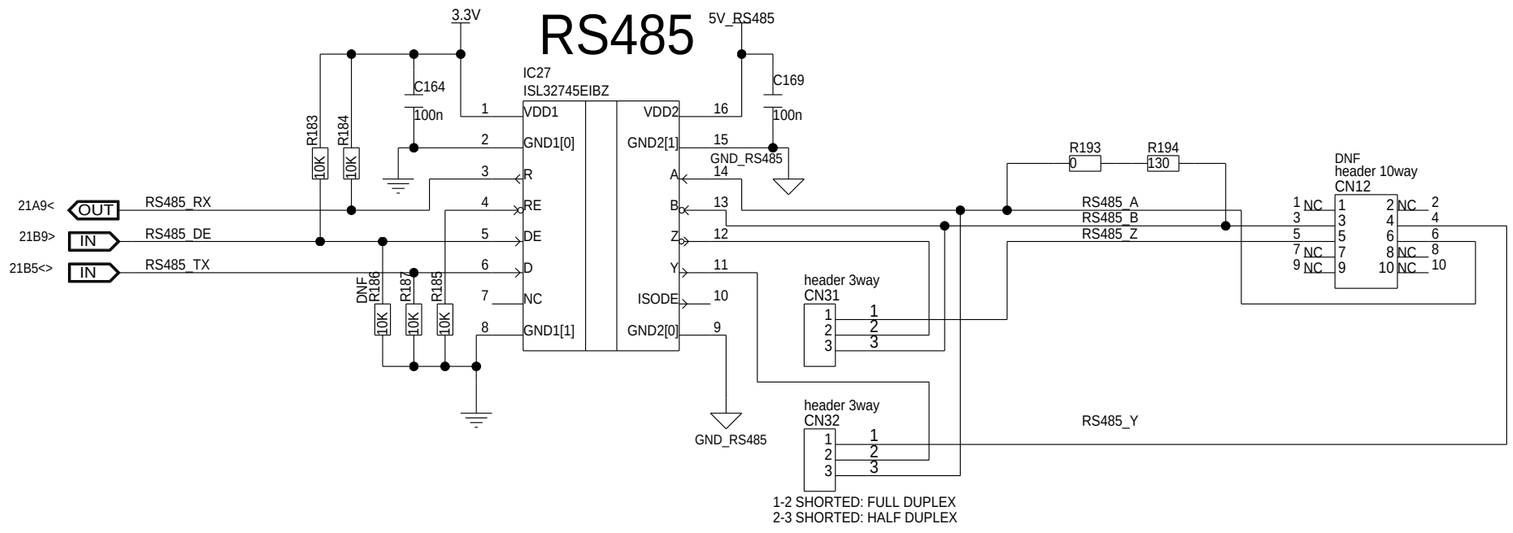

Electronics Europe GmbH	
Title	RSK+RZ/N2L CAN and RS485
Size	A3
Document Number	D017892_04
Date:	Thu Sep 22 12:57:14 2022
PAGE 18 OF 21	ISSUE 3.2

RL78G1C USB to Serial

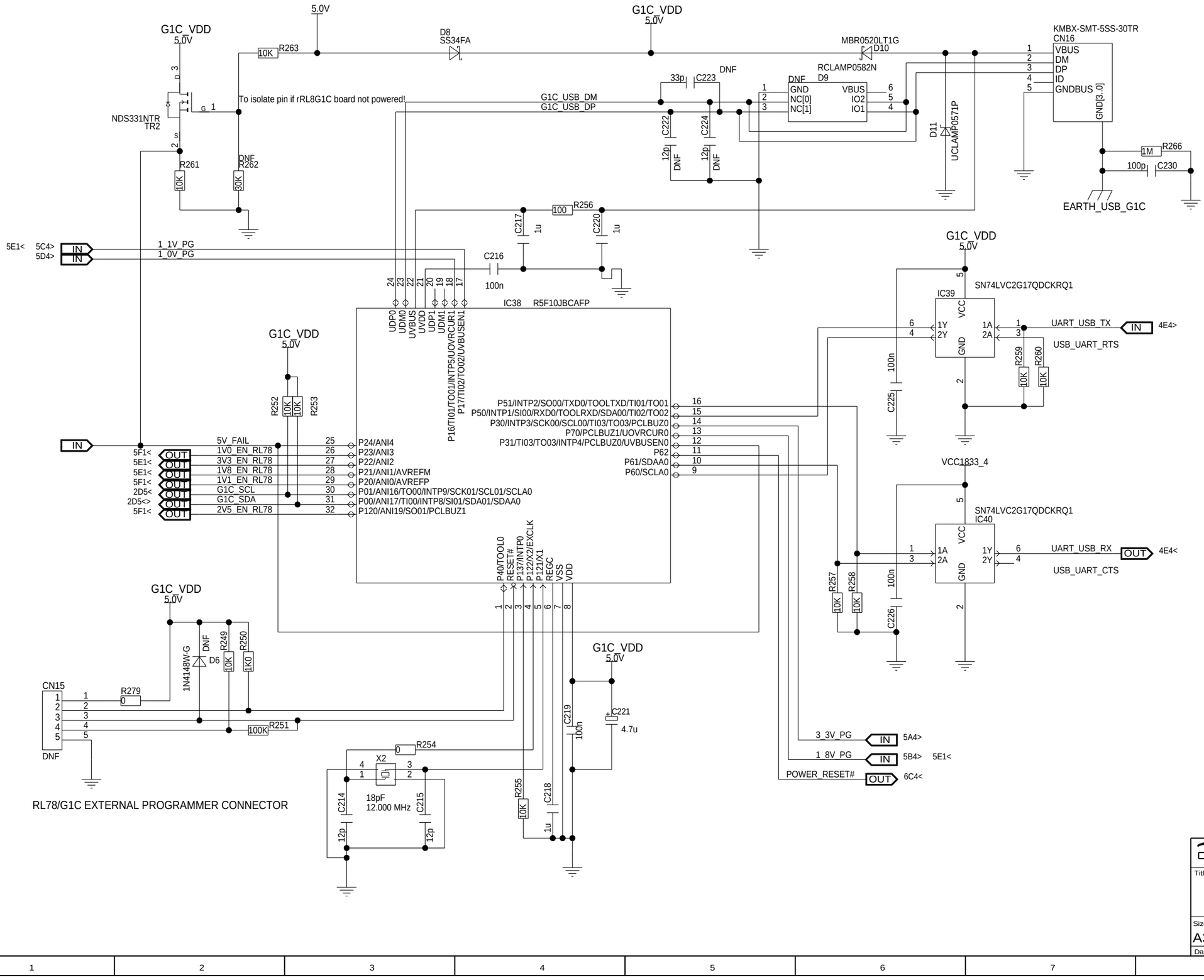

RL78/G1C EXTERNAL PROGRAMMER CONNECTOR

RENESAS Electronics Europe GmbH

Title	RSK+RZ/N2L USB to Serial
Size	A3
Document Number	D017892_04
Date:	Thu Sep 22 12:57:15 2022
	PAGE 19 OF 21
	ISSUE 3.2

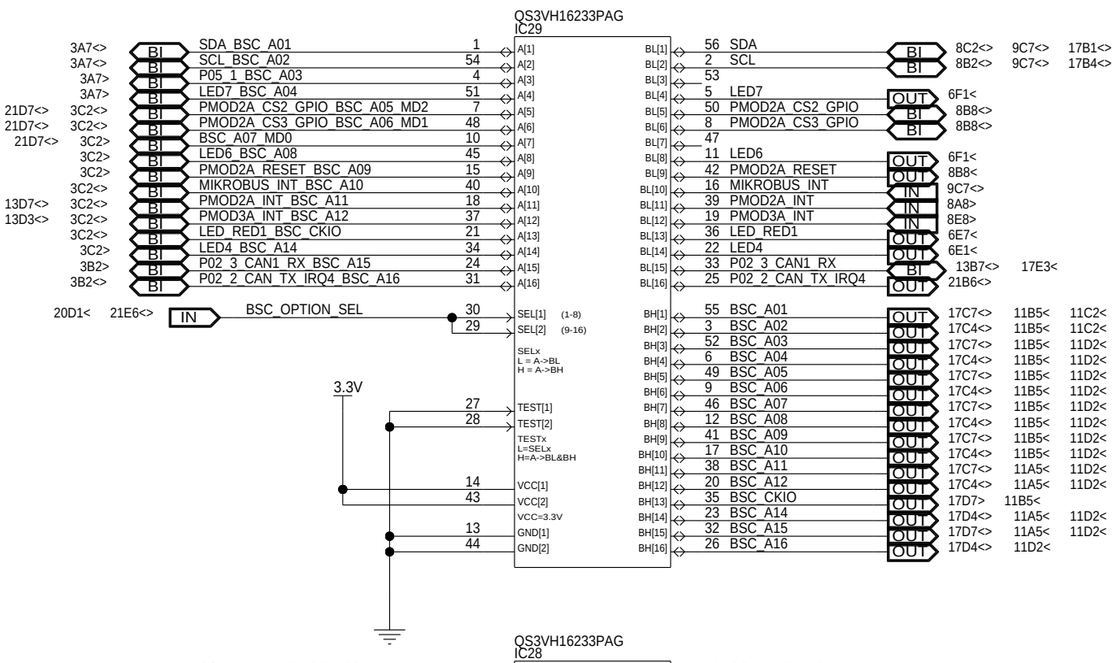

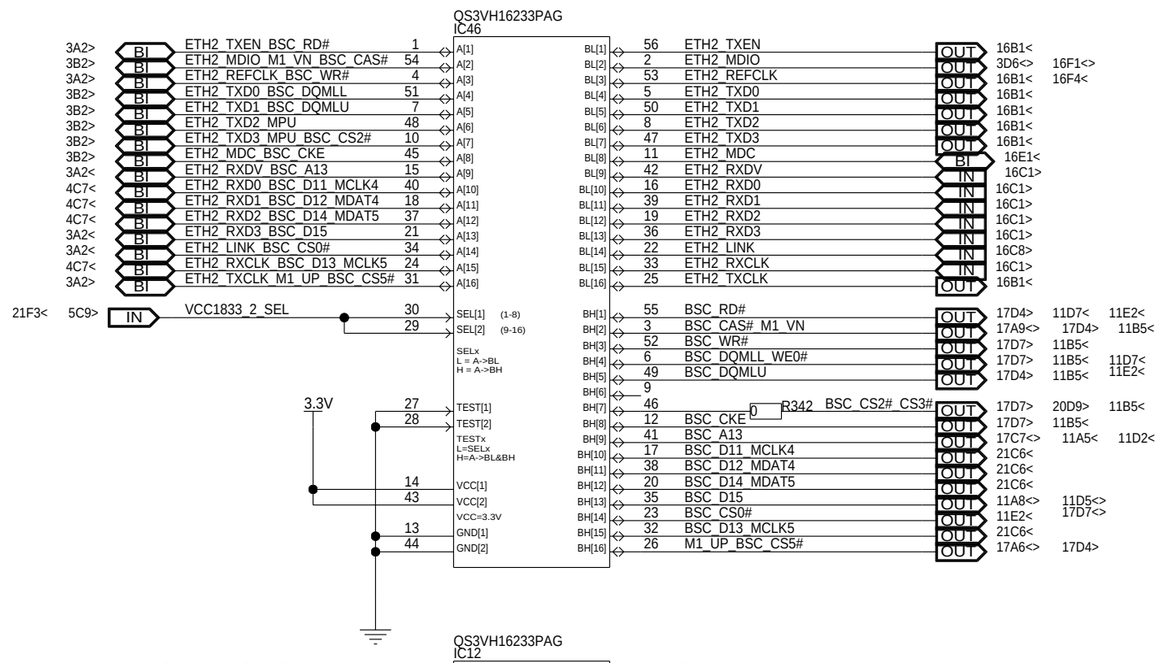

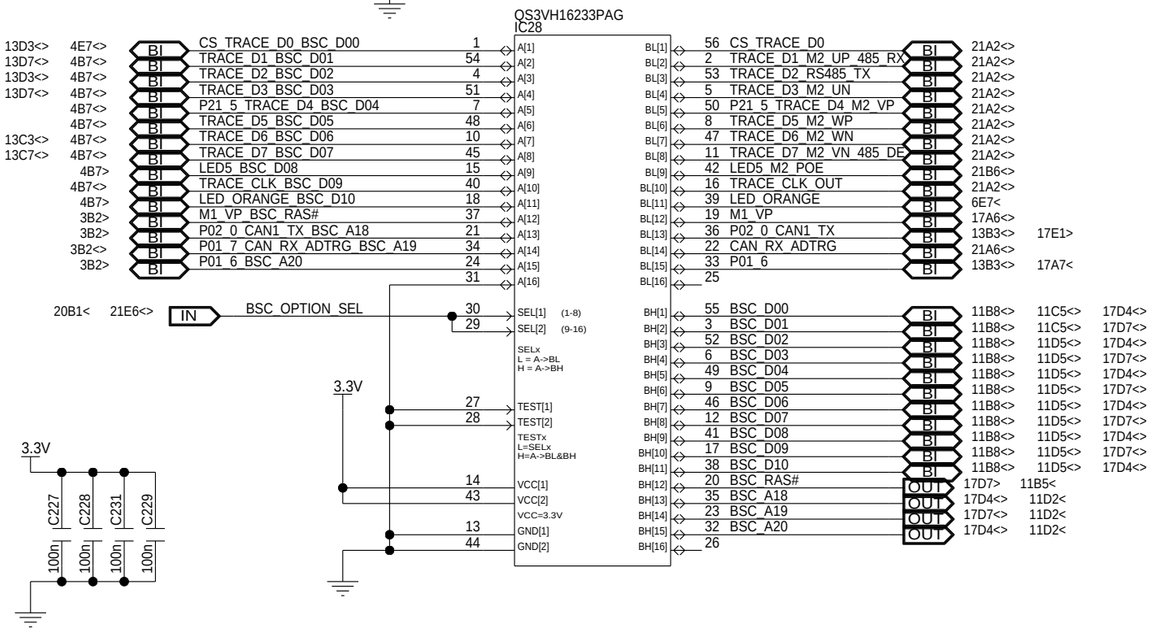

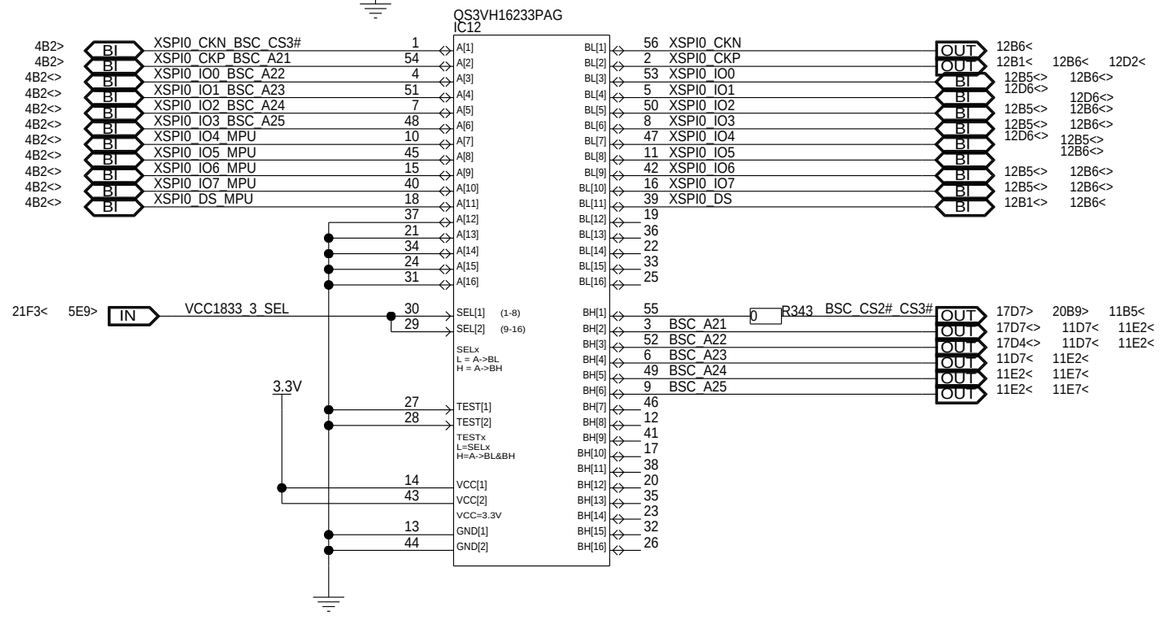

RENESAS Electronics Europe GmbH

Title: RSK+RZ/N2L
Option Settings

Size	Document Number		
A3	D017892_04		
Date: Thu Sep 22 12:57:15 2022	PAGE 20 OF 21	ISSUE 3.2	

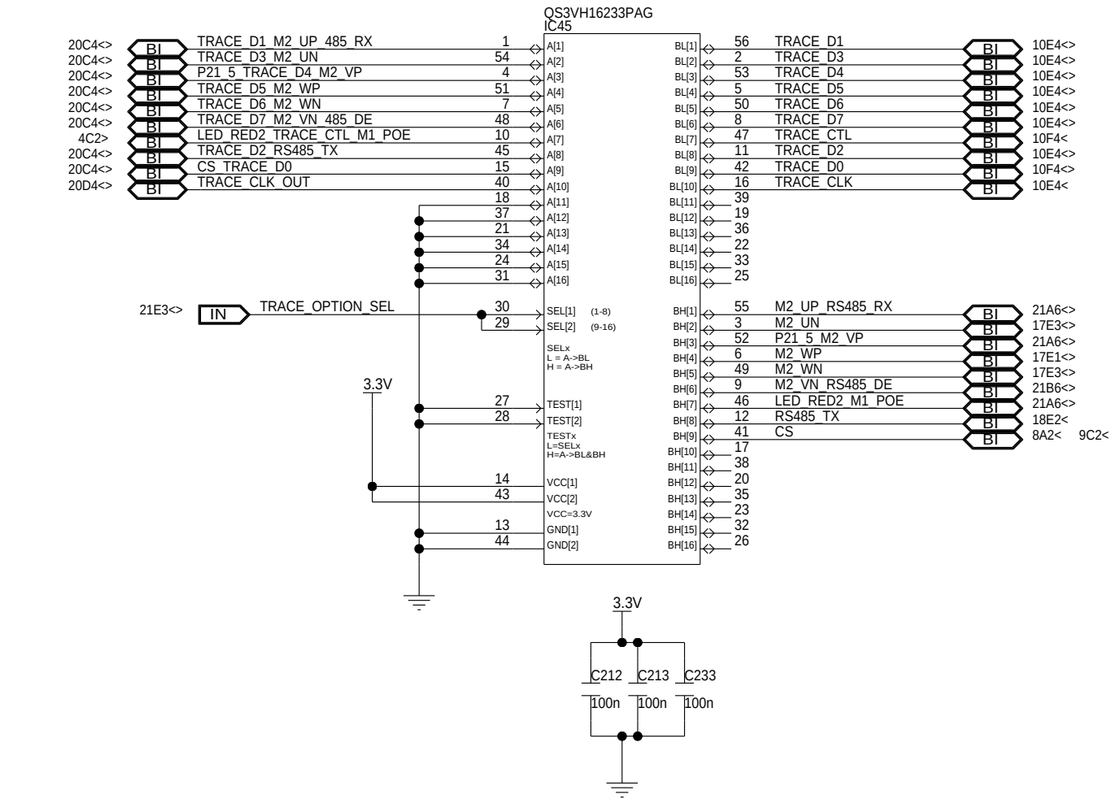

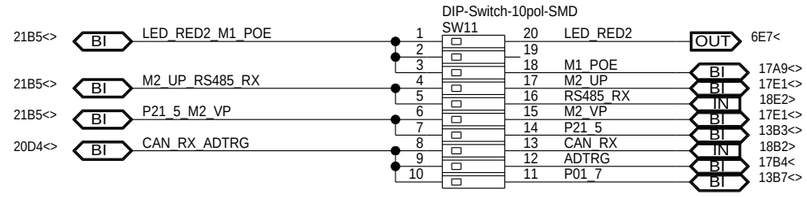

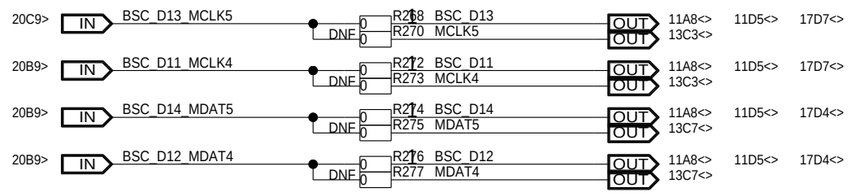

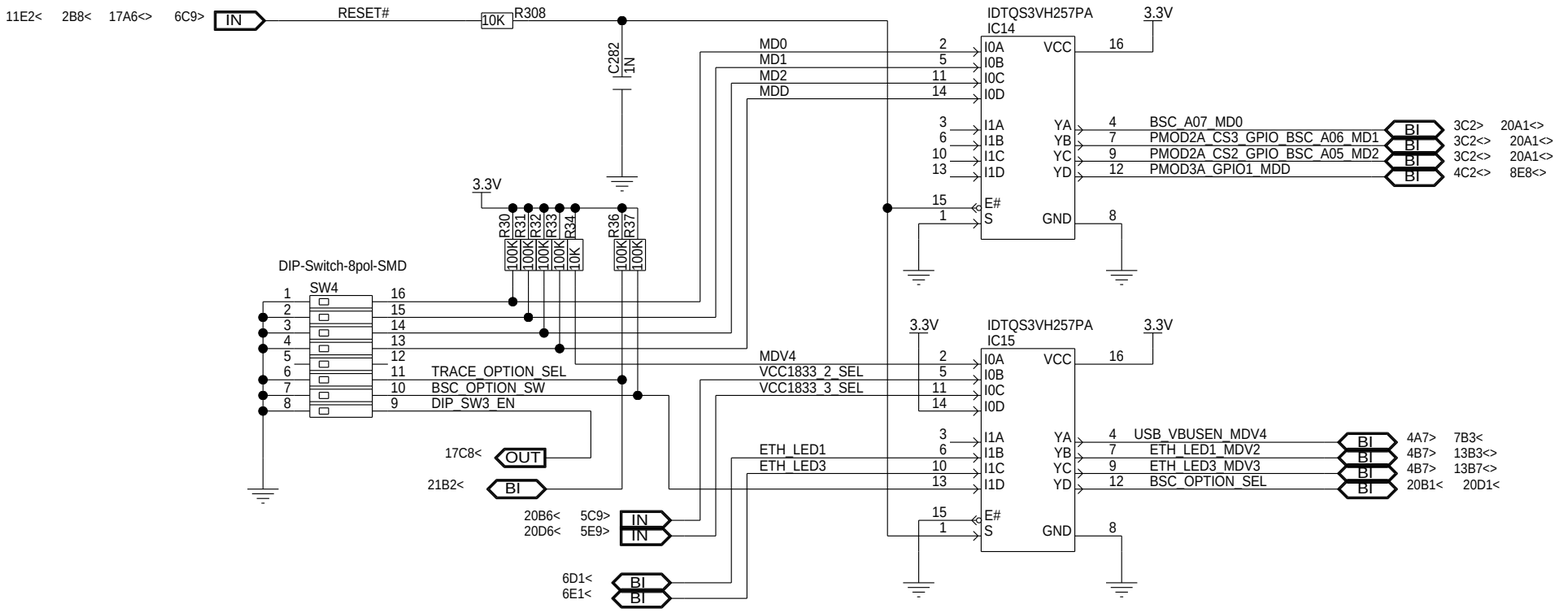

RENESAS Electronics Europe GmbH

Title: RSK+RZ/N2L
Option Settings B

Size	Document Number		
A3	D017892_04		
Date: Thu Sep 22 12:57:15 2022	PAGE 21 OF 21	ISSUE 3.2	