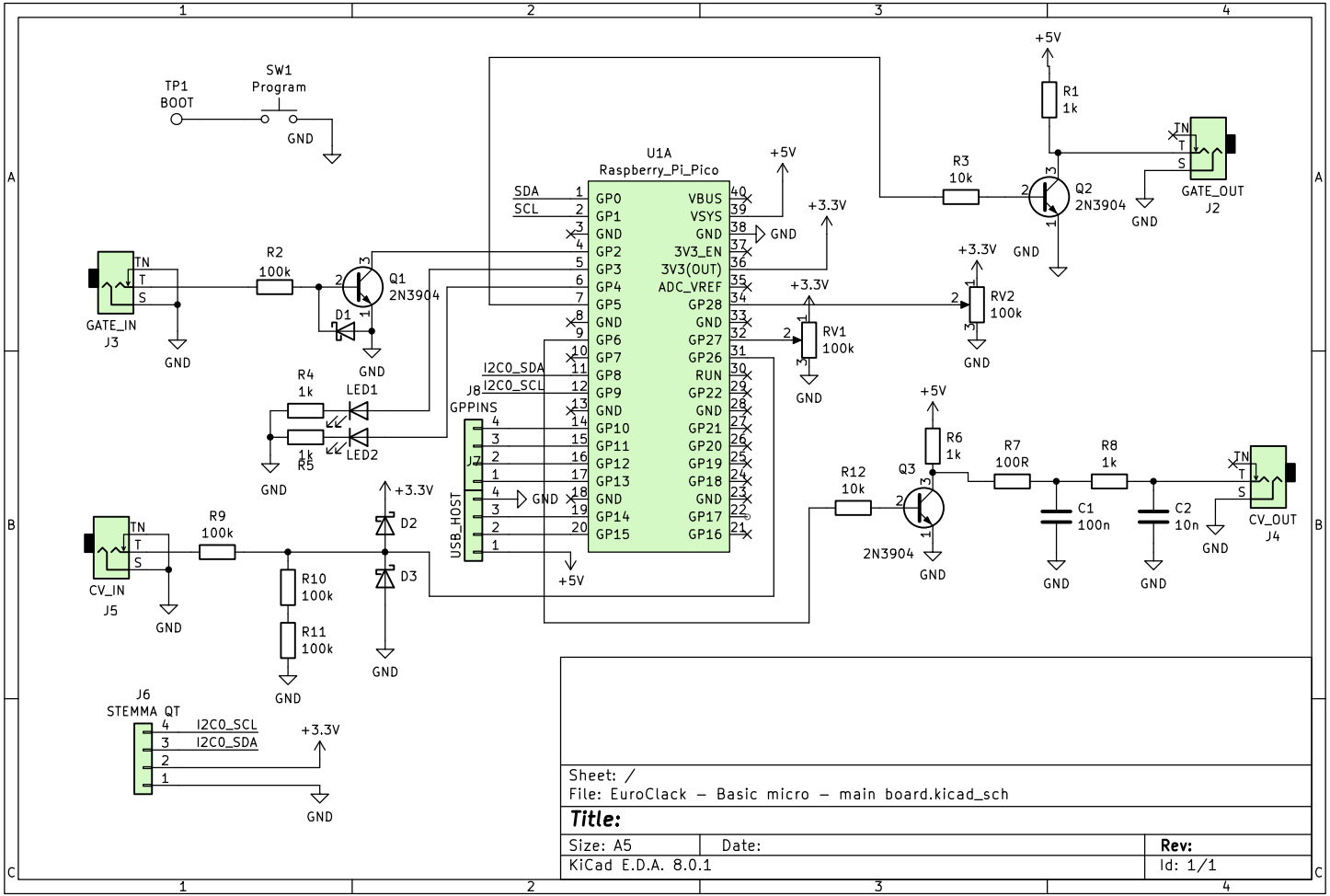
TP1
BOOT
SW1
Program
GND
U1A
Raspberry_Pi_Pico
SDA
SCL
GP0
GP1
GND
GP2
GP3
GP4
GP5
GND
GP6
GP7
GP8
GP9
GND
GP10
GP11
GP12
GP13
GND
GP14
GP15
VBUS
VSYS
GND
3V3_EN
3V3(OUT)
ADC_VREF
GP28
GND
GP27
GP26
RUN
GP22
GND
GP21
GP20
GP19
GP18
GND
GP17
GP16
+5V
+3.3V
GND
I2C0_SDA
I2C0_SCL
J8
GPPINS
J7
USB_HOST
GATE_IN
J3
R2
100k
Q1
2N3904
D1
R4
1k
LED1
R5
1k
LED2
CV_IN
J5
R9
100k
R10
100k
R11
100k
D2
D3
J6
STEMMA QT
R1
1k
R3
10k
Q2
2N3904
GATE_OUT
J2
RV1
100k
RV2
100k
R6
1k
Q3
2N3904
R12
10k
R7
100R
R8
1k
C1
100n
C2
10n
CV_OUT
J4
Sheet: /
File: EuroClack – Basic micro – main board.kicad_sch
Title:
Size: A5
Date:
Rev:
KiCad E.D.A. 8.0.1
Id: 1/1