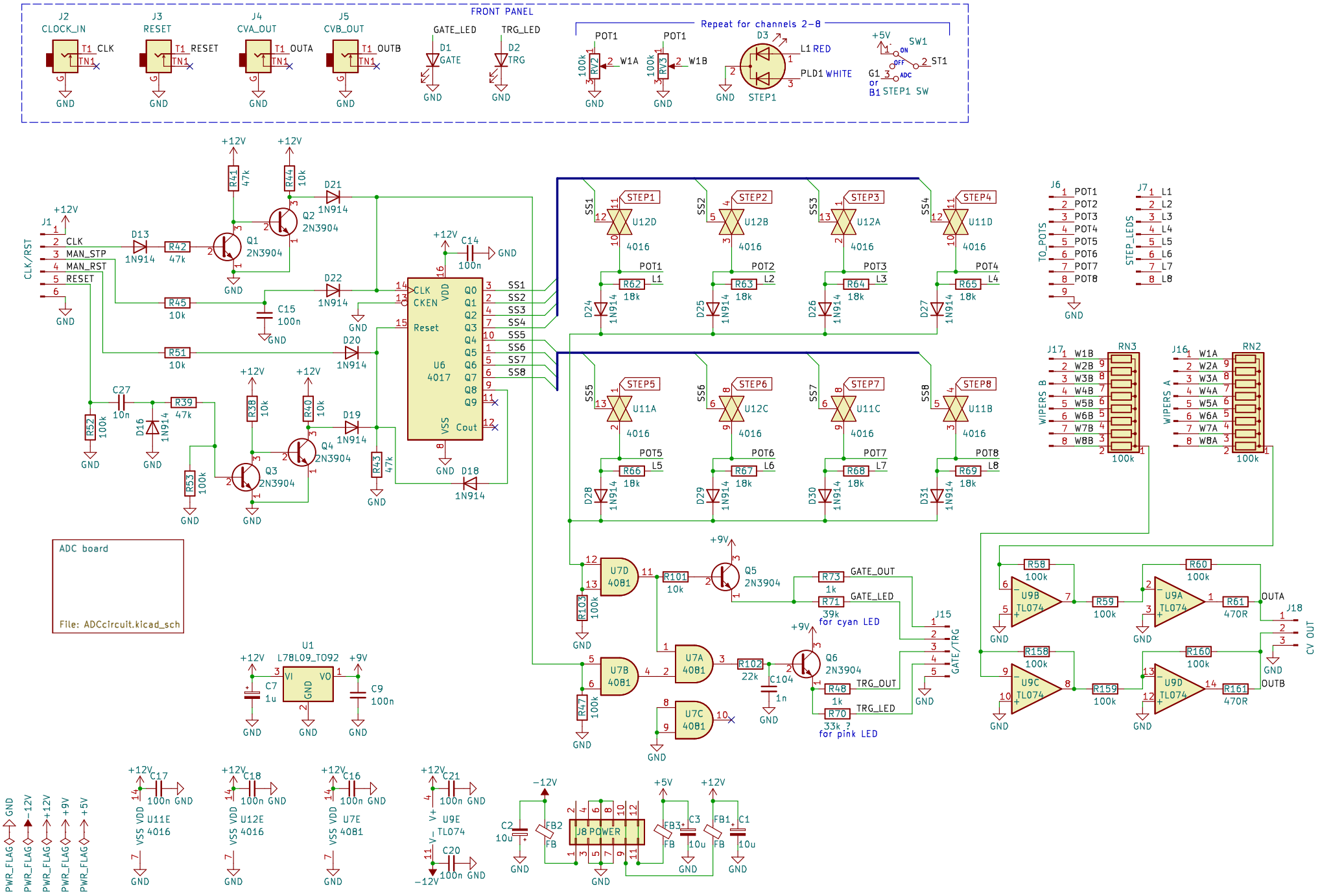
FRONT PANEL
J2 CLOCK_IN
J3 RESET
J4 CVA_OUT
J5 CVB_OUT
GATE_LED
TRG_LED
Repeat for channels 2–8
POT1
W1A
W1B
L1 RED
PLD1 WHITE
STEP1
SW1
ST1
G1 or B1 STEP1 SW
CLK/RST
CLK
MAN_STP
MAN_RST
RESET
U6 4017
CLK
CKEN
Reset
VDD
VSS
Cout
Q0
Q1
Q2
Q3
Q4
Q5
Q6
Q7
Q8
Q9
SS1
SS2
SS3
SS4
SS5
SS6
SS7
SS8
STEP1
STEP2
STEP3
STEP4
STEP5
STEP6
STEP7
STEP8
U12D
U12B
U12A
U11D
U11A
U12C
U11C
U11B
4016
POT1
POT2
POT3
POT4
POT5
POT6
POT7
POT8
L1
L2
L3
L4
L5
L6
L7
L8
TO_POTS
STEP_LEDS
WIPERS B
WIPERS A
RN3
RN2
100k
ADC board
File: ADCcircuit.kicad_sch
U1
L78L09_TO92
U7D 4081
U7B 4081
U7A 4081
U7C 4081
Q5 2N3904
Q6 2N3904
GATE_OUT
GATE_LED
for cyan LED
TRG_OUT
TRG_LED
for pink LED
GATE/TRG
U9B TL074
U9A TL074
U9C TL074
U9D TL074
OUTA
OUTB
CV OUT
U11E 4016
U12E 4016
U7E 4081
U9E TL074
J8 POWER
PWR_FLAG
GND
+12V
-12V
+9V
+5V

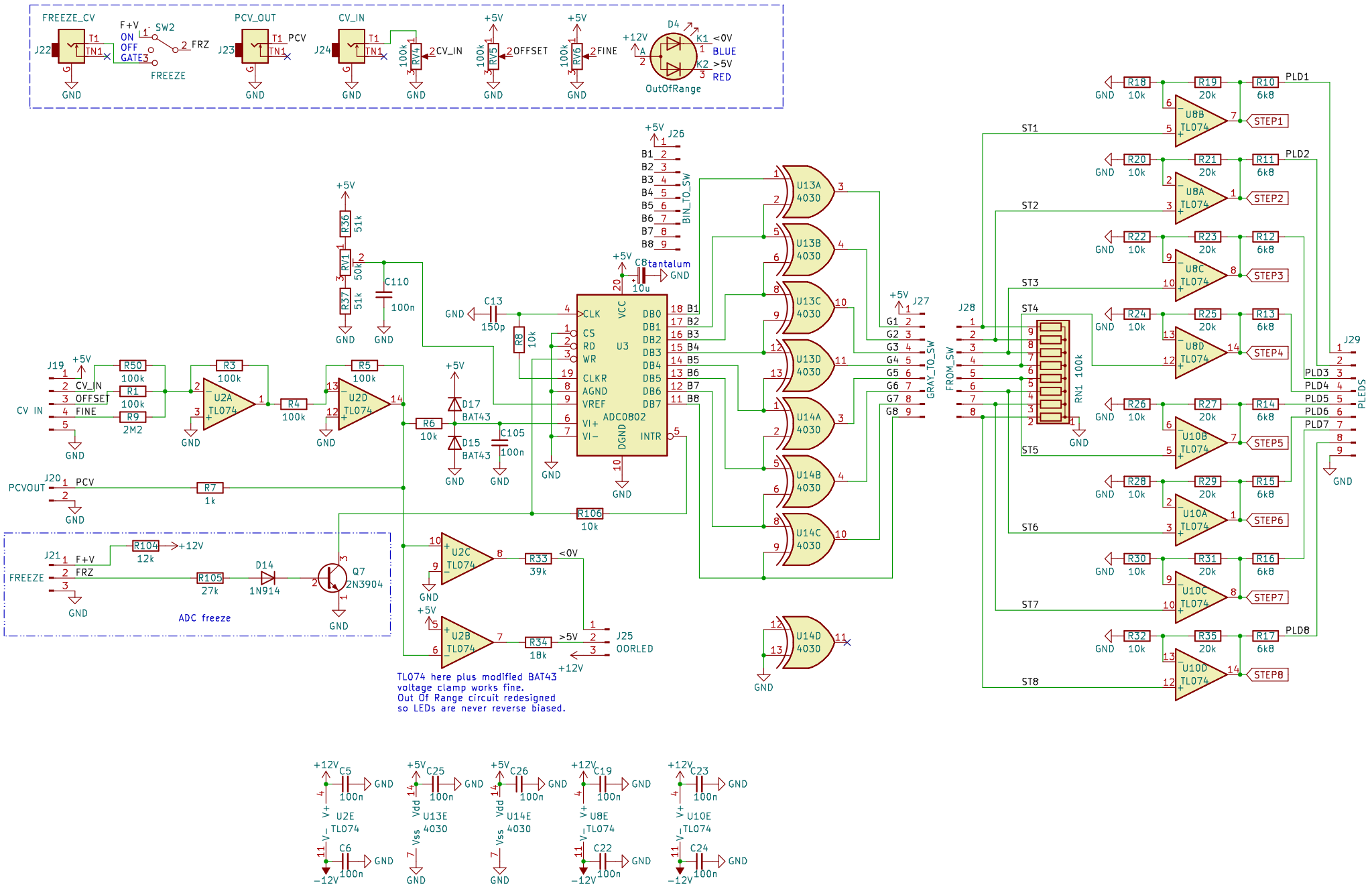
FREEZE_CV
J22
T1
TN1
GND
F+V
ON
OFF
GATE
SW2
FRZ
FREEZE
PCV_OUT
J23
PCV
CV_IN
J24
100k
RV4
CV_IN
+5V
RV5
OFFSET
RV6
FINE
+12V
D4
K1
<0V
BLUE
K2
>5V
RED
OutOfRange
J26
B1
B2
B3
B4
B5
B6
B7
B8
BIN_TO_SW
C8
tantalum
10u
R36
51k
RV1
50k
R37
51k
C110
100n
C13
150p
R8
10k
CLK
CS
RD
WR
CLKR
AGND
VREF
VI+
VI−
VCC
DGND
INTR
DB0
DB1
DB2
DB3
DB4
DB5
DB6
DB7
U3
ADC0802
J27
G1
G2
G3
G4
G5
G6
G7
G8
GRAY_TO_SW
U13A
U13B
U13C
U13D
U14A
U14B
U14C
4030
U14D
J19
CV IN
OFFSET
FINE
R50
100k
R1
100k
R9
2M2
R3
100k
U2A
TL074
R4
100k
R5
100k
U2D
R6
10k
D17
BAT43
D15
BAT43
C105
100n
J20
PCVOUT
PCV
R7
1k
R106
10k
J21
F+V
FREEZE
FRZ
R104
12k
R105
27k
D14
1N914
Q7
2N3904
ADC freeze
U2C
R33
39k
<0V
U2B
R34
18k
>5V
J25
OORLED
TL074 here plus modified BAT43
voltage clamp works fine.
Out Of Range circuit redesigned
so LEDs are never reverse biased.
J28
FROM_SW
RN1
100k
ST1
ST2
ST3
ST4
ST5
ST6
ST7
ST8
R18
10k
R19
20k
R10
6k8
PLD1
U8B
STEP1
R20
10k
R21
20k
R11
6k8
PLD2
U8A
STEP2
R22
10k
R23
20k
R12
6k8
U8C
STEP3
R24
10k
R25
20k
R13
6k8
U8D
STEP4
R26
10k
R27
20k
R14
6k8
U10B
STEP5
R28
10k
R29
20k
R15
6k8
U10A
STEP6
R30
10k
R31
20k
R16
6k8
U10C
STEP7
R32
10k
R35
20k
R17
6k8
PLD8
U10D
STEP8
J29
PLD3
PLD4
PLD5
PLD6
PLD7
PLEDS
C5
C25
C26
C19
C23
100n
U2E
U13E
U14E
U8E
U10E
TL074
4030
Vdd
Vss
C6
C22
C24
−12V