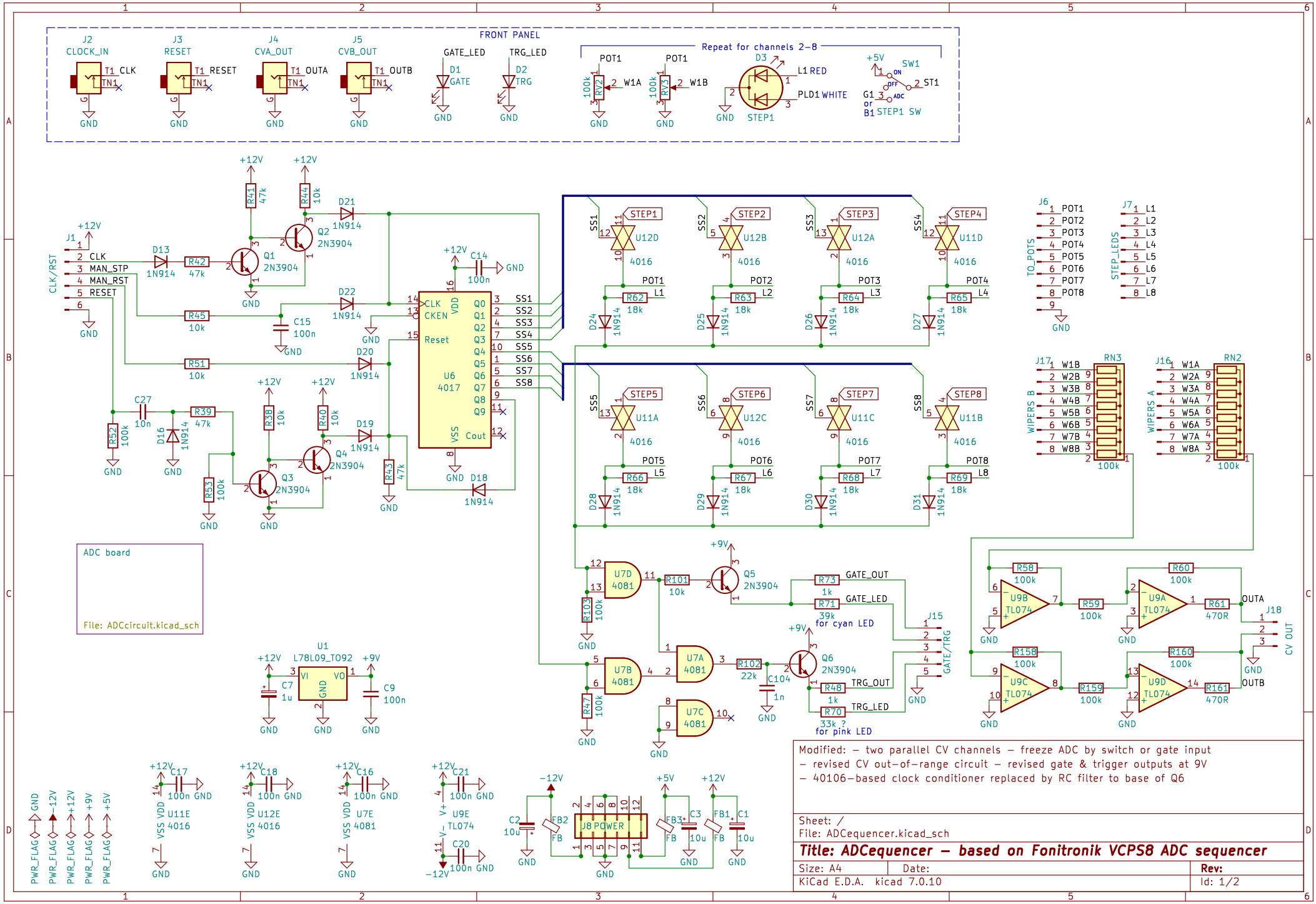
FRONT PANEL
J2 CLOCK_IN
J3 RESET
J4 CVA_OUT
J5 CVB_OUT
GATE_LED
TRG_LED
Repeat for channels 2–8
POT1
W1A
W1B
L1 RED
PLD1 WHITE
STEP1
SW1
ST1
G1 or B1 STEP1 SW
CLK/RST
CLK
MAN_STP
MAN_RST
RESET
U6 4017
U1 L78L09_TO92
ADC board
File: ADCcircuit.kicad_sch
TO_POTS
STEP_LEDS
WIPERS B
WIPERS A
GATE_OUT
GATE_LED
for cyan LED
TRG_OUT
TRG_LED
for pink LED
GATE/TRG
CV OUT
OUTA
OUTB
J8 POWER
PWR_FLAG
Modified: – two parallel CV channels – freeze ADC by switch or gate input
– revised CV out-of-range circuit – revised gate & trigger outputs at 9V
– 40106-based clock conditioner replaced by RC filter to base of Q6
Sheet: /
File: ADCequencer.kicad_sch
Title: ADCequencer – based on Fonitronik VCPS8 ADC sequencer
Size: A4
Date:
Rev:
KiCad E.D.A. kicad 7.0.10
Id: 1/2

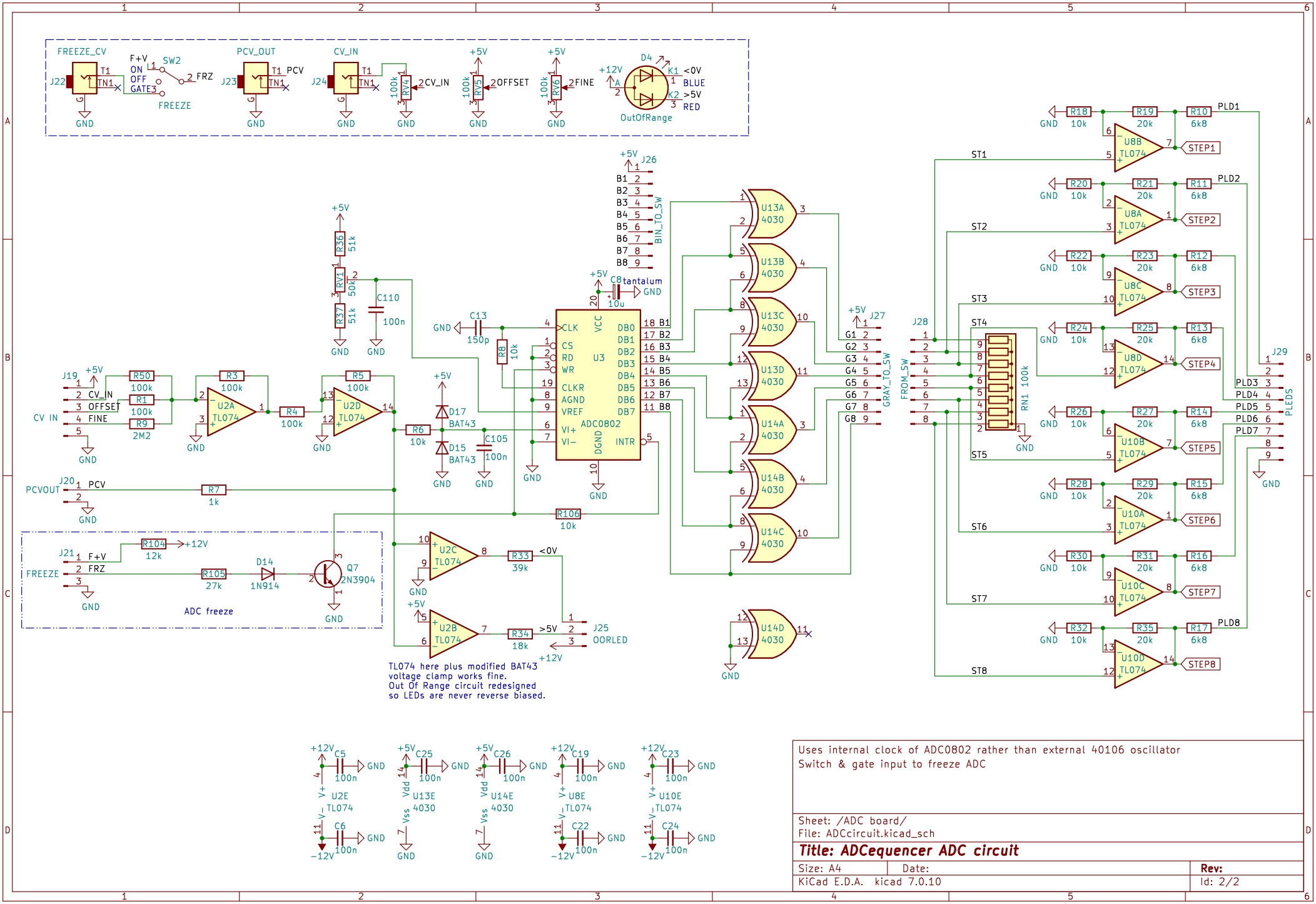

Uses internal clock of ADC0802 rather than external 40106 oscillator
Switch & gate input to freeze ADC

Sheet: /ADC board/
File: ADCcircuit.kicad_sch

Title: ADCequencer ADC circuit

Size: A4	Date:	Rev:
KiCad E.D.A. kicad 7.0.10		Id: 2/2