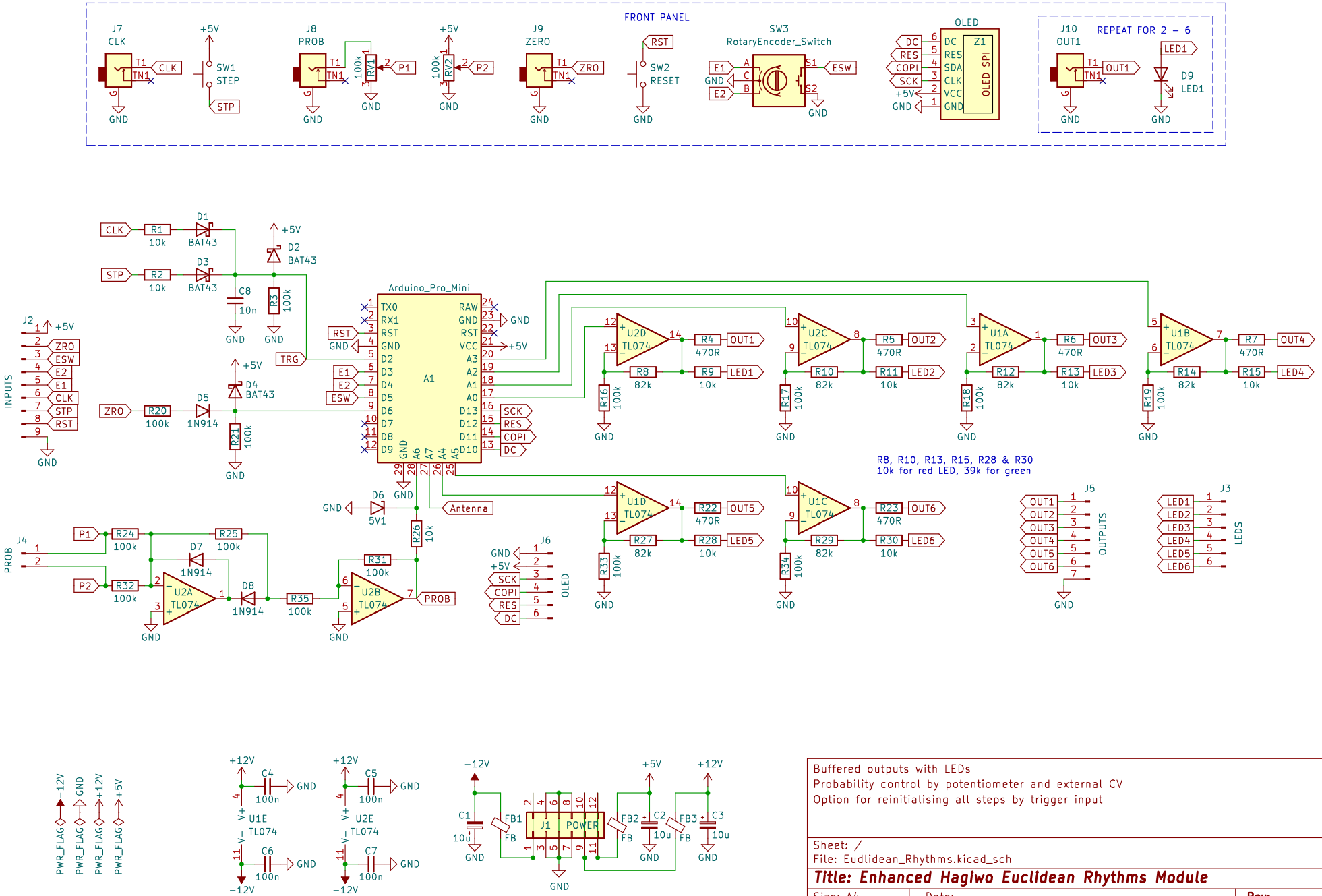

Buffered outputs with LEDs
Probability control by potentiometer and external CV
Option for reinitialising all steps by trigger input

Sheet: /
File: Eudlidean_Rhythms.kicad_sch

Title: Enhanced Hagiwo Euclidean Rhythms Module

Size: A4	Date:	Rev:
KiCad E.D.A. kicad 7.0.10		Id: 1/1