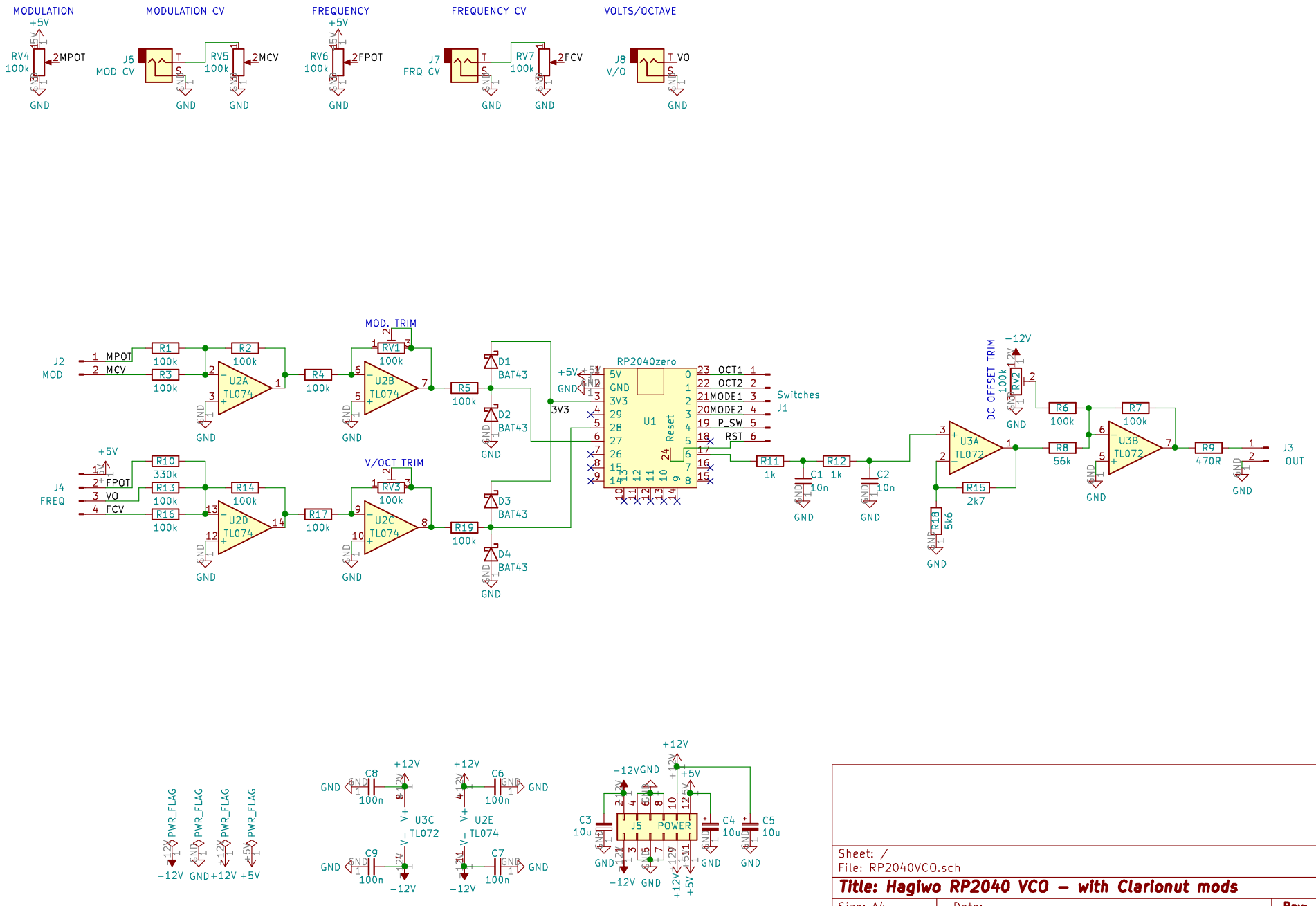

Sheet: /
File: RP2040VCO.sch

Title: Hagiwo RP2040 VCO – with Clarionut mods

Size: A4	Date:	Rev:
KiCad E.D.A. kicad 5.1.12-84ad8e8a8692ubuntu18.04.1		Id: 1/1