CREDO SC50GZN

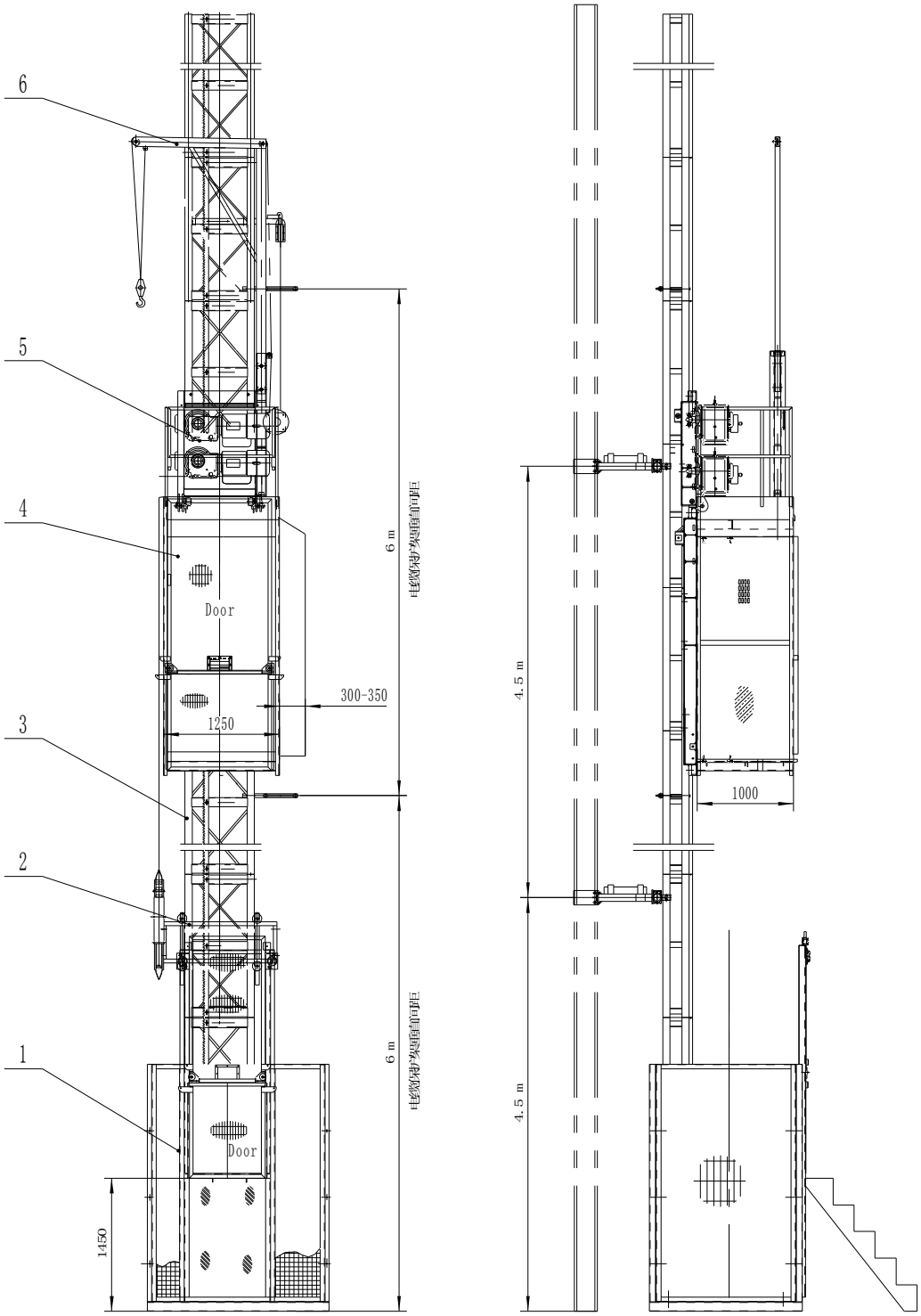

1. Enclosure, 2. Cable wheel, 3. Mast, 4. Cage, 5. Machinery, 6. Derrick

SUN JUPITER

Sun Jupiter Co.,Ltd.
2/2 Moo.3 Or-Ngurn Saimai Bangkok 10220
Tel: 0062-9983855 , 0062-9983655
Fax: 0062-9983466

www.sunjupiter.co.th

Enclosure and Foundation

Enclosure equipment

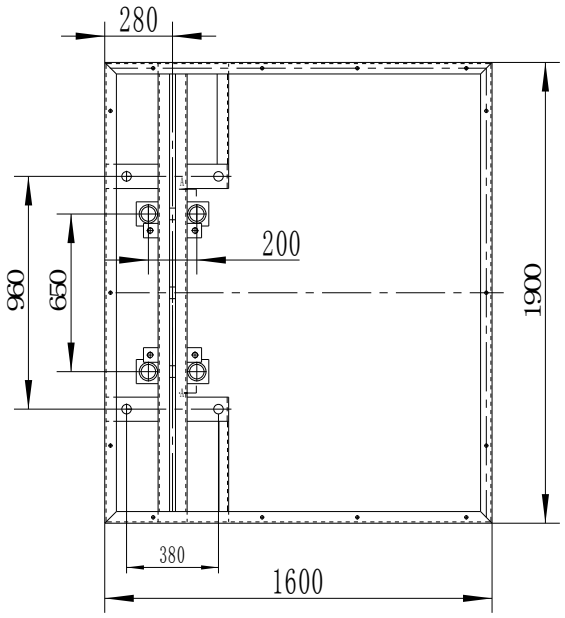

Tie-in

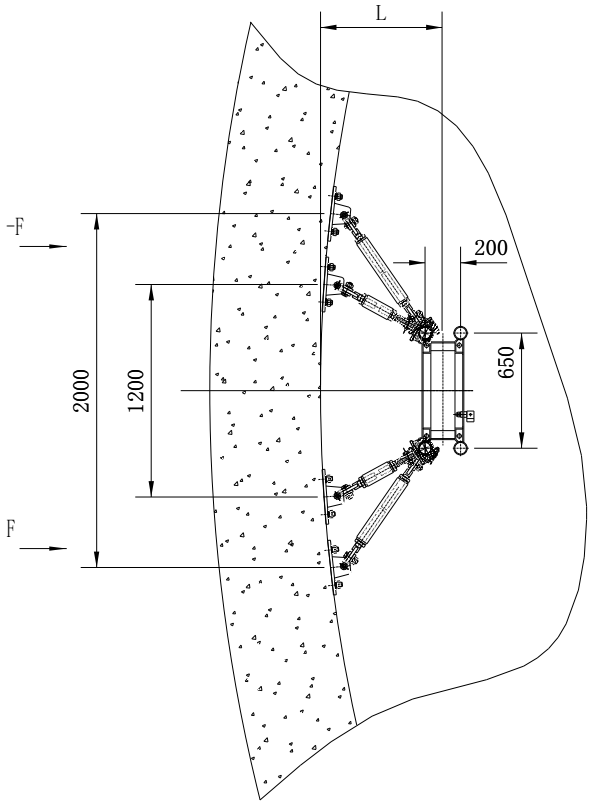

F=L/2000 *60/2.05kN

Foundation

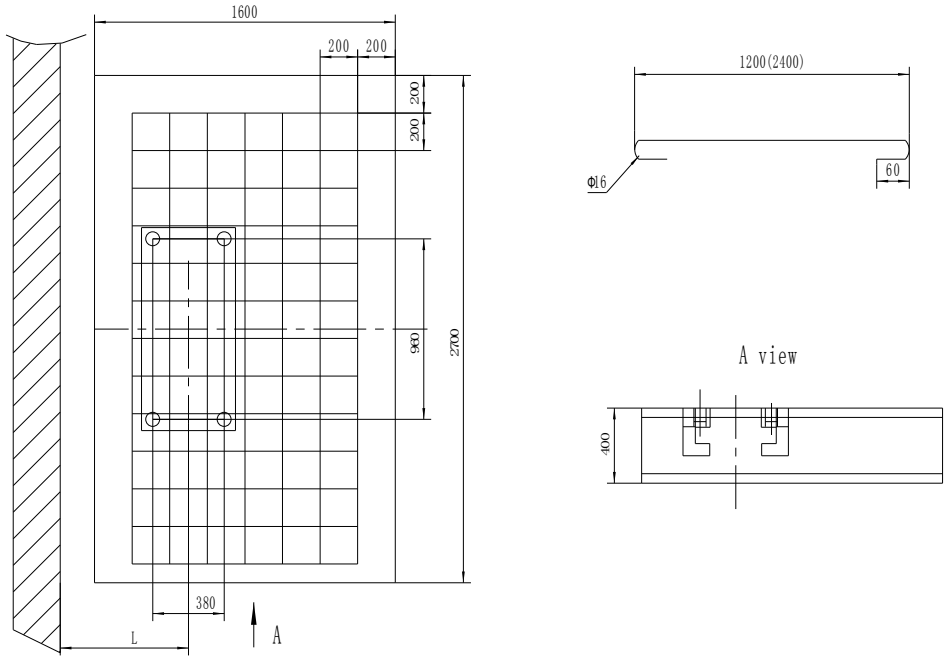

1. The load on the foundation should be more than P:

   P = (Cage + Enclosure + Mast + Counterweight + Load) × 0.02kN.

2. The ground pressure under the foundation should be more than 0.15MPa.

3. Concrete strength should not less than 300#.

4. Foundation frame must be embedded into the concrete slab.

SUN JUPITER
Sun Jupiter Co.,Ltd.
2/2 Moo.3 Or-Ngurn Saimai Bangkok 10220
Tel: 0062-9983855 , 0062-9983655
Fax: 0062-9983466