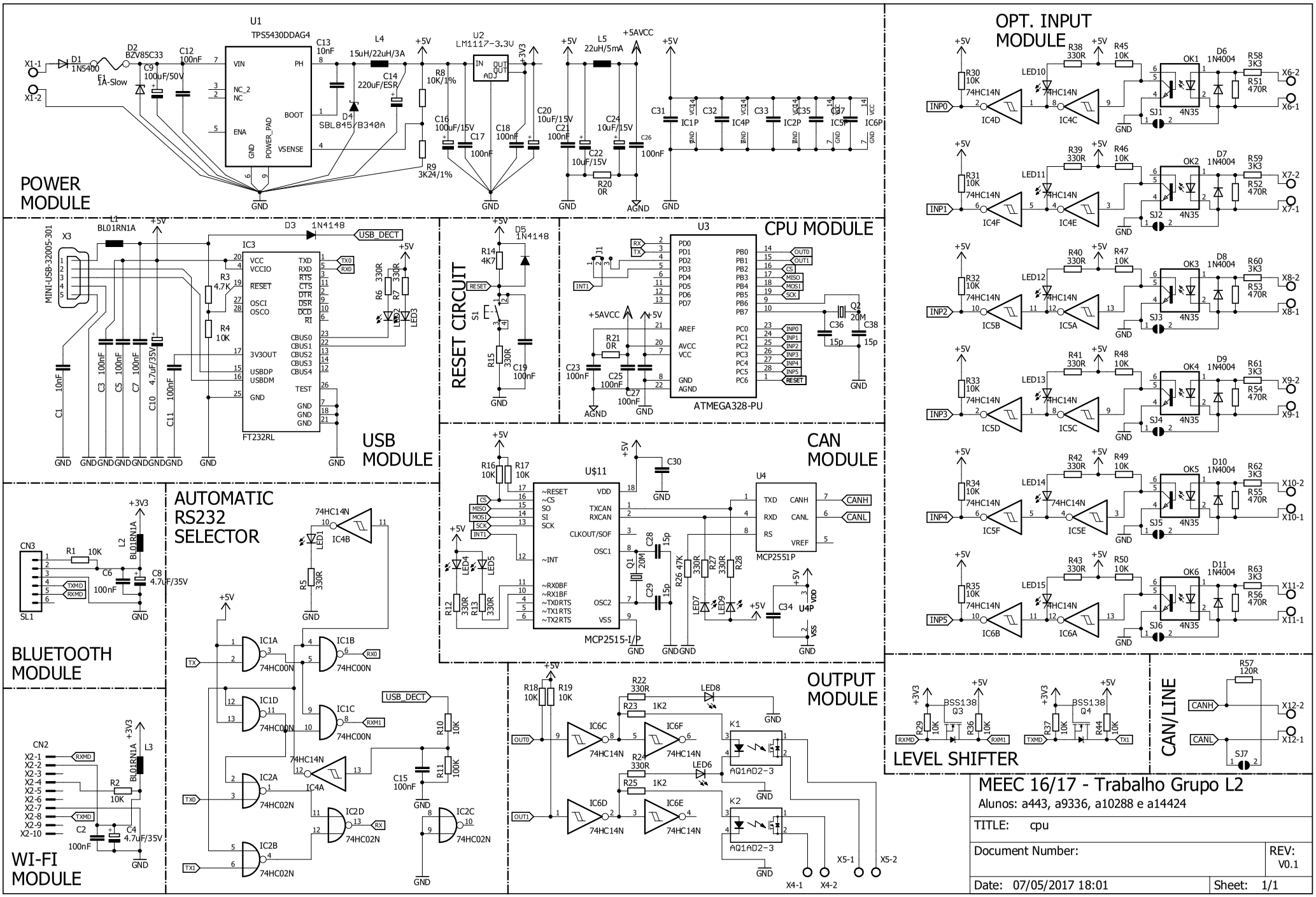
POWER MODULE
U1
TPS5430DDAG4
U2
LM1117-3.3V
USB MODULE
IC3
FT232RL
X3
MINI-USB-32005-301
RESET CIRCUIT
CPU MODULE
U3
ATMEGA328-PU
CAN MODULE
U$11
MCP2515-I/P
U4
MCP2551P
OPT. INPUT MODULE
BLUETOOTH MODULE
CN3
SL1
AUTOMATIC RS232 SELECTOR
WI-FI MODULE
CN2
OUTPUT MODULE
LEVEL SHIFTER
CAN/LINE
MEEC 16/17 - Trabalho Grupo L2
Alunos: a443, a9336, a10288 e a14424
TITLE: cpu
Document Number:
REV: V0.1
Date: 07/05/2017 18:01
Sheet: 1/1