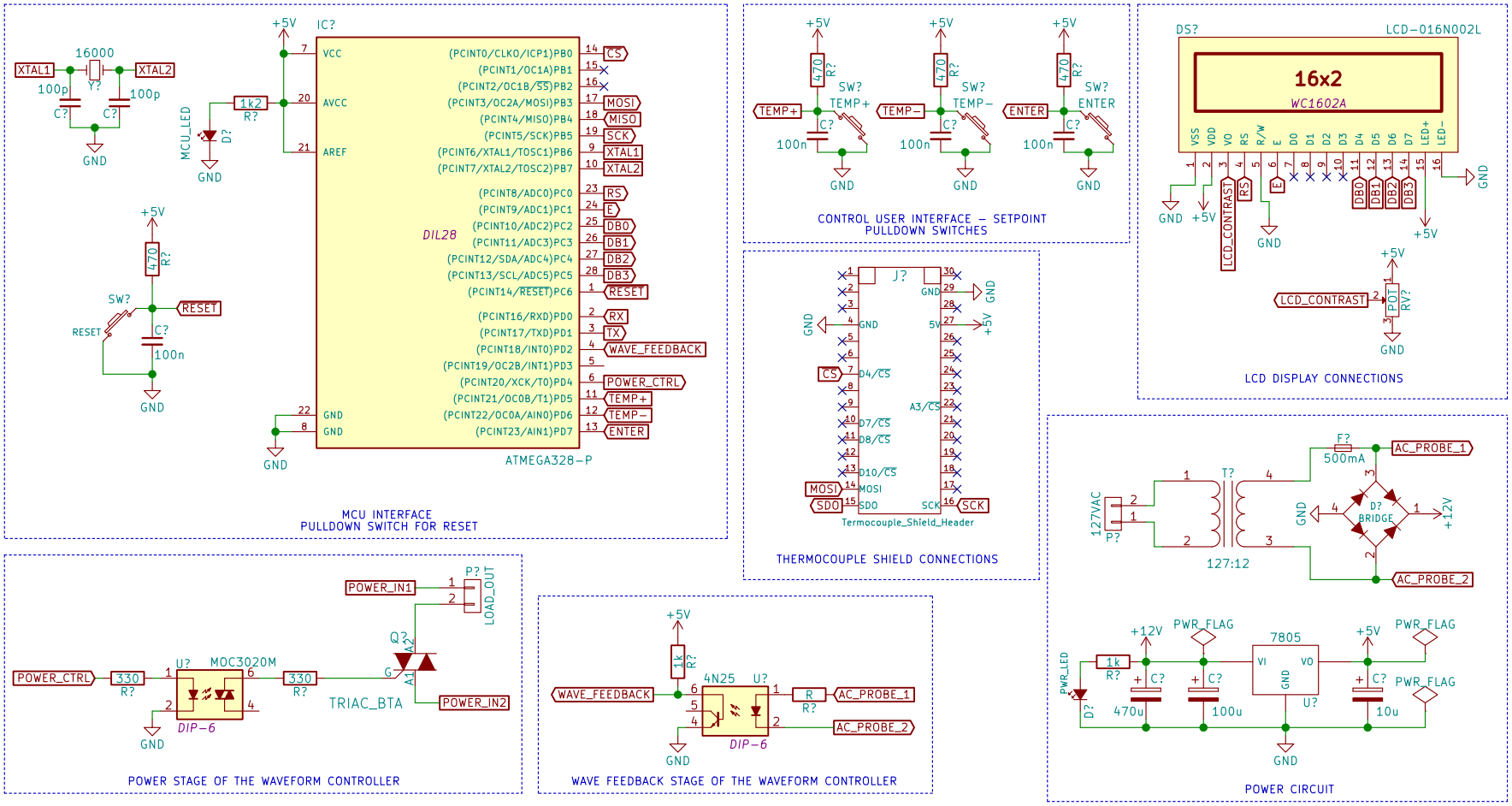

DESIGNED BY ALISSON CLAUDINO

FEDERAL UNIVERSITY OF RIO GRANDE DO SUL

Sheet: /

File: ElectricKettle.sch

Title: ELECTRIC KETTLE CIRCUIT

Size: A4	Date: 2017-11-21	Rev:
KiCad E.D.A. kicad 4.0.6-e0-634953ubuntu14.04.1		Id: 1/1