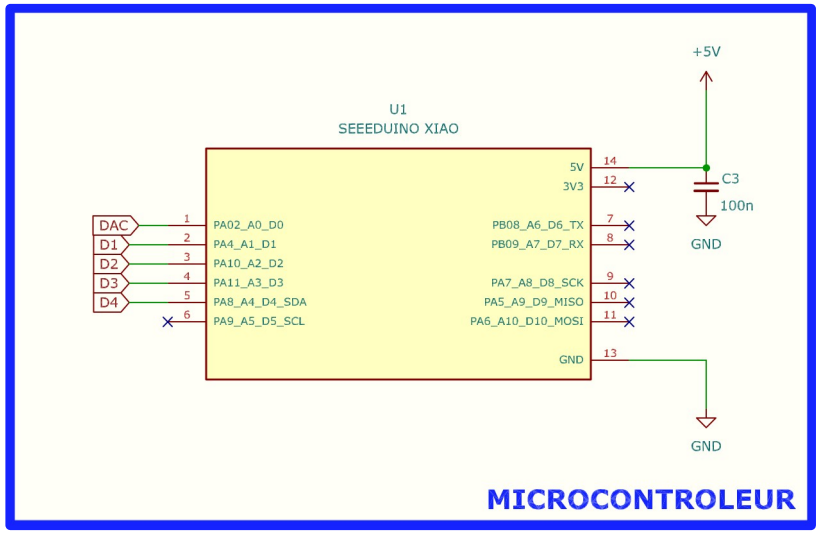

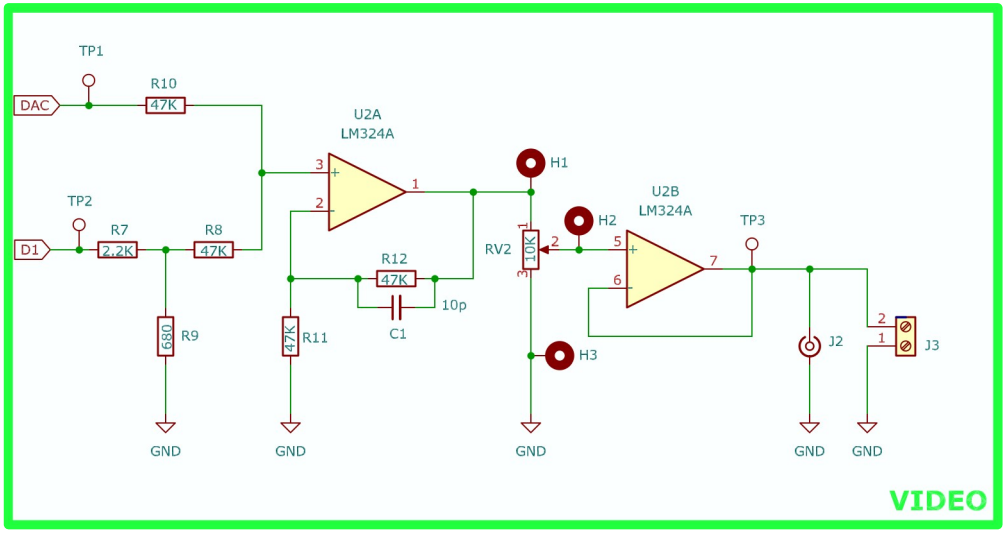

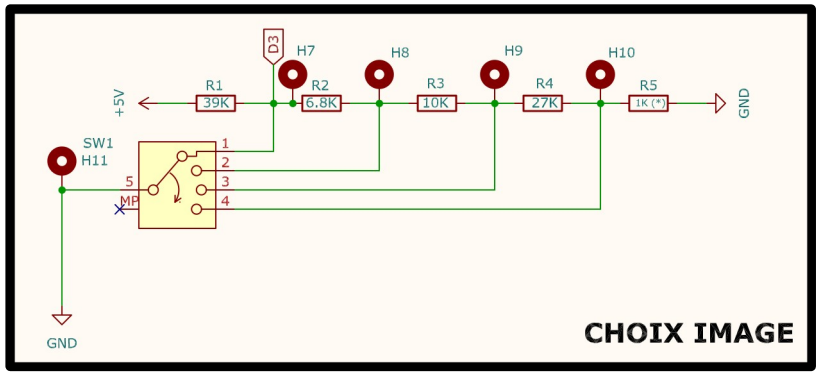

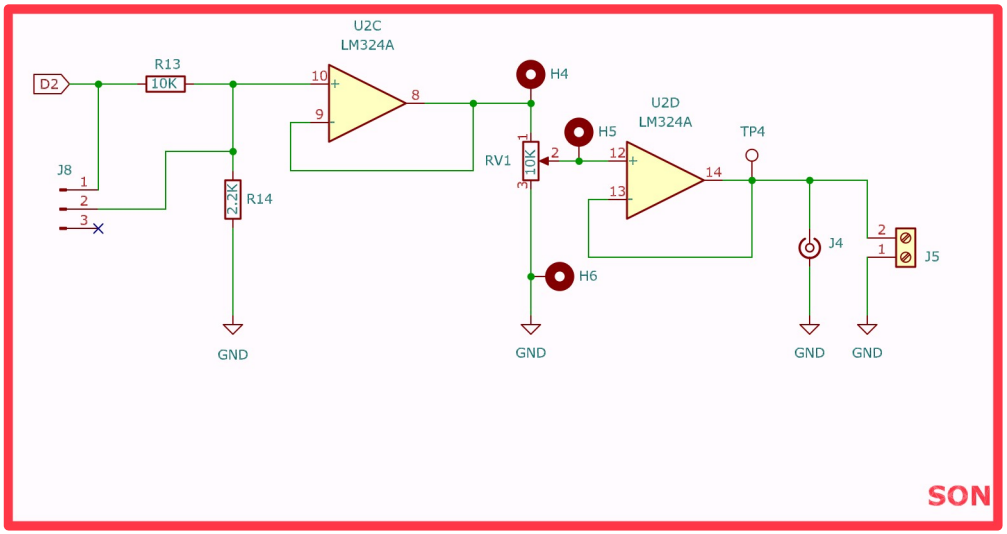

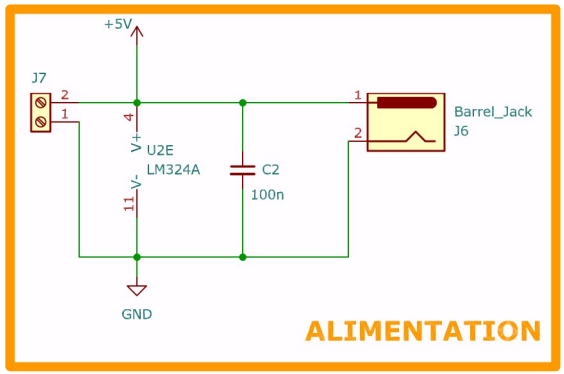

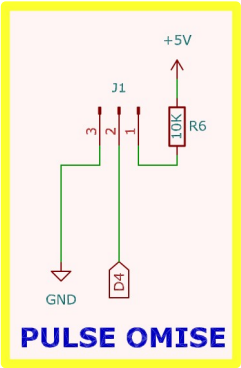

https://www.youtube.com/c/ClaudeDufourmont

https://github.com/claudiusmarius

Sheet: /		
File: MIRE NBTV DFTA206.kicad_sch		
Title:		
Size: A4	Date:	**Rev:**
KiCad E.D.A. 8.0.4		Id: 1/1